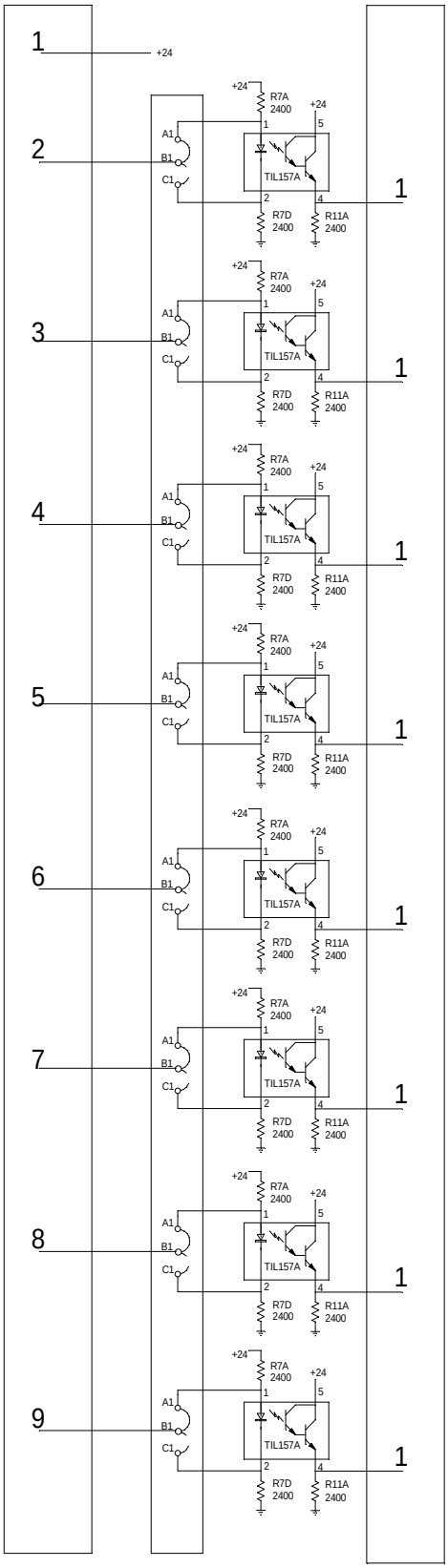
1
+24
2
3
4
5
6
7
8
9
1
+24
R7A
2400
A1
B1
C1
TIL157A
R7D
2400
R11A
2400

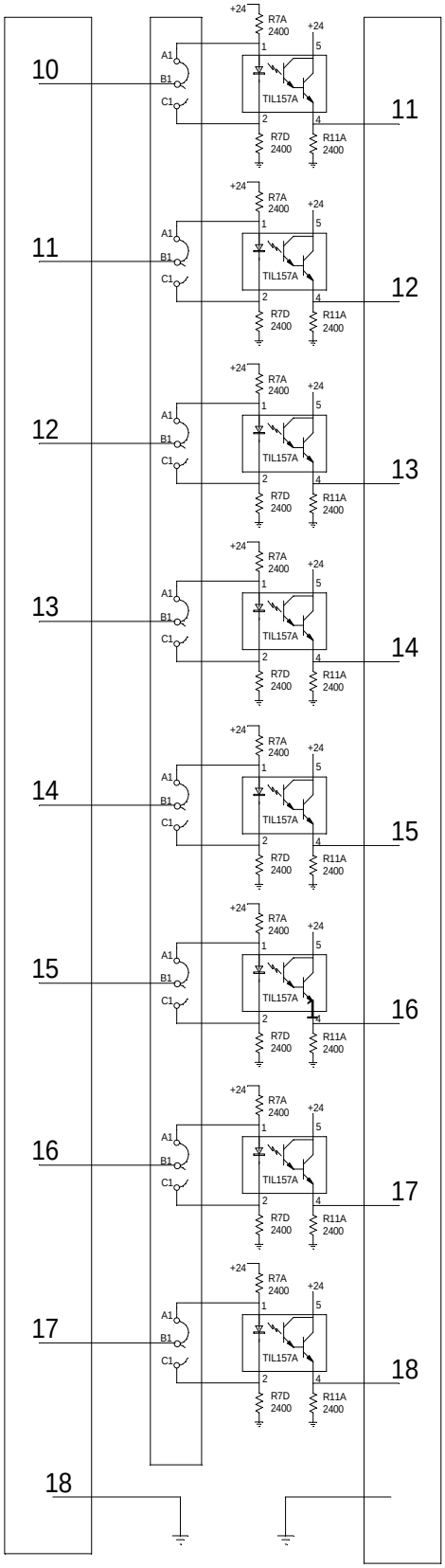
10
11
12
13
14
15
16
17
18
11
12
13
14
15
16
17
18
+24
R7A
2400
A1
B1
C1
TIL157A
R7D
2400
R11A
2400