RFI Monitor
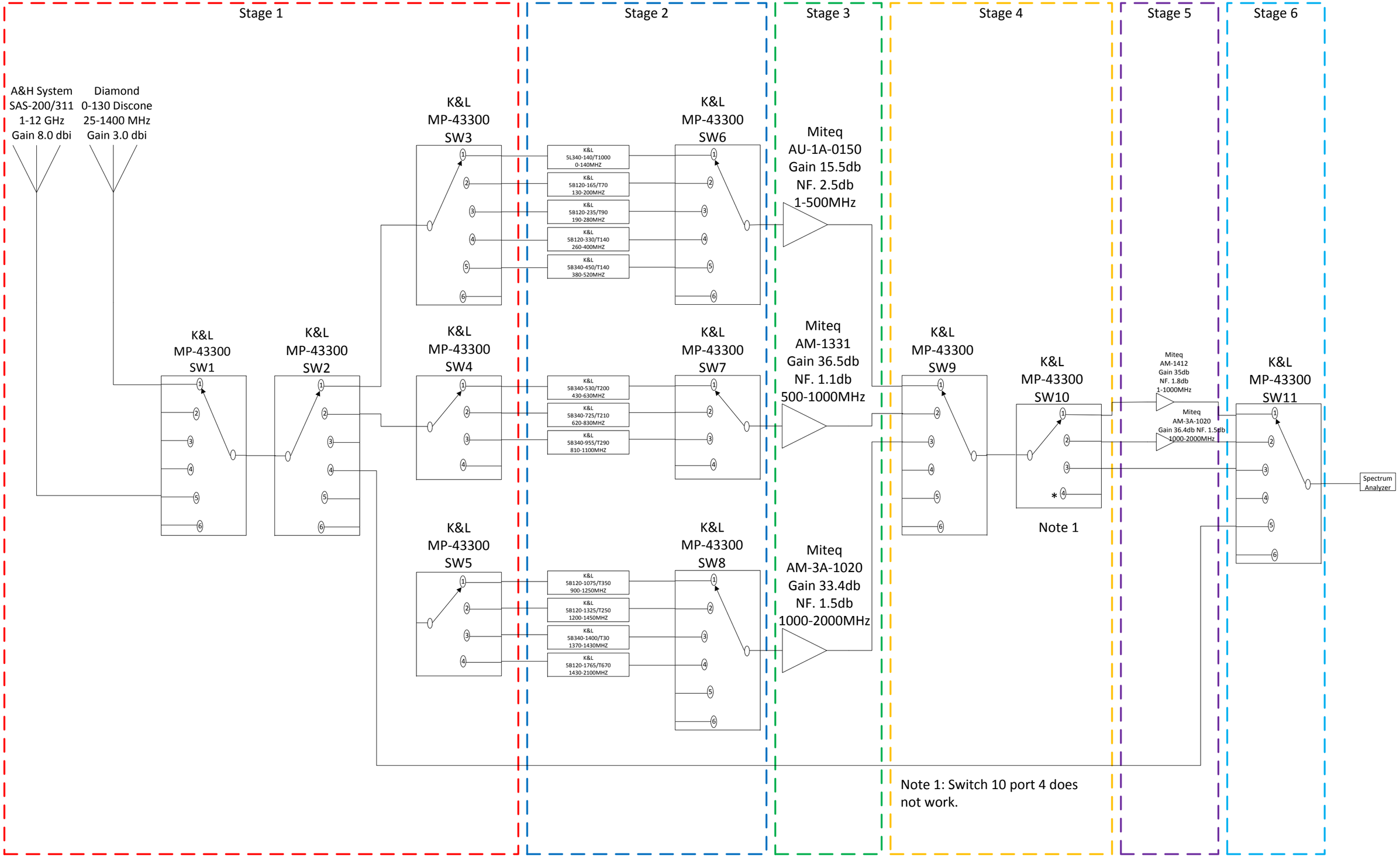
March 6, 2014