15 Amp @ 12 Volts and 12 Amp @ 24 Volts Battery Charger Kits

This instruction sheet describes the installation of the following battery chargers used with a genset or a transfer switch.

Kit	Model Voltage
Genset Kits	
300–5878–01	120, 208, 240 VAC
300–5878–02	277 VAC
300–5878–03	380 VAC
300–5878–04	416 VAC
300–5878–05	480 VAC
300–5878–06	600 VAC
Transfer Switch Installations	
300–5878–07	120, 208, 240 VAC
300–5878–08	277 VAC
300–5878–09	380 VAC
300–5878–10	416 VAC
300–5878–11	480 VAC
300–5878–12	600 VAC
Transfer Switch Kits	
300–5878–13	120, 208, 240 VAC
300–5878–14	277 VAC
300–5878–15	380 VAC
300–5878–16	416 VAC
300–5878–17	480 VAC
300–5878–18	600 VAC

The following items are included in this kit.

Part Description	Quantity	
	Genset	Transfer Switch
Battery Charger	1	1
Operator's Manual	1	1
Grommet	2	–

Read these instructions completely and become familiar with safety warnings, cautions, and procedures before starting the installation.

After the battery charger is installed, refer to the battery charger Operator's Manual for more information on using the battery charger.

WARNING ***Improper installation can result in severe personal injury, death, or damage to equipment. The installer must be trained and experienced in the installation of electrical and mechanical equipment.***

All DC connections must be performed or supervised by a trained and experienced electrician in accordance with the NEC (National Electric Code, NFPA No. 70).

Connections to the battery charger must comply with all local codes and ordinances. Guidelines for connecting and disconnecting batteries are listed on page 8.

CAUTION ***Gases or fluids from the battery can corrode and damage the charger. Never place the battery charger directly above or below the battery.***

This battery charger should be connected to a grounded, metal, permanent wiring system; or an equipment-grounding conductor should be run with circuit conductors and connected to an equipment-grounding terminal or lead on the battery charger.

WARNING ***Do not expose the battery charger to rain, snow, or other precipitation.***

GENSET INSTALLATIONS

Location

Select a mounting location that is large enough to install the battery charger (see Figure 1).

⚠WARNING ***The charger can cause sparks that can result in severe personal injury and equipment damage. Do not mount the charger near batteries, fuel tanks, or other sources of flammable or explosive gases.***

⚠CAUTION ***Gases from the battery can corrode and damage the charger. Do not mount the charger above or below the battery.***

The mounting location for the battery charger must:

- Be water proof.
- Be on a vibration-free mounting surface that will support the weight of the charger
- Not be hot, moist, or dusty. The battery charger is suitable for operation in a temperature range of −22 to +122 Degrees F (−30 to +50 Degrees C).
- Be isolated from batteries and fuel tanks and other sources of flammable or explosive gases. The charger (which can cause sparks) should be located as far away from the battery as practical.
- Allow for free air flow through the space or compartment. The battery charger has an internal cooling fan. Make sure there is no blockage of the air vents. Air flow is from right to left through the battery charger. Provide at least 2 inches (50.8 mm) of clearance to the right and left sides for good cooling air flow.
- Allow for adequate space for all electrical connections.
- Allow for easy access to remove the charger for service or replacement.
- Allow for easy access to the digital display and the circuit breaker(s).

The battery charger should be mounted on a wall or on a horizontal surface, such as a bench.

Wall Mounting

The top of the charger is drip-proof when it is wall mounted. For wall mounting, do not place the charger above the battery; gases from the battery can corrode and damage the charger.

1. Make sure that the AC power source is disconnected.
2. Check the location to be sure that no wires, plumbing, gas lines, or exhaust lines running behind the wall.
3. Position the charger on the wall.
4. Mark the location for the top two mounting holes.
5. Remove the charger and drill the mounting holes.
6. Use two 1/4” bolts to mount the charger on the wall.
7. Mark the location for the bottom two mounting holes.
8. Drill the mounting holes.
9. Use two 1/4” bolts to secure the charger to the wall.
10. Tighten the bolts.

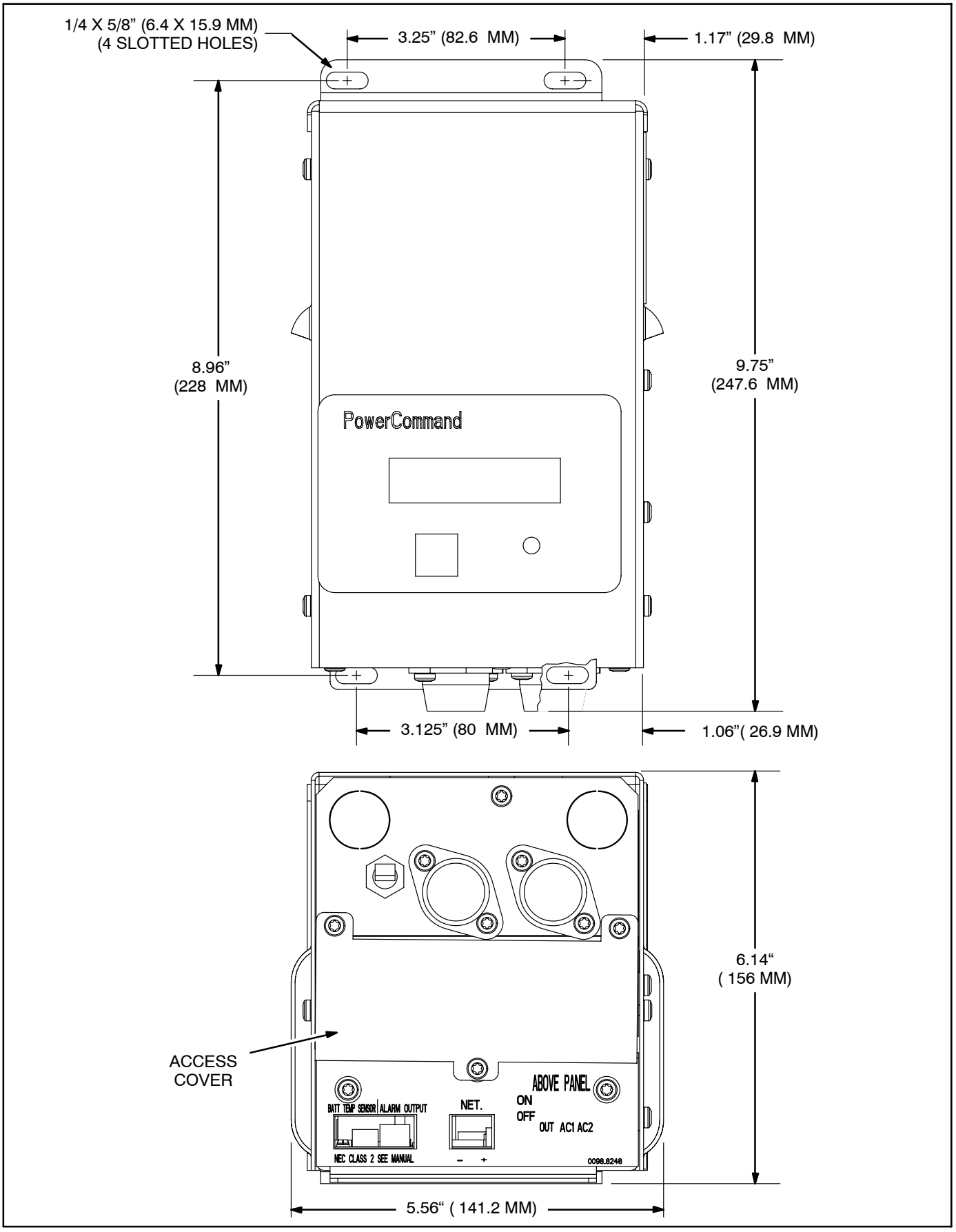

FIGURE 1. BATTERY CHARGER DIMENSIONS

Bench Mounting

For bench mounting, do not place the charger above or below the battery; gases or fluids from the battery can corrode and damage the charger.

1. Make sure that the AC power source is disconnected.
2. Position the charger on the mounting surface.
3. Mark the location for the four mounting holes.
4. Remove the charger and drill the mounting holes.
5. Reposition the charger on the mounting surface.
6. Install four 1/4” mounting bolts.
7. Tighten the bolts.

Charger Wiring

⚠WARNING ***AC voltages present an electrical shock hazard that can cause severe personal injury or death. Make sure that the AC power source is disconnected before proceeding.***

1. Make sure that the AC power source is disconnected.
2. Remove the ground (–) cable of any battery that will be connected to the charger.

   ⚠WARNING ***Ignition of explosive battery gases can cause severe personal injury and equipment damage. Do not smoke or cause any spark, arc, or flame while servicing batteries.***

3. Remove the three screws and the access cover (bottom panel) from the front of the battery charger.
4. Remove one or both of the knockouts from the front of the battery charger (see Figure 2).
5. Install grommet(s) in the opening(s).

   If necessary, remove the top panel to install the grommet(s), as described below (see Figure 3). Removing the top panel may also be beneficial for installing the wiring (see steps 6 and 7).

   a. Remove the nut(s) securing the circuit breaker switch(es) to the panel.
   b. Remove the screw securing the top panel to the battery charger. Then remove the top panel.
   c. Install the grommet(s).
   d. Use the screw to reinstall the panel.
   e. Reinstall the nut(s) on the circuit breaker switch(es).

6. Use 16 AWG or larger wire for AC connections of up to 100 feet. Feed the wires through an opening. Connect AC input wires to AC1 and AC2 of TB1 (see Figure 2).

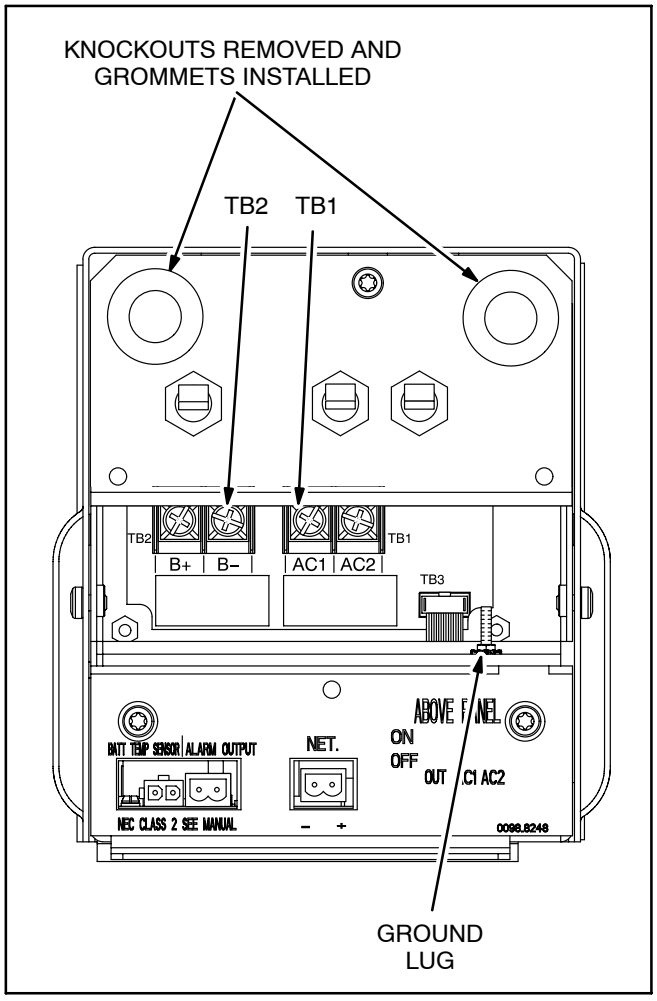

FIGURE 2. WIRING CONNECTIONS (ACCESS COVER REMOVED)

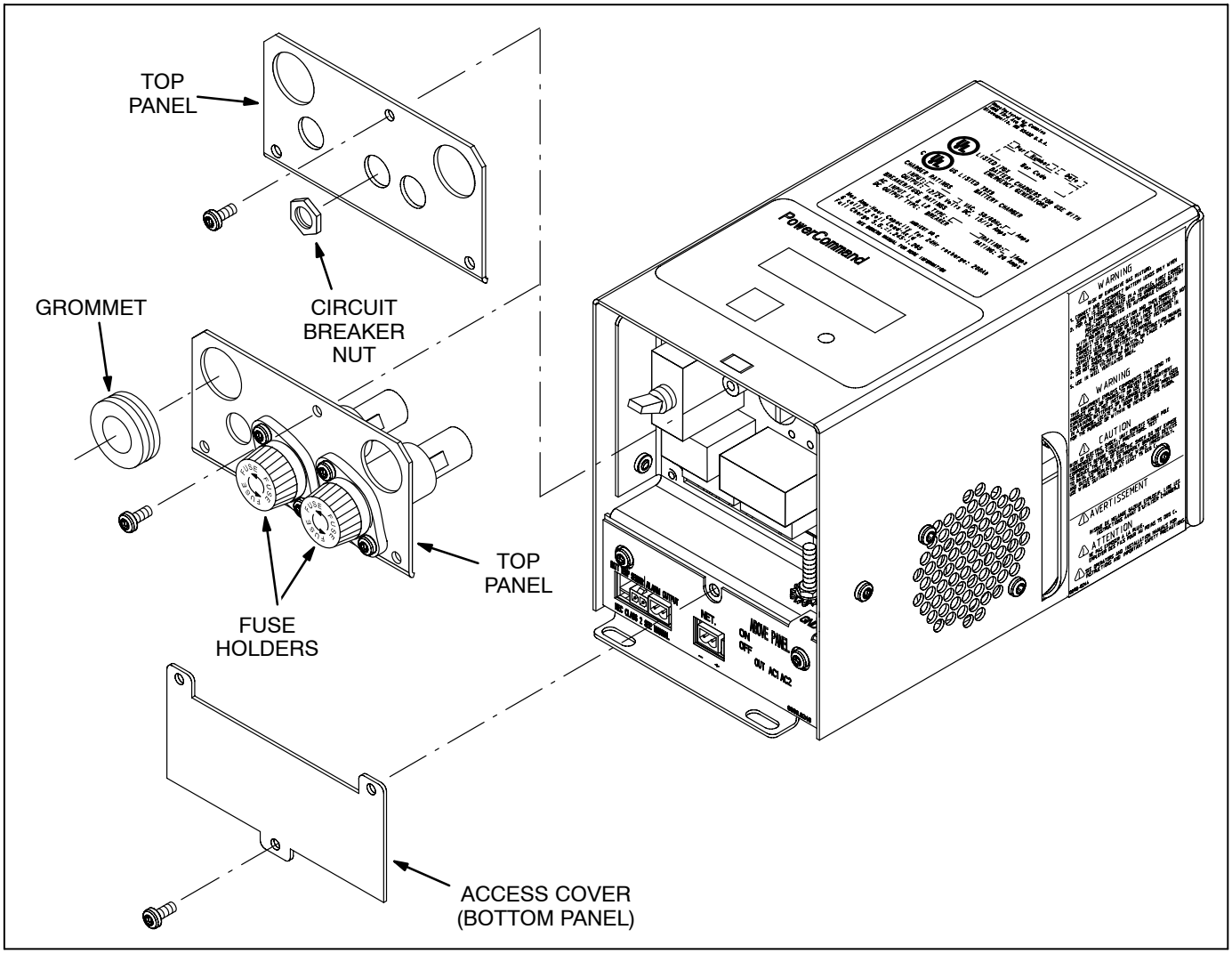

FIGURE 3. REMOVING BATTERY CHARGER PANELS

7. Install DC wiring to the battery charger.

   ⚠ CAUTION ***Undersized cables can result in additional charger stress, lower efficiency, and dimenished charger performance. Always use the recommended cable sizes. All cables must be UL and CSA certified.***

   a. Select the appropriate DC battery cable(s) for the distance between the battery charger and the batteries. If your installation must meet the NFPA110 requirement to return a fully discharged battery to 100% of its ampere-hour rating within 24 hours, see Table 1. If your installation does not need to meet the NFPA110 requirement, see Table 2.

      NOTE: Only 12 AWG or smaller cable can be installed on the battery charger terminal block. Therefore, any distances greater than 10 feet require that 10 feet of 12 AWG wiring first be installed on the terminal block and then the appropriate larger cable be attached for the remaining distance.

   b. Feed the wires selected through an opening.

   c. Connect the positive wire to B+ and the negative battery lead to B− of TB2.

8. If the battery charger is more than 10 feet from the battery, connect additional wiring to the cable installed in step 7.

9. Remove the hex nut and one of the EIT lock washer from the ground lug inside the battery charger. Feed a ground lead (16 AWG or larger)

through an opening and use the hardware to secure the lead to the ground lug (see Figure 2).

TABLE 1. RECOMMENDED DC BATTERY CABLE SIZE FOR INSTALLATIONS WITH NFPA110 BATTERY CHARGE REQUIREMENT

Distance	Gauge
1 to 3 Feet (.3048 to .9144 Meters)	14
3 to 5 Feet (.9144 to1.524 Meters)	14
5 to 10 Feet (1.524 to 3.048 Meters)	12
10 to 15 Feet (3.048 to 4.532 Meters)	12 and 10
15 to 25 Feet (4.532 to 7.62 Meters)	12 and 8
25 to 40 Feet (7.62 to 12.192 Meters)	12 and 6
40 to 60 Feet (12.192 to 18.288 Meters)	12 and 4
60 to 100 Feet (18.288 to 30.48 Meters)	12 and 2

TABLE 2. RECOMMENDED DC BATTERY CABLE SIZE FOR INSTALLATIONS WITHOUT NFPA110 BATTERY CHARGE REQUIREMENT

Distance	Gauge
1 to 20 Feet (.3048 to 6.096 Meters)	14
20 to 30 Feet (6.096 to 9.14 Meters)	12
30 to 50 Feet (9.14 to 15.24 Meters)	12 and 10
50 to 80 Feet (15.24 to 24.38 Meters)	12 and 8
80 to 125 Feet (24.38 to 38.1 Meters)	12 and 6

10. Reinstall the access cover (bottom panel).

    WARNING ***Ignition of explosive gases can cause severe personal injury and equipment damage. Do not smoke or cause any spark, arc, or flame while servicing batteries.***

    WARNING ***AC voltages present an electrical shock hazard that can cause severe personal injury or death. Take special care to avoid contact with a hot AC line.***

11. Connect AC power to the battery charger.

12. Configure the battery charger as described on the following page.

    WARNING ***Batteries can cause severe personal injury due to sparks, explosion and acid. Always connect or disconnect a battery in accordance with CONNECTING / DISCONNECTING BATTERIES (see page 8).***

13. Connect the DC output wires to the battery (negative [–] lead last). Use the torque specified in Table 3 for the terminal type used for cable connections.

TABLE 3. RECOMMENDED TORQUE VALUES

Terminal Type	Max Torque Value
SAE, Tapered Terminal Posts	50–70 in-lbs
Slide Terminals	70–90 in-lbs
Threaded Stud Terminals	120–180 in-lbs

Genset Installations With Chargers Used in Parallel

For parallel use, battery chargers should be hooked up as if each one is the only charger. A minimum of six inches of space between chargers is necessary for adequate air flow. Attach the cables for each charger at the battery terminals only. Do not hook them in series or at each others terminal blocks. Each charger needs its own set of wires running to the battery and attached at the battery. The wire lengths from each charger should be the same length. Power up all chargers at the same time.

TRANSFER SWITCH INSTALLATIONS

WARNING ***AC voltages present an electrical shock hazard that can cause severe personal injury or death. Make sure that the AC power source is disconnected before proceeding.***

1. Make sure that the AC power source is disconnected.

2. Remove the ground (–) cable of any battery that will be connected to the charger.

   WARNING ***Ignition of explosive battery gases can cause severe personal injury and equipment damage. Do not smoke or cause any spark, arc, or flame while servicing batteries.***

3. Install the battery charger inside the transfer switch cabinet. Refer to your transfer switch Installation Manual for the correct location. Mount the charger with the circuit breaker(s)/fuse holders facing down.

   NOTE: Some installations require four 10–32 x 1/2” thread-forming hex head screws be used to mount the charger. Other installations use four M5 hex huts to se-

cure the charger to the studs in the transfer switch cabinet.

⚠WARNING ***Ignition of explosive gases can cause severe personal injury and equipment damage. Do not smoke or cause any spark, arc, or flame while servicing batteries.***

⚠WARNING ***AC voltages present an electrical shock hazard that can cause severe personal injury or death. Take special care to avoid contact with a hot AC line.***

4. Connect AC power to the battery charger.

5. Configure the battery charger as described on the following page.

6. Connect the wiring harness J1 connector to the P1 connector on the transfer switch harness.

BATTERY CHARGER CONFIGURATION

The charger identification screen is displayed on the control panel for less than one second upon power-up (see Figure 4).

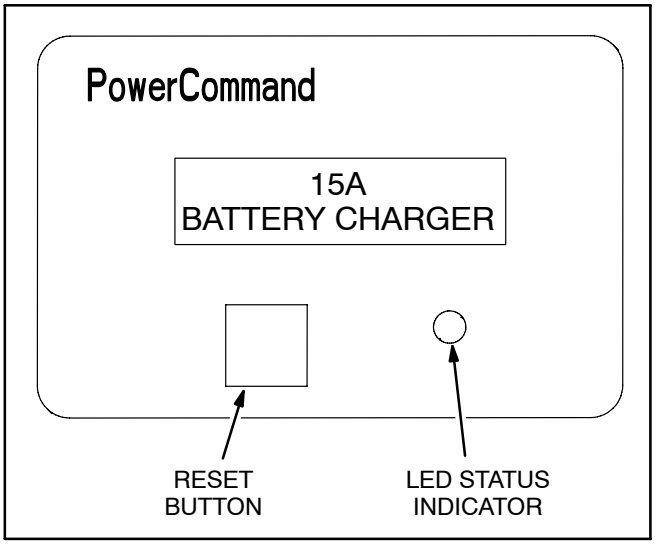

FIGURE 4. CONTROL PANEL IDENTIFICATION SCREEN

The battery charger must be configured for the correct battery voltage and type before it is connected to the battery. To configure the battery charger, press and hold the **RESET** button for two seconds to enter the Configuration Mode. Adjust the Setup menus, as necessary.

1. The first charger Setup menu displayed is for setting the battery voltage. Press the **RESET** button to change the battery voltage (12 or 24 VDC, default = 12 VDC) – see Figure 5.

SET BATTERY
VOLTAGE: 12VDC

FIGURE 5. BATTERY VOLTAGE SETUP MENU

2. Press and hold the **RESET** button for two seconds to save the setting and display the second Setup menu (Battery Type).

3. When the Battery Type Setup menu is displayed (see Figure 6), press the **RESET** button to select the battery type (Lead-Acid, Gel, or AGM, default = Lead-Acid).

SET BATT TYPE:
Lead-Acid

FIGURE 6. BATTERY TYPE SETUP MENU

4. Press the and hold the **RESET** button for two seconds to save the setting.

5. If the battery type selected is lead-acid and it is completely charged, the Equalize Battery screen is displayed (see Figure 7).

EQUALIZE
BATTERY!

FIGURE 7. EQUALIZE BATTERY SCREEN

6. Press the **RESET** button and release it immediately to begin equalize. The LED status indicator turns amber.

NOTE: To skip over the Equalize Battery! menu, press and hold the **RESET** button until normal operation commences. Equalize can be stopped by pressing the **RESET** button for two seconds (re-entering Setup) or by powering down the battery charger.

CONNECTING / DISCONNECTING BATTERIES

Always First Disconnect AC Power and DC Loads

To keep sparks from igniting explosive battery gases, always disconnect AC power to the battery charger and turn off all DC loads before disconnecting the battery cables.

⚠WARNING ***Battery acid can cause severe burns. Always wear safety glasses and protective clothing when working with batteries. If acid gets in your eyes or on your skin, flush with water for 15 minutes and get medical attention.***

⚠WARNING ***Remove hanging jewelry, rings and bracelets before working on batteries. They can short and weld to battery terminals causing severe burns.***

⚠WARNING ***Lead-Acid Batteries produce explosive hydrogen gas that can lead to severe personal injury—Do not smoke near batteries—To reduce sparking, always disconnect AC power to the battery charger, turn off all DC loads before disconnecting the battery cables and observer the Proper Battery Terminal Connection / Disconnection Sequence below.***

Always Observe Proper Battery Terminal Connection / Disconnection Sequence

The high capacitance of the battery charger can cause sparking whenever the battery cables are disconnected or reconnected. This is normal, do not be alarmed. Take the following precautions:

7. Do not disconnect or reconnect the battery charger when fuel fumes are present.
8. ***To keep sparking away from the batteries when disconnecting battery cables:***
   a. Disconnect the negative (–) cable from the battery charger and then the batteries,
   b Disconnect the positive (+) cable from the battery charger and then the batteries.
9. ***To keep sparking away from the batteries when reconnecting battery cables:***
   a. Reconnect the positive (+) cable at the Batteries and then at the battery charger,
   b. Reconnect the negative (–) cable at the batteries and then at the battery charger.

Always Observe Proper Battery Polarity

Always observe battery polarity when making battery connections to the battery charger. Positive (+) must always be connected to Positive (+) and Negative (–) to Negative (–).

⚠CAUTION ***Damage as a result of reverse polarity is not covered under Warranty.***