SEL-300G
Multifunction Generator Relay

Instruction Manual

20081231

SEL® SCHWEITZER ENGINEERING LABORATORIES, INC.

CAUTION: Be sure to follow the generator and prime mover manufacturers' guidelines with respect to generator operation and commissioning.

CAUTION: Do not apply reverse polarity dc voltage or ac voltage to terminals Z25 and Z26 of SEL-300G Relays rated for 24/48 Vdc applications. Relay failure and permanent power supply damage will result from application of reverse polarity dc voltage to relays rated for 24/48 Vdc applications.

CAUTION: Standard SEL relay output contacts are rated to make and carry trip coil current, but are **not** rated to interrupt trip coil current. Do not exceed the contact interrupt ratings shown in ***Relay Specifications and Options***.

CAUTION: The relay contains devices sensitive to electrostatic discharge (ESD). When working on the relay with front or top cover removed, work surfaces and personnel must be properly grounded or equipment damage may result.

CAUTION: Synchronism checking requirements and practices vary widely for different prime mover types. Be sure to consult your prime mover manufacturer's synchronism checking guidelines as you prepare these settings or severe equipment damage or loss of equipment life may result.

CAUTION: There is danger of explosion if the battery is incorrectly replaced. Replace only with Ray-O-Vac® no. BR2335 or equivalent recommended by manufacturer. Dispose of used batteries according to the manufacturer's instructions.

WARNING: This device is shipped with default passwords. Default passwords should be changed to private passwords at installation. Failure to change each default password to a private password may allow unauthorized access. SEL shall not be responsible for any damage resulting from unauthorized access.

DANGER: Removal of relay front panel exposes circuitry which may cause electrical shock that can result in injury or death.

DANGER: Contact with this circuitry may cause electrical shock that can result in injury or death.

DANGER: Contact with instrument terminals may cause electrical shock which can result in injury or death.

ATTENTION: Suivez attentivement les instructions des manufacturiers de la turbine et de la génératrice pour la réception, la mise en route et l'opération.

ATTENTION: N'appliquer pas un voltage CC avec polarité inversée ou un voltage CA, sur les bornes Z35 et Z26 des relais 300G dont la tension d'alimentation nominale est 24/48 VCC. Une perte de fonctionnement du relais et un bris permanent de l'alimentation résulteraient de l'application d'une polarité CC inversée sur un relais avec tension nominale de 24/48 VCC.

ATTENTION: Les contacts standards des relais SEL ont la capacité de fermer sur le courant spécifié des bobines d'ouverture mais ne peuvent ouvrir sur le même courant. Il est important de ne pas dépasser les capacités des contacts indiquées an paragraphe ***Spécifications du Relais et Options***.

ATTENTION: Le relais contient des pièces sensibles aux décharges électrostatiques. Quand on travaille sur le relais avec les panneaux avant ou du dessus enlevés, toutes les surfaces et le personnel doivent être mis à la terre convenablement pour éviter les dommages à l'équipement.

ATTENTION: Les exigences et les pratiques de vérification de synchronisme peuvent varier beaucoup selon les types de turbine. Avant de préparer ces réglages, il faut analyser les directives du fabricant de turbine concernant la vérification de synchronisme, pour éviter tout dommage important ou altération de la vie utile d'équipement.

ATTENTION: Il y a un danger d'explosion si la pile électrique n'est pas correctement remplacée. Utiliser exclusivement Ray-O-Vac® No. BR2335 ou un équivalent recommandé par le fabricant. Se débarrasser des piles usagées suivant les instructions du fabricant.

AVERTISSEMENT: Cet appareil est expédié avec des mots de passe par défaut. A l'installation, les mots de passe par défaut devront être changés pour des mots de passe confidentiels. Dans le cas contraire, un accès non-autorisé à l'équipement pourrait être possible. SEL décline toute responsabilité pour tout dommage résultant de cet accès non-autorisé.

DANGER: Le retrait du panneau avant expose à la circuiterie qui pourrait être la source de chocs électriques pouvant entraîner des blessures ou la mort.

DANGER: Le contact avec la circuiterie peut causer un choc électrique pouvant entraîner des blessures ou la mort.

DANGER: Le contact avec les bornes de l' instrument peut causer un choc électrique pouvant entraîner des blessures ou la mort.

© 1998-2008 by Schweitzer Engineering Laboratories, Inc. All rights reserved.

All brand or product names appearing in this document are the trademark or registered trademark of their respective holders. No SEL trademarks may be used without written permission. SEL products appearing in this document may be covered by US and Foreign patents.

Schweitzer Engineering Laboratories, Inc. reserves all rights and benefits afforded under federal and international copyright and patent laws in its products, including without limitation software, firmware, and documentation.

The information in this manual is provided for informational use only and is subject to change without notice. Schweitzer Engineering Laboratories, Inc. has approved only the English language manual.

This product is covered by the standard SEL 10-year warranty. For warranty details, visit www.selinc.com or contact your customer service representative.

PM300G-01

SEL-300G INSTRUCTION MANUAL
TABLE OF CONTENTS

SECTION 1: INTRODUCTION AND SPECIFICATIONS

SECTION 2: RELAY ELEMENT SETTINGS

SECTION 3: AUXILIARY FUNCTION SETTINGS

SECTION 4: SELOGIC CONTROL EQUATIONS

SECTION 5: INSTALLATION

SECTION 6: ENTER RELAY SETTINGS

SECTION 7: RELAY COMMISSIONING

SECTION 8: MONITORING AND METERING FUNCTIONS

SECTION 9: FRONT-PANEL OPERATIONS

SECTION 10: SERIAL PORT COMMUNICATIONS AND COMMANDS

SECTION 11: EVENT REPORTS AND SER FUNCTIONS

SECTION 12: MAINTAIN AND TROUBLESHOOT RELAY

SECTION 13: DIFFERENTIAL ELEMENT SETTINGS

SECTION 14: APPENDICES

- Appendix A: Firmware and Manual Versions
- Appendix B: Firmware Upgrade Instructions
- Appendix C: SEL Distributed Port Switch Protocol (LMD)
- Appendix D: Configuration, Fast Meter, and Fast Operate Commands
- Appendix E: Compressed ASCII Commands
- Appendix F: Modbus RTU Communications Protocol
- Appendix G: ACSELERATOR QuickSet SEL-5030 Software
- Appendix H: Differential Connection Diagrams
- Appendix I: Unsolicited Fast SER Protocol

SECTION 15: SEL-300G RELAY COMMAND SUMMARY

TABLE OF CONTENTS

SECTION 1: INTRODUCTION AND SPECIFICATIONS 1-1

Overview 1-1
Instruction Manual Sections Overview 1-2
Typographic Conventions 1-4
SEL-300G Relay Models 1-4
SEL-300G Relay Protection Applications 1-6
- Complete Generator Primary Protection 1-6
- Feature-Rich Generator Backup Protection 1-7
- Protection for Small- and Medium-Sized Machines 1-7
- Solidly Grounded Machine Protection 1-8
- Thermal Protection of Generator and Prime Mover 1-8
- Field Ground Protection of Generator 1-8

SEL-300G Relay Generator Protection Features 1-9
SEL-300G Relay Additional Features 1-10
Contact I/O Application 1-10
- Available Contact Input/Output Options 1-10
- Power Supply and Optoisolated Input DC Voltages 1-11

Serial Communication Connections (typical) 1-12
- SEL-5801 Cable Selector Software 1-13

Relay Specifications and Options 1-13
- General 1-13
- Processing Specifications 1-15
- Relay Element Setting Ranges and Accuracies 1-15

TABLES

Table 1.1: SEL-300G Relay Instruction Manual Task Map 1-1
Table 1.2: SEL-300G Relay Models 1-4
Table 1.3: SEL-300G Relay Hardware Models 1-5
Table 1.4: SEL-300G Requirements for Field Ground Protection Functionality 1-9

FIGURES

Figure 1.1: Large Generator Primary and Backup Protection 1-6
Figure 1.2: Generator Differential Zone May Include Transformer 1-7
Figure 1.3: Simple Protection for Resistance Grounded Generators 1-7
Figure 1.4: Generator Thermal Protection With SEL-2600 Series RTD Module and SEL-300G 1-8
Figure 1.5: Field Ground Protection With the SEL-300G Relay 1-9
Figure 1.6: SEL-300G Relay Communication Connection Examples 1-12

SECTION 1: INTRODUCTION AND SPECIFICATIONS

OVERVIEW

This instruction manual covers the SEL-300G Relay family. This manual contains the information you need to select, set, install, test, operate, and maintain any SEL-300G Relay. You probably will not need to review the whole book to perform the specific tasks for which you are responsible. Table 1.1 should help you refer to the best SEL-300G Relay Instruction Manual section for the tasks you need to perform.

Table 1.1: SEL-300G Relay Instruction Manual Task Map

Task	Refer to Instruction Manual Sections
Select a Relay Model	***Section 1: Introduction and Specifications***; SEL 300G Relay Models
Design the Installation	***Section 5: Installation***; Example AC and DC Connection Diagrams ***Appendix H: Differential Connection Diagrams***
Calculate Relay Element Settings	***Section 2: Relay Element Settings*** ***Section 13: Differential Element Settings*** ***Section 6: Enter Relay Settings; Setting Sheets***
Create SELOGIC® Control Equations Settings, Tripping, Closing, and Synch-Check Settings	***Section 4: SELOGIC Control Equations***
Create Demand Meter, DC Monitor, Setting Group Selection, Breaker Monitor, and Sequential Events Recorder (SER) Function Settings	***Section 3: Auxiliary Function Settings***
Install the Relay	***Section 5: Installation*** ***Section 7: Relay Commissioning***
Enter Relay Settings	***Section 6: Enter Relay Settings*** ***Section 9: Front-Panel Operation*** ***Section 10: Serial Port Communications and Commands***
Commission Test the Relay	***Section 7: Relay Commissioning***
Operate the Relay	***Section 8: Monitoring and Metering Functions*** ***Section 9: Front-Panel Operation*** ***Section 11: Event Reports and SER Functions*** ***Section 12: Maintain and Troubleshoot Relay***

INSTRUCTION MANUAL SECTIONS OVERVIEW

The following is an overview of the other sections in this instruction manual:

Section 2: Relay Element Settings describes the relay generator protection elements, their logic and operating characteristics, and the calculation of their settings.

Section 3: Auxiliary Function Settings describes the operation and settings of:

- Demand meter function
- Station dc monitor function
- Setting group selection function
- Breaker monitor function
- Optoisolated input debounce timers
- SER trigger and alias settings

Section 4: SELOGIC Control Equations describes the operation of:

- SELOGIC control equations
- Latch control switches
- General trip logic and generator tripping, with examples
- Close logic
- Synchronism checking function
- Local and remote control switches
- Front-panel display configuration
- Inadvertent energization settings
- Protection alarms
- Relay self-test alarms
- Breaker failure protection
- Tables detailing all Relay Word bits, their definitions and applications

Section 5: Installation describes:

- How to mount and wire the SEL-300G
- Connections for numerous applications
- Explanation of circuit board jumpers
- SEL-300G front- and rear-panel drawings

Section 6: Enter Relay Settings explains:

- How to enter settings via the serial ports or front panel.
- Contains ***Settings Sheets*** for general relay, SELOGIC control equation, global, SER, and serial port settings. The ***Settings Sheets*** are single-sided and can be photocopied and filled out to set the SEL-300G. Note that these sheets correspond to the serial port **SET** commands listed in Table 6.1.

Section 7: Relay Commissioning describes:

- Commissioning test philosophy and detailed procedure
- Detailed protection element test procedures

Section 8: Monitoring and Metering Functions describes the operation of:

- Generator operating statistics function
- Breaker monitor
- Differential metering
- Station dc battery monitor function
- Energy and maximum/minimum metering

Section 9: Front-Panel Operation explains how to enter settings and also contains the following setting reference information:

- Front-panel target LEDs
- Front-panel pushbuttons and correspondence to serial port commands
- Local control switches (local bit outputs LB1 through LB8)
- Rotating default displays

Section 10: Serial Port Communications and Commands describes:

- Serial port connector pinout/terminal functions
- Communications cables
- Communications protocol
- Serial port commands

Section 11: Event Reports and SER Functions describes:

- Standard 15-, 30-, 60-, and 180-cycle event reports
- Sequential Events Recorder (SER) report
- Synchronism checking reports

Section 12: Maintain and Troubleshoot Relay describes:

- Relay maintenance testing philosophy
- Relay troubleshooting

Section 13: Differential Element Settings describes:

- Generator differential protection elements
- Logic and operating characteristics
- Settings calculation

Appendices contains the following appendices:

- ***Appendix A: Firmware and Manual Versions***
- ***Appendix B: Firmware Upgrade Instructions***
- ***Appendix C: SEL Distributed Port Switch Protocol***
- ***Appendix D: Configuration, Fast Meter, and Fast Operate Commands***
- ***Appendix E: Compressed ASCII Commands***
- ***Appendix F: Modbus RTU Communications Protocol***
- ***Appendix G: ACSELERATOR QuickSet SEL-5030 Software***
- ***Appendix H: Differential Connection Diagrams***
- ***Appendix I: Unsolicited Fast SER Protocol***

SEL-300G Relay Command Summary briefly describes the serial port commands that are described in detail in ***Section 10: Serial Port Communications and Commands***.

TYPOGRAPHIC CONVENTIONS

- In this manual, commands you type appear in bold/uppercase: **OTTER**.
- Computer keys you press appear in bold/brackets: **<Enter>**.
- Examples of relay serial port command responses look like:

```
=>
```

- Examples of information that can appear in the relay front-panel LCD display look like:

```
GEN SHUTDOWN  ←→
Position:  RETURN
```

- Sections of this instruction manual are shown in bold italics: ***Section 1: Introduction and Specifications***.

SEL-300G RELAY MODELS

This instruction manual covers the following SEL-300G models:

Table 1.2: SEL-300G Relay Models

Model	Synch-Check	Differential Protection	SEL-2600 Series Compatible	Modbus® Protocol	Voltage Inputs	Current Inputs
0300G0	No	87N	No	Optional	VA, VB, VC, VN or VAB, VCB, VN	IA, IB, IC, IN
0300G1	No	87	Optional	Optional	VA, VB, VC, VN or VAB, VCB, VN	IA, IB, IC, IN IA87, IB87, IC87
0300G2	Yes	87N	Optional	Optional	VA, VB, VC, VN, VS or VAB, VCB, VN, VS	IA, IB, IC, IN
0300G3	Yes	87	Optional	Optional	VA, VB, VC, VN, VS or VAB, VCB, VN, VS	IA, IB, IC, IN IA87, IB87, IC87

Table 1.3: SEL-300G Relay Hardware Models

Model	Mounting Type	Rack Unit Height	(I/O)[a]	Rear-Panel Connection Type	Output Contact Type	Reference Figures
0300G_0H	Rack	2U	6/8	screw-terminal block	standard	5.1, 5.2, 5.4–5.7
0300G_03	Panel	2U	6/8	screw-terminal block	standard	5.1, 5.3, 5.4–5.7
0300G_1H	Rack	3U	6/8 8/12	screw-terminal block screw-terminal block	standard standard or high current interrupting	5.1, 5.2, 5.4–5.7
0300G_13	Panel	3U	6/8 8/12	screw-terminal block screw-terminal block	standard standard or high current interrupting	5.1, 5.3, 5.4–5.7
0300G_WH	Rack	2U	6/8	Connectorized®	standard	5.1, 5.2, 5.8–5.11
0300G_W3	Panel	2U	6/8	Connectorized	standard	5.1, 5.3, 5.8–5.11
0300G_YH	Rack	3U	6/8 8/12	Connectorized Connectorized	standard standard or high current interrupting	5.1, 5.2, 5.8–5.11
0300G_Y3	Panel	3U	6/8 8/12	Connectorized Connectorized	standard standard or high current interrupting	5.1, 5.3, 5.8–5.11

[a]Number of Optoisolated Input/Output Contacts

The model numbers in Table 1.2 and Table 1.3 are only part of the actual ordering number—enough to distinguish one model type from another. To obtain the appropriate relay ordering number, see the latest SEL-300G Model Option Table at www.selinc.com, under SEL Literature, Ordering Information (Model Option Table).

Throughout this instruction manual, when differences among the SEL-300G models in Table 1.3 are explained, model numbers are referenced for clarity.

SEL-300G RELAY PROTECTION APPLICATIONS

Complete Generator Primary Protection

When ordered with the optional differential elements, the SEL-300G provides a full complement of primary protection elements for large machines. The relay is built on the field-proven SEL-300 Series Relay platform, known for secure, dependable, high-performance protection.

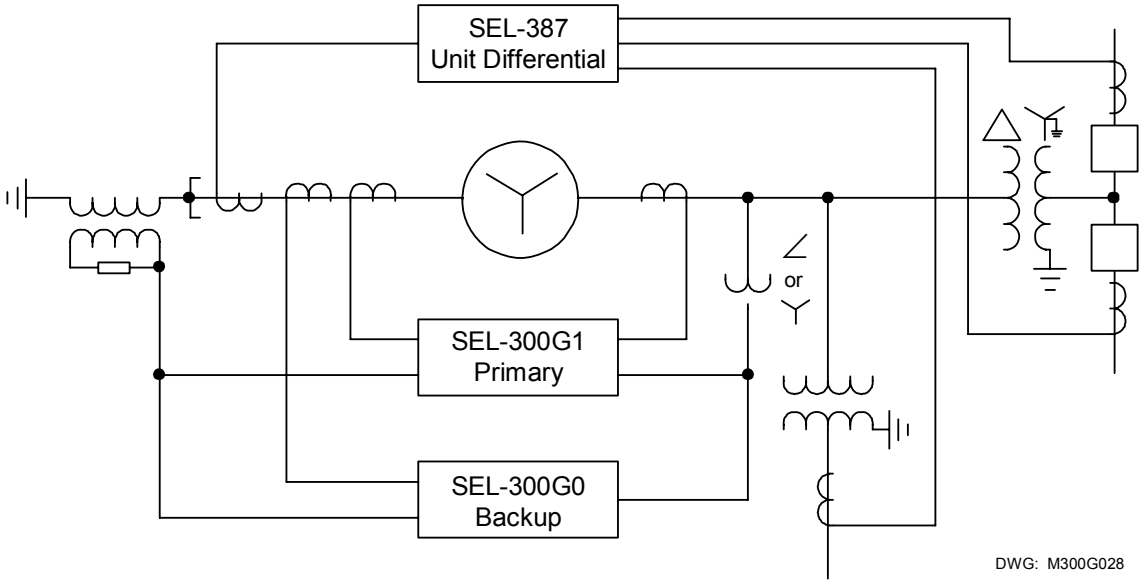

Figure 1.1: Large Generator Primary and Backup Protection

In these applications, three- or four-wire potentials and three-phase currents are applied to the relay for principal protection and metering functions. When differential protection is included, three additional phase current measurements are required.

Neutral voltage for 100 percent stator ground protection is taken from the secondary of the grounding transformer. The SEL-300G neutral voltage input is rated for application up to 300 Vac, which means that, for most applications, an auxiliary voltage transformer will not be necessary between the grounding transformer secondary and this relay.

In applications where neutral overcurrent protection is desired, the SEL-300G neutral current input, IN, may be connected to the secondary of a neutral current transformer. This transformer may be located in the generator neutral or connected in the secondary circuit of the grounding transformer. In solidly grounded or resistance grounded applications, the SEL-300G0 and SEL-300G2 Relays offer ground differential (87N) protection.

Feature-Rich Generator Backup Protection

When purchased without the differential elements, the SEL-300G makes a perfect backup relay for large machines. The relay offers 100 percent stator ground fault protection, over- and underexcitation detection, and reverse-power protection in an inexpensive, integrated relay. Frequency elements, voltage-restrained overcurrent elements, and a host of other elements and functions round out the package.

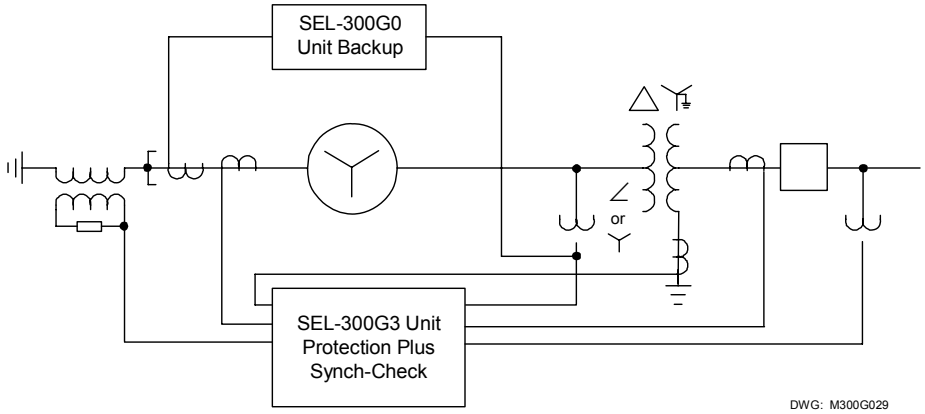

Figure 1.2: Generator Differential Zone May Include Transformer

Protection for Small- and Medium-Sized Machines

With or without the differential elements, you get large-machine protection, monitoring, and control that is priced for application on nearly any size machine. The SEL-300G offers you the freedom to benefit from integrated protection, SER and event reporting, high-accuracy metering, and breaker and dc monitoring functions without the installation and maintenance expense of purchasing those components individually.

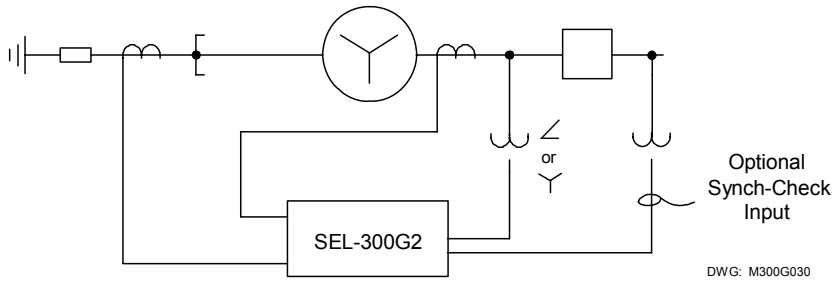

Figure 1.3: Simple Protection for Resistance Grounded Generators

In resistance-grounded machine protection applications, 100 percent stator ground fault coverage may be obtained by connecting a properly rated voltage transformer to the machine neutral point and applying the secondary voltage to the SEL-300G neutral voltage input, VN.

Solidly Grounded Machine Protection

The SEL-300G is suitable to protect solidly grounded machines, with the exception that the relay does not provide 100 percent stator ground fault protection for these machines. Phase, negative-sequence, and neutral overcurrent fault detection methods, plus optional differential overcurrent protection, are provided. Abnormal operating condition protection, such as loss-of-field, antimotoring, and overexcitation protection, is also provided.

Thermal Protection of Generator and Prime Mover

The SEL-300G models compatible with the SEL-2600 Series RTD Module (refer to Table 1.2 for model number detail) provide Thermal Protection for the Generator and Prime Mover. The RTD types and locations are individually configurable. Either ambient temperature or generator load current can be configured to bias the winding RTD trip temperature thresholds.

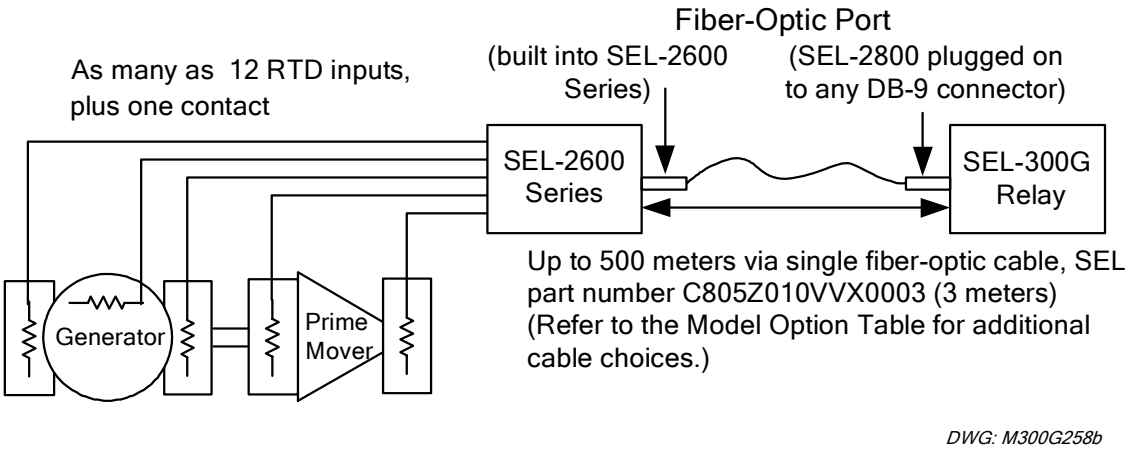

Figure 1.4: Generator Thermal Protection With SEL-2600 Series RTD Module and SEL-300G

Field Ground Protection of Generator

The SEL-300G works with the SEL-2664 Field Ground Module to provide field ground protection for the generator field winding. Two different pickup levels of the insulation resistance are available for configuration. The Field Ground Protection elements (64F) Relay Word bits can be programmed into an output contact for alarm or into the Trip equation for tripping. The protection covers a range of high-resistance as well as low-resistance ground faults (from 0.5 to 200 kilohms).

SEL-300G Requirements for SEL-2664 Application

If the Field Ground Protection functionality is to be added to an existing SEL-300G installation, use Table 1.4 to determine the requirements:

Table 1.4: SEL-300G Requirements for Field Ground Protection Functionality

Existing SEL-300G	Recommended Actions for SEL-2664 Application
Firmware version R1xx	Consult factory for a new replacement SEL-300G
Firmware version R2xx	Consult factory for hardware upgrade or new replacement SEL-300G
Firmware version R3xx	Order Firmware Conversion kit from factory to field upgrade firmware to R323 or later
EIA-232 Serial Port 2 or Port 3 availability	EIA-232 Port 2 or Port 3 availability is required to connect the SEL-2664 to the SEL-300G, using a fiber-optic cable and SEL-2812MR Transceiver

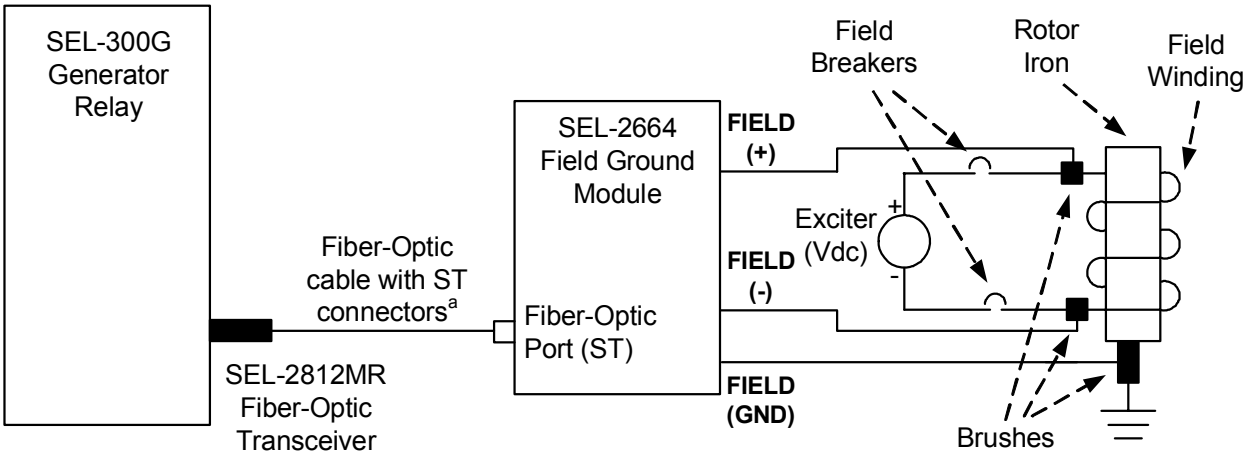

[a] Refer to the Model Option Table for cable choices.

Figure 1.5: Field Ground Protection With the SEL-300G Relay

SEL-300G Relay Generator Protection Features

The SEL-300G offers a full range of elements for generator protection, such as:

- Optional Percentage Restrained Differential Protection (included in SEL-0300G1 and SEL-0300G3 models)
- Optional 87N Ground Differential Protection (included in SEL-0300G0 and SEL-0300G2 models)
- 100 Percent Stator Ground Detection (for high-impedance and resistance grounded generators)
- Reverse/Low-Forward Power Elements
- Volts/Hertz Elements for Overexcitation Protection
- Loss-of-Field Protection
- Negative-Sequence Overcurrent Protection
- Voltage-Restrained Phase Time-Overcurrent Elements
- Voltage-Controlled Phase Time-Overcurrent Elements
- Backup Phase or Compensator Distance Elements

- Neutral Overcurrent Elements
- Under- and Overvoltage Elements for Protection and Control
- Loss-of-Potential Logic
- Optional Synchronism Checking (included in SEL-0300G2 and SEL-0300G3 models)
- Flexible Inadvertent Energization Detection
- Secure Under- and Overfrequency Protection, Plus Off-Fundamental Time Accumulators per *IEEE C37.106-1987*
- Breaker Failure Protection
- Out-of-Step Protection (single and double blinder schemes)
- Thermal Protection (included in models compatible with SEL-2600 Series RTD Module).
- Field Ground Protection (optional when an SEL-300G Relay is used in combination with an SEL-2664 Field Ground Module).

SEL-300G Relay Additional Features

In addition to the protection functions outlined above, the SEL-300G offers advanced measuring and monitoring capabilities not found on other generator relays.

- Extensive High-Accuracy Metering Capabilities
- Configurable Front-Panel Display Replaces Separate Panel Meters
- Event Report and SER Reporting
- Advanced SELOGIC Control Equations
- Contact Inputs and Outputs
- Breaker Monitor
- Station Battery Monitor
- Two Independent Setting Groups

Contact I/O Application

Available Contact Input/Output Options

The SEL-300G is available in several hardware configurations. These configurations are differentiated by the following:

- Chassis size (2U or 3U)
- Mounting type (panel or rack)
- Type of connections at the rear (Screw-Terminal Block or Connectorized)
- Number of optoisolated inputs
- Number of contact outputs

Relay Models SEL-0300G_0H, SEL-0300G_03, SEL-0300G_WH, and SEL-0300G_W3

The relays listed above provide seven programmable output contacts, plus a self-test ALARM contact and six optoisolated inputs in a two-rack unit package. All output contacts are rated to make and carry trip coil current per the requirements of *IEEE C37.90-1989*. These contacts are not rated to interrupt trip coil current.

Relay Models SEL-0300G_1H, SEL-0300G_13, SEL-0300G_YH, and SEL-0300G_Y3

The relays listed above provide 19 programmable output contacts, plus a self-test ALARM contact and 14 optoisolated inputs in a three-rack unit package. All output contacts are rated to make and carry trip coil current per the requirements of *IEEE C37.90-1989*. Seven of the output contacts are not rated to interrupt trip coil current. Twelve of the output contacts may be purchased with high current interruption output contacts for applications requiring up to 10 A inductive interrupt capability.

Note: High current interrupting output contacts are polarity sensitive. Observe polarity markings by connecting even-number screw terminals to the higher voltage potential in the circuit. Do not use high current interrupting output contacts to switch ac control signals.

High Current Interrupting Output Contacts

SEL-300G purchased with the additional I/O board may be further specified to include high current interrupting output contacts. These contacts use an integrated-gate bipolar junction transistor to interrupt contact current in a controlled manner. This increases the contact interrupt rating, prevents contact arcing, and prevents the inductive voltage spike which occurs when an inductive current is interrupted by a standard contact.

Refer to the ***High current interruption option*** on page 1-14 for detailed specifications of the high current interrupting output contacts.

Note: High current interrupting output contacts are polarity sensitive. Observe polarity markings by connecting even-number screw terminals to the higher voltage potential in the circuit. Do not use high current interrupting output contacts to switch ac control signals.

Power Supply and Optoisolated Input DC Voltages

The SEL-300G is available in power supply configurations 125/250 V, 48/125 V, or 24/48 V.

Optoisolated inputs are available with the voltage ratings of 250, 220, 125, 110, 48, or 24 Vdc.

Both the power supply and the optoisolated input voltage ratings are selected when the relay is ordered. Refer to the ***Optoisolated Inputs*** on page 1-14 for detailed specifications.

SERIAL COMMUNICATION CONNECTIONS (TYPICAL)

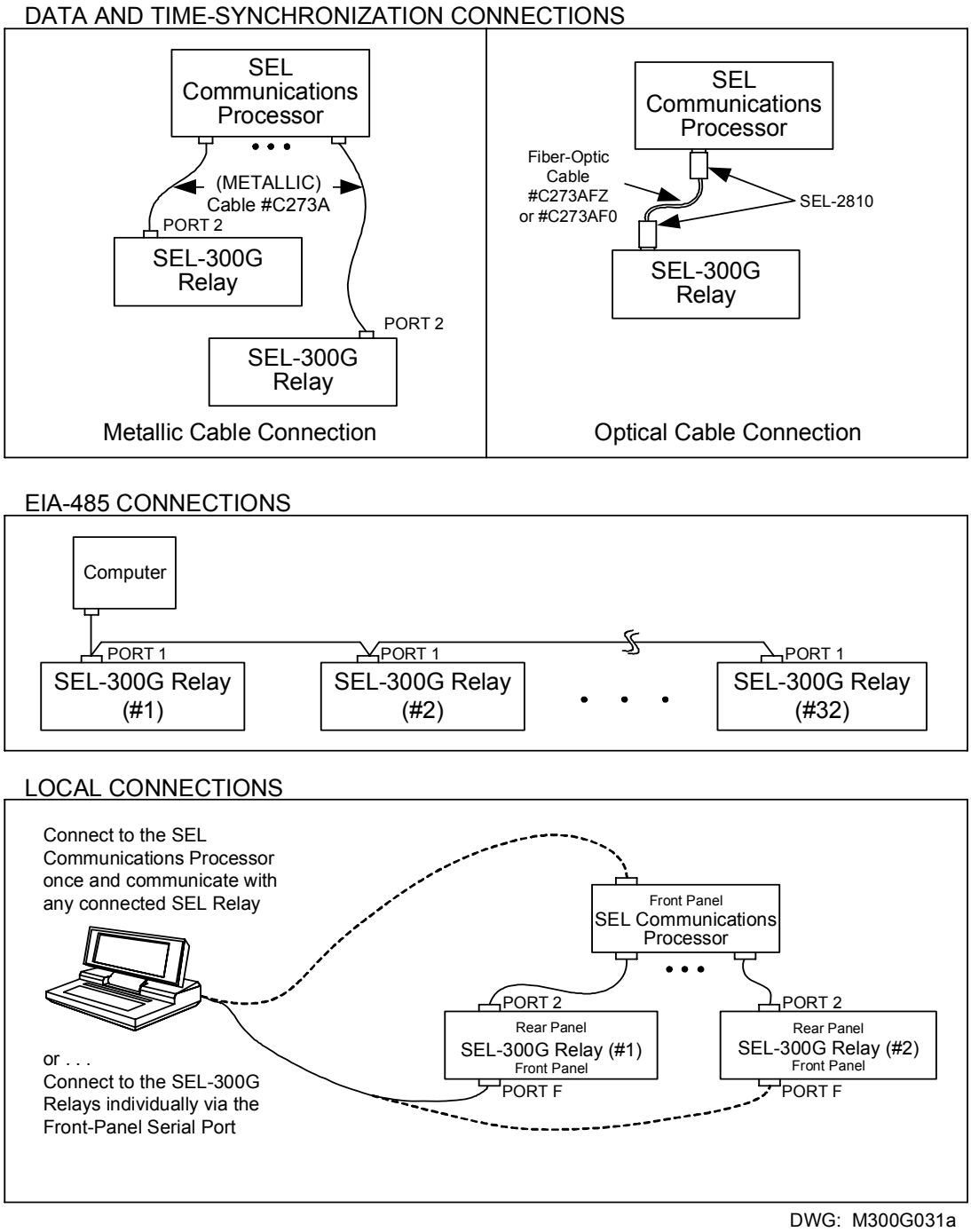

Figure 1.6: SEL-300G Relay Communication Connection Examples

SEL-5801 Cable Selector Software

While you can view or modify many relay settings using the front-panel LCD interface, SELOGIC control equations to control relay contact outputs must be entered via a relay serial port using a PC, terminal emulation software, and appropriate communication cable. The relay also supports communication with other local devices such as modems, port switches, and the SEL-2032/SEL-2030/ SEL-2020 Communications Processors.

Communication with these external devices requires appropriate cable. Some of the most common cables are called out in Figure 1.6. Use the SEL-5801 Cable Selector Software, available free of charge from SEL, to determine the SEL cable part number to connect with other specific devices. You can purchase cables from SEL or refer to the cable pinout provided by the software and build your own.

To obtain your copy of SEL-5801 Cable Selector Software, contact your SEL Representative, or download it directly from our website at http://www.selinc.com.

RELAY SPECIFICATIONS AND OPTIONS

General

Terminal Connections:

Tightening Torque

Terminal Block:	Minimum: 8 in-lb (0.9 Nm)
	Maximum: 12 in-lb (1.4 Nm)
Connectorized:	Minimum: 4.4 in-lb (0.5 Nm)
	Maximum: 8.8 in-lb (1.0 Nm)

Terminals or stranded copper wire. Ring terminals are recommended. Minimum temperature rating of 105°C.

AC Current Inputs:

5 A Nominal

15 A continuous, linear to 100 A symmetrical.
500 A for 1 second.
1250 A for 1 cycle.

Burden:	0.27 VA @ 5 A
	2.51 VA @ 15 A

1 A Nominal

3 A continuous, linear to 20 A symmetrical
100 A for 1 second.
250 A for 1 cycle.

Burden:	0.13 VA @ 1 A
	1.31 VA @ 3 A

AC Voltage Inputs:

80–208 V_{L-L} Nominal, for 4-wire wye voltage input.
80–140 V_{L-L} Nominal, for 3-wire delta voltage input.
300 V_{L-N} continuous limit for 3-phase, 4-wire wye-connection.
300 V_{L-L} continuous limit for 3-phase, 3-wire delta-connection.
300 V continuous, V_{N-NN} neutral voltage input.
300 V continuous, V_{S-NS} synch voltage input.
365 Vac for 10 seconds.

Burden:	0.13 VA @ 67 V
	0.45 VA @ 120 V
	0.80 VA @ 300 V

Power Supply:

125/250 Vdc or Vac

Range:	85–350 Vdc or 85–264 Vac
Burden:	< 25 W

48/125 Vdc or 125 Vac

Range:	38–200 Vdc or 85–140 Vac
Burden:	< 25 W

24/48 Vdc

Range:	18–60 Vdc polarity dependent
Burden:	< 25 W

Output Contacts:

Standard

Make:	30 A		
Carry:	6 A @ 70°C 4 A @ 85°C		
1 s Rating:	50 A		
MOV:	270 Vac, 360 Vdc, 40 J		
Pickup Time:	< 5 ms		
Dropout Time:	< 8 ms, typical		
Breaking Capacity (10,000 operations):	24 V	0.75 A	L/R = 40 ms
	48 V	0.50 A	L/R = 40 ms
	125 V	0.30 A	L/R = 40 ms
	250 V	0.20 A	L/R = 40 ms
Cyclic Capacity (2.5 cycles/second):	24 V	0.75 A	L/R = 40 ms
	48 V	0.50 A	L/R = 40 ms
	125 V	0.30 A	L/R = 40 ms
	250 V	0.20 A	L/R = 40 ms

High Current Interruption Option:

Make:	30 A		
Carry:	6 A @ 70°C 4 A @ 85°C		
MOV:	330 Vdc, 130 J		
Pickup time:	< 5 ms		
Dropout time:	< 8 ms, typical		
Breaking Capacity (10,000 operations):	24 V	10 A	L/R = 40 ms
	48 V	10 A	L/R = 40 ms
	125 V	10 A	L/R = 40 ms
	250 V	10 A	L/R = 20 ms
Cyclic Capacity (4 cycles in 1 second, followed by 2 minutes idle for thermal dissipation):	24 V	10 A	L/R = 40 ms
	48 V	10 A	L/R = 40 ms
	125 V	10 A	L/R = 40 ms
	250 V	10 A	L/R = 20 ms

Note: Do not use high current interrupting output contacts to switch ac control signals. These outputs are polarity dependent.

Note: Make per IEEE C37.90-1989; Breaking and Cyclic Capacity per IEC 60255-23:1994.

Optoisolated Inputs:

250 Vdc:	Pickup	200–300 Vdc
	Dropout	150 Vdc
220 Vdc:	Pickup	176–264 Vdc
	Dropout	132 Vdc
125 Vdc:	Pickup	105–150 Vdc
	Dropout	75 Vdc
110 Vdc:	Pickup	88–132 Vdc
	Dropout	66 Vdc
48 Vdc:	Pickup	38.4–60 Vdc
	Dropout	28.8 Vdc
24 Vdc:	Pickup	15.0–30 Vdc

Note: 24, 48, 125, 220, and 250 Vdc optoisolated inputs draw approximately 5 mA of current and 110 Vdc inputs draw approximately 8 mA of current. All current ratings are at nominal input voltages.

Frequency and Rotation:

System Frequency:	60 or 50 Hz
Phase Rotation:	ABC or ACB
Frequency Tracking Range:	20–70 Hz

Note: V_A required for frequency tracking.

Communications Ports:

EIA-232:	1 front and 2 rear
EIA-485:	1 rear
Baud rate:	300–38400

Time-Code Input:

Relay accepts demodulated IRIG-B time-code input at Port 2.

Relay time is synchronized to within ±5 ms of time-source input.

Dimensions:

See Figure 5.1 for exact relay dimensions.

Operating Temperature:

–40° to +85°C (–40° to +185°F)

Note: LCD contrast impaired for temperatures below –20°C.

Weight:

2U Rack Unit:	Minimum: 13.5 lbs (6.2 kg) Maximum: 15 lbs (6.8 kg)
3U Rack Unit:	Minimum: 16.5 lbs (7.5 kg) Maximum: 18.5 lbs (8.4 kg)

Certifications:

ISO: Relay is designed and manufactured using ISO-9001 certified quality program.

UL/CSA: UL listed to UL-508 and CSA certified to C22.2 No.14-95.

CE: Mark (available only in screw-terminal block version).

Type Tests:

Cold:	IEC 60068-2-1:1990 [EN 60068-2-1:1993], Test Ad; 16 hr @ –40°C
Dry Heat:	IEC 60068-2-2:1974 [EN 60068-2-2:1993], Test Bd; 16 hr @ +85°C
Damp Heat, Cyclic:	IEC 60068-2-30:1980, Test Db; 25° to 55°C, 6 cycles, 95% humidity
Dielectric Strength:	IEC 60255-5:2000, IEEE C37.90-1989, 2500 Vac on analogs, contact inputs, and contact outputs; 3100 Vdc on power supply; 2200 Vdc on EIA-485 communications port. Type tested for 1 minute.
Impulse:	IEC 60255-5:2000, 0.5 J, 5000 V
Vibration:	IEC 60255-21-1:1988 [EN 60255-21-1:1995], Class 1 Endurance, Class 2 Response
Shock and Bump:	IEC 60255-21-2:1988 [EN 60255-21-2:1995], Class 1 Shock Withstand, Class 2 Shock Response
Seismic:	IEC 60255-21-3:1993 [EN 60255-21-3:1995], Class 2
1 MHz Burst Disturbance:	IEC 60255-22-1:1988, Class 3 (2500 V common and differential mode)
Emissions:	IEC 60255-25:2000
Conducted Radio Frequency:	ENV 50141:1993 10 V/m, IEC 61000-4-6:1996 [EN 61000-4-6:1996] 10 V/m, IEC 60255-22-6:2001 10 V/m
Digital Radio Telephone RF:	ENV 50204:1995 10 V/m at 900 MHz and 1.89 GHz
Electrostatic Discharge:	IEC 60255-22-2:1996 [EN 60255-22-2:1996], IEC 61000-4-2:1995 [EN 61000-4-2:1995], Level 1,2,3,4 IEEE C37.90.3-2001 Severity: 2, 4, 8 kV Contact: 4, 8, 15 kV air

Radiated Radio Frequency: ENV 50140:1993 10 V/m, IEC 60255-22-3:2000 10 V/m, IEC 61000-4-3:1998 10 V/m, IEEE C37.90.2-1995 35 V/m, no keying test, frequency elements accurate to 0.1 Hz

Fast Transient Disturbance: IEC 60255-22-4:1992 [EN 60255-22-4:1992] 4 kV at 2.5 kHz and 5 kHz, EN 61000-4-4:1995 [EN 61000-4-4:1995], 4 kV at 2.5 kHZ and 5 kHz

Object Penetration and Dust Ingress: IEC 60529:1989 [EN 60529:1992] IP30

Protection Against Splashing Water: IEC 60529:1989 [EN 60529:1992] IP54 from the front panel using the SEL-9103

Surge Withstand: IEC 60255-22-1:1998, 2.5 kV peak common mode, 2.5 kV peak differential mode, IEEE C37.90.1-1989 3.0 kV oscillatory, 5.0 kV fast transient, IEEE C37.90.1/D6, 2.5 kV peak common mode, 2.5 kV differential mode oscillatory, 4 kV at 2.5 kV and 5 kHz fast transient

Generic Standard: EN 50082-2:1995

Processing Specifications

AC Voltage and Current Inputs:

16 samples per power system cycle, 3 dB low-pass filter cut-off frequency of 560 Hz.

Digital Filtering:

- One cycle cosine after low-pass analog filtering.
- Net filtering (analog plus digital) rejects dc and all harmonics greater than the fundamental.
- Second-harmonic current and third-harmonic voltage filters are also included for specific protection functions.

Protection and Control Processing:

Four times per power system cycle for all elements except out-of-step, loss-of-field, and RTD elements. Loss-of-field and out-of-step elements are processed two times per power system cycle and the RTD elements once in two seconds.

Relay Element Setting Ranges and Accuracies

Phase Distance Element (21):

5 A Model

Reach:	0.1–100.0 ohms
Offset:	0.0–10.0 ohms
Steady-State Impedance Accuracy:	± 5%, ± 0.1 ohm
Minimum Phase Current:	0.5 A

1 A Model

Reach:	0.5–500.0 ohms
Offset:	0.0–50.0 ohms
Steady-State Impedance Accuracy:	± 5%, ± 0.5 ohm
Minimum Phase Current:	0.1 A
Maximum Torque Angle Range:	90–45°, 1° step
Pickup Time:	33 ms at 60 Hz (Max)
Zone 1 and Zone 2 Definite-Time Delays:	0.00–400.00 s
Maximum Time-Delay Accuracy:	± 0.1%, ± 4.2 ms at 60 Hz

Volts/Hertz Over-Excitation Element (24):

Definite-Time Element

Pickup Range:	100–200%
Steady-State Pickup Accuracy:	± 1%
Pickup Time:	25 ms at 60 Hz (Max)
Definite-Time Pickup Range:	0.00–400.00 s
Time-Delay Accuracy:	± 0.1%, ± 4.2 ms at 60 Hz (Max)

Composite-Time Element

Inverse-Time Pickup Range:	100–200%
Inverse-Time Curve:	0.5, 1.0, or 2.0
Inverse-Time Dial:	0.1–10.0 s
Inverse-Time Steady-State Pickup Accuracy:	± 1%
Inverse-Time Timing Accuracy:	± 4% ± 25 ms at 60 Hz, for V/Hz above 1.2 multiples of pickup setting, and for operating times greater than 4 s.
Definite-Time Pickup Range:	100–200%
Definite-Time Setting Range:	0.00–400.00 s
Pickup Time:	25 ms at 60 Hz (Max)
Definite-Time Delay Accuracy:	± 0.1%, ± 4.2 ms at 60 Hz
Linear Reset Time:	0.00–400.00 s

Optional Synchronism Checking Function (25) (Model 0300G2 and Model 0300G3):

Synch-Check Voltage Source:	VA, VB, VC, VAB, or VBC
Supervisory Voltage Setting Range:	20.0–200.0 V
Steady-State Voltage Accuracy:	± 5%, ± 0.1 V
Maximum Percentage Voltage Difference:	1.0–15.0%

Supervisory Slip Frequency Window Element:	–1.00 Hz–1.00 Hz
Steady-State Slip Accuracy:	± 0.02 Hz
Close Acceptance Angle 1, 2:	0–80°
Target Close Angle:	–15–15°
Breaker Close Delay:	0.000–1.000 s
Close Failure Angle:	3–120°
Steady-State Angle Accuracy:	± 0.5°
Maximum Transient Angle Accuracy:	± 1.8 • slip ± 0.5°

Directional Power Element (32):

Two Definite-Time Elements

Setting Range:	± 0.0015 to ± 3.000 pu
Steady-State Pickup Accuracy:	± 0.0015 pu ± 2% of setting, INOM = 5 A, VNOM = 120 V, PF ≥ 0.2
Pickup Time:	25 ms at 60 Hz (Max)
Definite-Time Setting Range:	0.01–400.00 s
Maximum Definite-Time Delay Accuracy:	± 0.1%, ± 4.2 ms at 60 Hz

Loss-of-Field Element (40):

Two Mho Zones

5 A Model

Zone 1 Offset:	–50.0–0.0 ohms
Zone 2 Offset:	–50.0–50.0 ohms
Zone 1 and Zone 2 Diameter:	0.1–100.0 ohms
Steady-State Impedance Accuracy:	± 0.1 ohm, ± 5% of offset + diameter
Minimum Pos.-Seq. Signals:	0.25 V V1, 0.25 A I1

1 A Model

Zone 1 Offset:	–250.0–0.0 ohms
Zone 2 Offset:	–250.0–250.0 ohms
Zone 1 and Zone 2 Diameter:	0.5–500.0 ohms
Steady-State Impedance Accuracy:	± 0.5 ohm, ± 5% of offset + diameter
Minimum Pos.-Seq. Signals:	0.25 V V1, 0.05 A I1
Directional Element Angle:	–20.0°–0.0°
Pickup Time:	50 ms at 60 Hz (Max)
Zone 1 and Zone 2 Definite-Time Delays:	0.00–400.00 s
Maximum Definite-Time Delay Accuracy:	± 0.1%, ± 8.3 ms at 60 Hz

Negative-Sequence Overcurrent Elements (46):

Definite-Time and Inverse-Time Neg.-Seq. I_2 Pickup:	2%–100% of generator rated secondary current
Generator Rated Secondary Current:	5 A Model: 2.5–10.0 A secondary 1 A Model: 0.5–2.0 A secondary
Steady-State Pickup Accuracy:	5 A Model: ± 0.025 A, ± 3% 1 A Model: ± 0.005 A, ± 3%
Pickup Time:	50 ms at 60 Hz (Max)
Definite-Time Delay Setting Range:	0.02–999.90 s
Maximum Definite-Time Delay Accuracy:	± 0.1%, ± 4.2 ms at 60 Hz
Inverse-Time Element Time Dial:	K = 1 to 100 s
Linear Reset Time:	240 s fixed
Inverse-Time Timing Accuracy:	± 4%, ± 50 ms at 60 Hz for $\|I_2\|$ above 1.05 multiples of pickup

Instantaneous/Definite-Time Overcurrent Elements (50):

Phase, Residual Ground, Neutral Protection

Current Pickup (A secondary):	5 A Model: 0.25–100.00 1 A Model: 0.05–20.00
Steady-State Pickup Accuracy:	5 A Model: ± 0.05 A, ± 3% 1 A Model: ± 0.01 A, ± 3%
Transient Overreach:	± 5% of pickup
Pickup Time:	25 ms at 60 Hz (Max) **Note:** 50 ms for 50Q element.
Time Delay:	0.00–400.00 s
Timer Accuracy:	± 0.1%, ± 4.2 ms at 60 Hz

Inverse Time-Overcurrent Elements (51):

Residual Ground and Neutral Protection

Current Pickup (A secondary):	5 A Model: 0.5–16.0 1 A Model: 0.1–3.2 A
Steady-State Pickup Accuracy:	5 A Model: ± 0.05 A, ± 3% 1 A Model: ± 0.01 A, ± 3%
Time Dials:	US: 0.5–15.0, 0.01 steps IEC: 0.05–1.00, 0.01 steps
Timing:	± 4%, ± 25 ms at 60 Hz for |I| between 2 and 20 multiples of pickup

Voltage Restrained Phase Time-Overcurrent Element (51V):

Phase Pickup (A secondary):	5 A Model: 2.0–16.0 1 A Model: 0.4–3.2
Steady-State Pickup Accuracy:	5 A Model: ± 0.05 A, ± 3% 1 A Model: ± 0.01 A, ± 3%
Time Dials:	US: 0.5–15.0, 0.01 steps IEC: 0.05–1.00, 0.01 steps
Timing:	± 4%, ± 25 ms at 60 Hz for |I| between 2 and 20 multiples of pickup
Voltage Restraint Type:	Linear restraint

Voltage Controlled Phase Time-Overcurrent Element (51C):

Phase Pickup (A secondary):	5 A Model: 0.5–16.0 1 A Model: 0.1–3.2
Steady State Pickup Accuracy:	5 A Model: ± 0.05 A, ± 3% 1 A Model: ± 0.01 A, ± 3%
Time Dials:	US: 0.5–15.0, 0.01 steps IEC: 0.05–1.00, 0.01 steps
Timing:	± 4%, ± 25 ms for |I| between 2 and 20 multiples of pickup

Instantaneous / Definite-Time Under- (27) / Overvoltage (59) Elements:

Phase and Residual 27/59:	0.0–200.0 V
Phase-to-Phase 27:	0.0–200.0 V
Phase-to-Phase 59:	0.0–300 V (for 4-wire wye voltage input)
Phase-to-Phase 59:	0.0–200 V (for 3-wire delta voltage input)
Pos.-, Neg.-, and Zero-Sequence 59:	0.0–200.0 V
Steady-State Pickup Accuracy:	± 5%, ± 0.1 V
SELOGIC Control Equation Time-Delay Setting Range:	0.00–3000.00 s

Desired time delay may be added using SELOGIC Control Equation Timers.

100 Percent Stator Ground Protection (64G):

Neutral Fundamental Overvoltage 64G1:	0.0–150.0 V
Steady-State Pickup Accuracy:	± 5%, ± 0.1 V
Pickup Time:	25 ms at 60 Hz (Max)
Definite-Time Delay:	0.00–400.00 s
Maximum Definite-Time Delay Accuracy:	± 0.1%, ± 4.2 ms at 60 Hz
Third-Harmonic Voltage Differential or Third-Harmonic Neutral Undervoltage Pickup 64G2:	0.1–20.0 V
Steady-State Pickup Accuracy:	± 5%, ± 0.1 V
Third-Harmonic Voltage Differential Ratio Setting Range:	0.0 to 5.0
Pickup Time:	50 ms at 60 Hz (Max)
Definite-Time Delay:	0.00–400.00 s
Maximum Definite-Time Delay Accuracy:	± 0.1%, ± 4.2 ms at 60 Hz

Field Ground Protection (64F) (optional—requires SEL-2664 Field Ground Module):

Field Ground Protection Element:	0.5–200.0 kilohms
Pickup Accuracy:	± 5% ± 500 Ω for 48 ≤ VF ≤ 825 Vdc (VF is the generator field winding excitation dc voltage) ± 5% ± 20 kΩ for 825 < VF ≤ 1500 Vdc (VF is the generator field winding excitation dc voltage)
Pickup Time:	≤ 2 s if the injection frequency in the SEL-2664 is selected at 1 Hz ≤ 8 s if the injection frequency in the SEL-2664 is selected at 0.25 Hz
Definite-Time Delay:	0.0–99.0 s
Maximum Definite-Time Delay Accuracy:	± 0.5% ± 5 ms

Out-of-Step Element (78):

5 A Model

Forward Reach:	0.1–100.0 ohms
Reverse Reach:	0.1–100.0 ohms
Single Blinder	
Right Blinder:	0.1–50.0 ohms
Left Blinder:	0.1–50.0 ohms
Double Blinder:	
Outer Resistance Blinder:	0.2–100.0 ohms
Inner Resistance Blinder:	0.1–50.0 ohms
Steady-State Impedance Accuracy:	± 0.1 ohm, ± 5% of diameter
Pos.-Seq. Current Supervision:	0.25–30.00 A

1 A Model

Forward Reach:	0.5–500.0 ohms
Reverse Reach:	0.5–500.0 ohms
Single Blinder:	
Right Blinder:	0.5–250.0 ohms
Left Blinder	0.5–250.0 ohms
Double Blinder:	
Outer Resistance Blinder:	1.0–500.0 ohms
Inner Resistance Blinder:	0.5–250.0 ohms
Steady-State Impedance Accuracy:	± 0.5 ohm, ± 5% of diameter
Pos.-Seq. Current Supervision:	0.05–6.00 A
Pickup Time:	50 ms at 60 Hz (Max)
Definite-Time Timers:	± 0.1%, ± 8.3 ms at 60 Hz

Definite-Time Under/Overfrequency Elements (81):

Frequency:	20–70 Hz, 0.01 Hz steps
Pickup Time:	60 ms at 60 Hz (Max)
Time Delays:	0.03–400.00 s
Maximum Definite-Time Delay Accuracy:	±0.1%, ±4.2 ms at 60 Hz
Supervisory 27:	20–150 V, ± 5%, ± 0.1 V

Steady-State plus Transient Overshoot:
$(\pm 0.01 + \Delta f_{sys})$ Hz

Frequency Compensation Over Temperature:
$\Delta f_{sys} = f_{sys} \cdot (0.04 \cdot 10^{-6}) (T–25°C)^2$
where T = Temperature of relay via **STATUS** command

Optional Differential Elements (87) (Model 0300G1 and Model 0300G3):

Restrained Element Pickup:	0.04–1.0 • TAP
Steady-State Pickup Accuracy:	5 A Model: ± 0.1 A, ± 5% 1 A Model: ± 0.02 A, ± 5%
Slope 1 Range:	5–100%
Slope 2 Range:	OFF, 50–200%
Slope 1 Limit:	1–16 • TAP
2nd-Harmonic Blocking Percentage:	OFF, 5–100%
Unrestrained Element Pickup:	1.0–20.0 • TAP
Steady-State Pickup Accuracy:	5 A Model: ± 0.1 A, ± 5% 1 A Model: ± 0.02 A, ± 5%
TAP Range:	$TAP_{MAX}/TAP_{MIN} \leq 7.5$
5 A Model:	0.5–160.0 A secondary
1 A Model:	0.1–32.0 A secondary

Restrained Element Pickup Time:	24/28/38 ms (Min/Typ/Max)
Unrestrained Element Pickup Time:	13/20/32 ms (Min/Typ/Max)

Note: Pickup time accuracies listed at 60 Hz

Optional Ground Differential Elements (87N) (Model 0300G0 and Model 0300G2):

Ground Differential Pickup:	5 A Model: 0.10–15.00 A 1 A Model: 0.02–3.00 A
Ratio CTR/CTRN:	1.0–40.0
Steady-State Pickup Accuracy:	5 A Model: ± 0.05, ± 3% 1 A Model: ± 0.01, ± 3%
Pickup Time:	25 ms at 60 Hz (Max)
Time Delays:	0.00–400.00 s
Maximum Definite-Time Delay Accuracy:	± 0.1%, ± 4.2 ms at 60Hz

Optional RTD Elements (Models Compatible with SEL-2600 Series RTD Module):

12 RTD Inputs via SEL-2600 Series RTD Module and SEL-2800 Fiber-Optic Transceiver
Monitor Winding, Bearing, Ambient, or Other Temperatures
PT 100, NI 100, NI 120, and CU 10 RTD-Types Supported, Field Selectable
Trip, Alarm, and Ambient/Load-Current Bias Settings
Up to 500 m fiber-optic cable to SEL-2600 Series RTD Module

Measuring Range:	–50° to 250°C
Accuracy:	± 2°C

Demand Ammeter Elements:

Demand Ammeter Time Constants:	5, 10, 15, 30, or 60 min
Demand Ammeter Threshold Range:	5 A Model: 0.5–16.0 A 1 A Model: 0.1–3.2 A
Steady-State Pickup Accuracy:	5 A Model: ± 0.05 A, ± 3% 1 A Model: ± 0.01 A, ± 3%

Inadvertent Energization Logic:

Time-Delay Pickup and Dropout Timers:	0.00–400.00 s
Maximum Definite-Time Delay Accuracy:	± 0.1%, ± 4.2 ms at 60 Hz

Breaker Failure Protection:

Implement using nondedicated overcurrent element and SELOGIC Control Equation Variable Timer.

Phase Overcurrent Pickup (A secondary):	5 A Model: 0.25–100.00 A 1 A Model: 0.05–20.00 A
Steady-State Pickup Accuracy:	5 A Model: ± 0.05 A, ± 3% 1 A Model: ± 0.01 A, ± 3%
Time-Delay Pickup and Dropout Timers:	0.00–3000.00 s
Maximum Definite-Time Delay Accuracy:	± 0.1%, ± 4.2 ms

SELOGIC Control Equation Variable Timers:

16 Time-Delay Pickup and Dropout Timers:	0.00–3000.00 s
Maximum Definite-Time Delay Accuracy:	± 0.1%, ± 4.2 ms at 60 Hz

Substation Battery Voltage Monitor:

Station Battery Voltage Monitor Pickup Ranges:	20–300 Vdc
Measuring Accuracy:	± 2 V, ± 2%

Metering Accuracy:

Accuracies are specified at 20°C and at nominal system frequency unless noted otherwise.

Voltages V_A, V_B, V_C, V_N, V_S, $3V_0$, V_1, V_2, V_{AB}, V_{BC}, V_{CA}:	± 0.1% (33.5–218.0 V)
Currents I_A, I_B, I_C:	5 A Nominal: ± 1 mA or ± 0.1% (0.5–10.0 A) 1 A Nominal: ± 0.2 mA or ± 0.1% (0.1–2.0 A)
Temperature coefficient:	$[(0.0002\%)/(°C)^2] \cdot (__°C–20°C)^2$ (see example below)
Phase Angle Accuracy:	± 0.5°
Currents I_N, I_{A87}, I_{B87}, I_{C87}, I_1, $3I_0$, $3I_2$:	5 A Nominal: ± 0.05 A or ± 3% (0.5–100.0 A) 1 A Nominal: ± 0.01 A or ± 3% (0.1–20.0 A)

MW / MVAR (A, B, C, and 3-phase; 5 A nominal; wye-connected voltages):

Accuracy (MW / MVAR)	**at load angle**
for 0.5 A ≤ phase current < 1.0 A:	
0.70% /–	0° or 180° (unity power factor)
0.75% / 6.50%	± 8° or ± 172°
1.00% / 2.00%	± 30° or ± 150°
1.50% / 1.50%	± 45° or ± 135°
2.00% / 1.00%	± 60° or ± 120°
6.50% / 0.75%	± 82° or ± 98°
– / 0.70%	± 90° (power factor = 0)
for phase current ≥ 1.0 A :	
0.35% /–	0° or 180° unity power factor)
0.40% / 6.00%	± 8° or ± 172°
0.75% / 1.50%	± 30° or ± 150°
1.00% / 1.00%	± 45° or ± 135°
1.50% / 0.75%	± 60° or ± 120°
6.00% / 0.40%	± 82° or ± 98°
– / 0.35%	± 90° (power factor = 0)

Metering accuracy calculation example for currents IA, IB, and IC due to preceding stated temperature coefficient:

For temperature of 40°C, the additional error for currents IA, IB, and IC is:

$$[(0.0002\%)/(°C)^2] \cdot (40°C–20°C)^2 = 0.08\%$$

TABLE OF CONTENTS

SECTION 2: RELAY ELEMENT SETTINGS 2-1

Relay Functional Overview 2-1
- Data Acquisition and Filtering 2-1
- Element Processing 2-2
- Relay Word 2-2
- SELOGIC Control Equations 2-2
- Background Tasks 2-2

Relay Settings Overview 2-2
Protection Element Selection Guidelines 2-4
Relay Configuration Settings 2-5
- Group 1, Group 2 Configuration Setting Descriptions 2-5
- Global Configuration Setting Descriptions (SET G) 2-9

Distance Elements 2-10
- Element Description 2-10
- Setting Calculation 2-15
- Element Operating Characteristics 2-17

Volts/Hertz Element 2-20
- Element Description 2-20
- Setting Calculation 2-22
- Element Operating Characteristics 2-23

Reverse/Low-Forward Power Element 2-27
- Element Description 2-27
- Setting Calculation 2-29
- Element Operating Characteristics 2-30

Loss-of-Field Element 2-31
- Element Description 2-31
- Setting Calculation 2-33
- Element Operating Characteristics 2-36

Negative-Sequence Overcurrent Elements 2-37
- Element Description 2-37
- Setting Calculation 2-39
- Element Operating Characteristics 2-40

Overcurrent Elements 2-41
- Element Description 2-41
- Neutral Overcurrent Setting Calculation 2-46
- Element Operating Characteristics 2-47
- Time-Overcurrent Curves 2-52

Voltage-Controlled/Restrained Time-Overcurrent Elements 2-55
- Element Description 2-55
- Voltage-Controlled and Voltage-Restrained Time-Overcurrent Setting Calculation 2-57
- Element Operating Characteristics 2-59

Over/Under Voltage Elements 2-61
- Element Description 2-61
- Voltage Element Setting Calculation 2-63

Loss-of-Potential (60LOP) Protection 2-65

Element Description 2-65
100% Stator Ground Protection Elements 2-65
Element Description 2-65
100% Stator Ground Protection Setting Calculation 2-68
Element Operating Characteristics 2-73
Field Ground Protection 2-74
Element Description 2-74
Relay Word Bits 2-76
Out-of-Step Element–Single Blinder Scheme 2-77
Element Description 2-77
Settings Calculation 2-81
Out-of-Step Element–Double Blinder Scheme 2-83
Element Description 2-83
Settings Calculation 2-87
Frequency Protection 2-90
Element Description 2-90
Frequency Element Setting Calculation 2-91
Element Operating Characteristics 2-92
Off-Frequency Accumulators 2-94
Element Description 2-94
Abnormal Frequency Protection Setting Calculation 2-96
Element Operating Characteristics 2-97
RTD-Based Protection (Models Compatible With SEL-2600 Series RTD Module) 2-99
Element Description 2-99
Pole Open Logic 2-106
Element Description 2-106
Pole Open Logic Setting Calculation 2-106
Inadvertent Energization Protection 2-107
Breaker Failure Protection 2-107
Differential Protection 2-107
Synchronism Checking 2-107

TABLES

Table 2.1: Recommended Protection Elements by Generator Grounding Method 2-4
Table 2.2: SEL-2664 Module Configuration Settings 2-75
Table 2.3: 64F Elements Settings 2-76
Table 2.4: 64 Elements Torque Control Equation 2-76
Table 2.5: RTD Resistance vs. Temperature 2-104

FIGURES

Figure 2.1: Relay Processing Order 2-1
Figure 2.2: SEL-300G Relay Setting Categories 2-3
Figure 2.3: PTRN, CTRN Setting Examples 2-7
Figure 2.4: Phase Rotation Settings 2-8
Figure 2.5 Distance Element Operating Characteristics 2-17
Figure 2.6: Zone 1 Mho Element Logic 2-17
Figure 2.7: Mho Distance Element Logic 2-18
Figure 2.8: Load Encroachment Logic 2-18

Figure 2.9: Zone 1 Compensator Element Logic 2-19
Figure 2.10: Compensator Distance Element Logic 2-19
Figure 2.11: Dual-Level Volts/Hertz Time-Delay Characteristic, 24CCS = DD 2-23
Figure 2.12: Composite Inverse/Definite-Time Overexcitation Characteristic, 24CCS = ID 2-23
Figure 2.13: Volts/Hertz Inverse-Time Characteristic, 24IC = 0.5 2-24
Figure 2.14: Volts/Hertz Inverse-Time Characteristic, 24IC = 1 2-25
Figure 2.15: Volts/Hertz Inverse-Time Characteristics, 24IC = 2 2-26
Figure 2.16: Volts/Hertz Element Logic Diagram 2-27
Figure 2.17: Reverse/Low-Forward Power Element Operating Characteristic 2-30
Figure 2.18: Reverse/Low-Forward Power Element Logic Diagram 2-30
Figure 2.19: Loss-of-Field Logic Diagram 2-31
Figure 2.20: Loss-of-Field Element Operating Characteristic, Negative Zone 2 Offset 2-36
Figure 2.21: Loss-of-Field Element Operating Characteristic, Positive Zone 2 Offset 2-37
Figure 2.22: Negative-Sequence Overcurrent Element Logic Diagram 2-40
Figure 2.23: Negative-Sequence Time-Overcurrent Operating Characteristic 2-41
Figure 2.24: Instantaneous Overcurrent Element Pickup Time Curve 2-48
Figure 2.25: Instantaneous Overcurrent Element Reset Time Curve 2-48
Figure 2.26: Definite-Time Overcurrent Element Logic Diagram 2-49
Figure 2.27: 87-Input Definite-Time Overcurrent Element Logic Diagram 2-50
Figure 2.28: Neutral Ground Time-Overcurrent Element 51NT 2-51
Figure 2.29: Residual Ground Time-Overcurrent Element 51GT 2-51
Figure 2.30: U.S. Moderately Inverse Curve: U1 2-53
Figure 2.31: U.S. Inverse Curve: U2 2-53
Figure 2.32: U.S. Very Inverse Curve: U3 2-53
Figure 2.33: U.S. Extremely Inverse Curve: U4 2-53
Figure 2.34: U.S. Short-Time Inverse Curve: U5 2-54
Figure 2.35: I.E.C. Class A Curve (Standard Inverse): C1 2-54
Figure 2.36: I.E.C. Class B Curve (Very Inverse): C2 2-54
Figure 2.37: I.E.C. Class C Curve (Extremely Inverse): C3 2-54
Figure 2.38: I.E.C. Long-Time Inverse Curve: C4 2-55
Figure 2.39: I.E.C. Short-Time Inverse Curve: C5 2-55
Figure 2.40: Voltage-Controlled Phase Time-Overcurrent Element 51CT 2-59
Figure 2.41: Voltage-Restrained Phase Time-Overcurrent Element 51VT 2-60
Figure 2.42: 51V Element Voltage Restraint Characteristic 2-60
Figure 2.43: Undervoltage Element Logic Diagram 2-63
Figure 2.44: Overvoltage Element Logic Diagram 2-64
Figure 2.45: 64G Element Operating Characteristic 2-66
Figure 2.46: 64G Logic Diagram 2-73
Figure 2.47: Field Ground Protection (64F) Elements Logic 2-75
Figure 2.48: Single Blinder Scheme Operating Characteristics 2-77
Figure 2.49: Single Blinder Scheme Logic Diagram 2-79
Figure 2.50: Single Blinder Typical Settings 2-82
Figure 2.51: Double Blinder Scheme Operating Characteristics 2-83
Figure 2.52: Double Blinder Scheme Logic Diagram 2-85
Figure 2.53: Double Blinder Typical Settings 2-89
Figure 2.54: Frequency Element Voltage Supervision Logic 2-92
Figure 2.55: Frequency Element Logic 2-93

Figure 2.56: Example Turbine Operating Limitations During Abnormal Frequency 2-97
Figure 2.57: Abnormal Frequency Protection Logic Diagram..... 2-98
Figure 2.58: Winding RTD Trip Characteristics with BLMT = 2.00 2-103
Figure 2.59: Pole Open Logic Diagram 2-106

SECTION 2: RELAY ELEMENT SETTINGS

RELAY FUNCTIONAL OVERVIEW

In preparation to calculate settings for the various relay functions and elements, it is helpful to understand what the relay does with those settings once entered. The SEL-300G Relay

- Measures generator voltages and currents
- Acquires optoisolated control input states
- Performs protection element algorithms
- Evaluates built-in and user settable logic conditions
- Controls output contacts

Figure 2.1 illustrates this process.

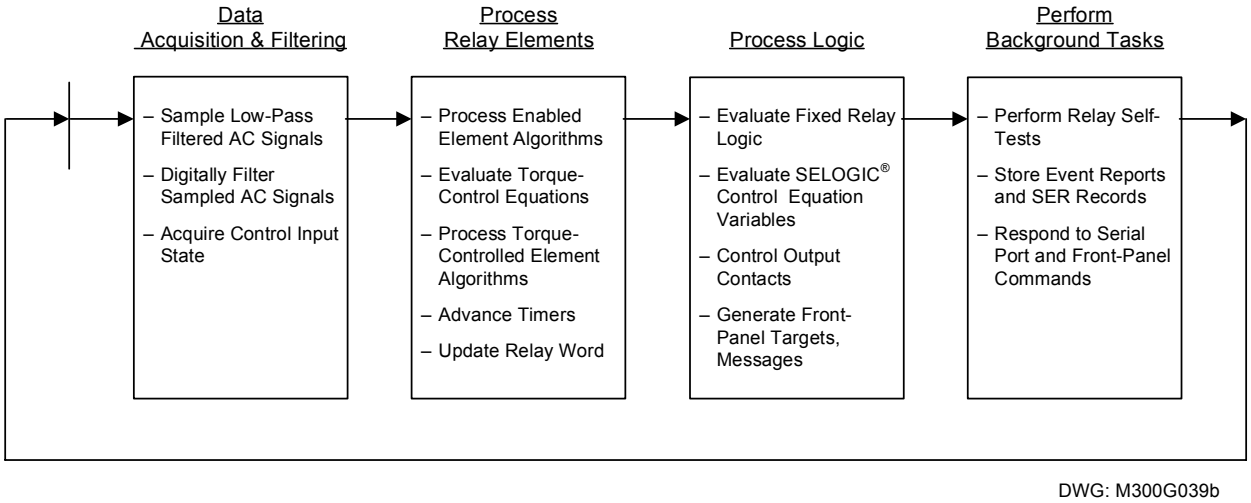

Figure 2.1: Relay Processing Order

Data Acquisition and Filtering

The SEL-300G contains current and voltage transformers that step down the secondary voltage and current signals to levels that are safely handled by the internal electronic components. The low-level ac signals pass through analog low-pass filters and a multiplexer to an analog-to-digital converter. The multiplexer and analog-to-digital converter sample the voltage and current signals and convert them to digital values used by the microprocessor.

The SEL-300G tracks the frequency of the ac voltage. The relay adjusts the sampling rate to the present system frequency (in the range from 20 to 70 Hz) and takes 16 digital samples of the analog signals every cycle. When ac voltage is removed from the relay, the sampling clock automatically adjusts to the user settable nominal frequency, FNOM, either 50 or 60 Hz.

The relay digitally filters the latest current and voltage samples to remove unwanted signal components. There are digital filters to extract the fundamental frequency voltages and currents, third-harmonic voltages, and second-harmonic currents. The majority of protection and metering functions use fundamental frequency voltages and currents. The 100 percent stator ground protection function uses third-harmonic voltages. When differential elements are included, the

second-harmonic blocking function uses the second-harmonic currents. At this time, the relay also checks the optoisolated inputs to determine if any are asserted.

Element Processing

Having acquired and filtered the voltage and current signals, the relay next evaluates the enabled protection elements. Some elements are supervised by a torque-control setting. In this case, the equation result must be a logical 1 for the element to operate. Element timers are advanced at this point.

The out-of-step and loss-of-field elements are processed twice per power system cycle and the RTD elements once in two seconds. Other elements are processed four times per power system cycle.

Relay Word

As the relay processes the protection element algorithms and evaluates the fixed logic, if an element is picked up or a logic condition is true, the relay changes the state of the associated Relay Word bit from a logical 0 to a logical 1. The relay uses these results to evaluate SELOGIC control equations defined in the relay settings.

SELOGIC Control Equations

After evaluating the fixed logic, the relay evaluates the SELOGIC control equations, and then controls the relay output contacts.

Background Tasks

By design, there is always processing time left after the relay controls its output contacts and before it begins digitally filtering acquired signals again. During this free time, the relay performs background tasks such as:

- Self testing
- Event report and SER record storage
- Responding to serial port and front-panel commands

RELAY SETTINGS OVERVIEW

You configure the SEL-300G generator protection and monitoring functions by entering settings in three categories, described by Figure 2.2.

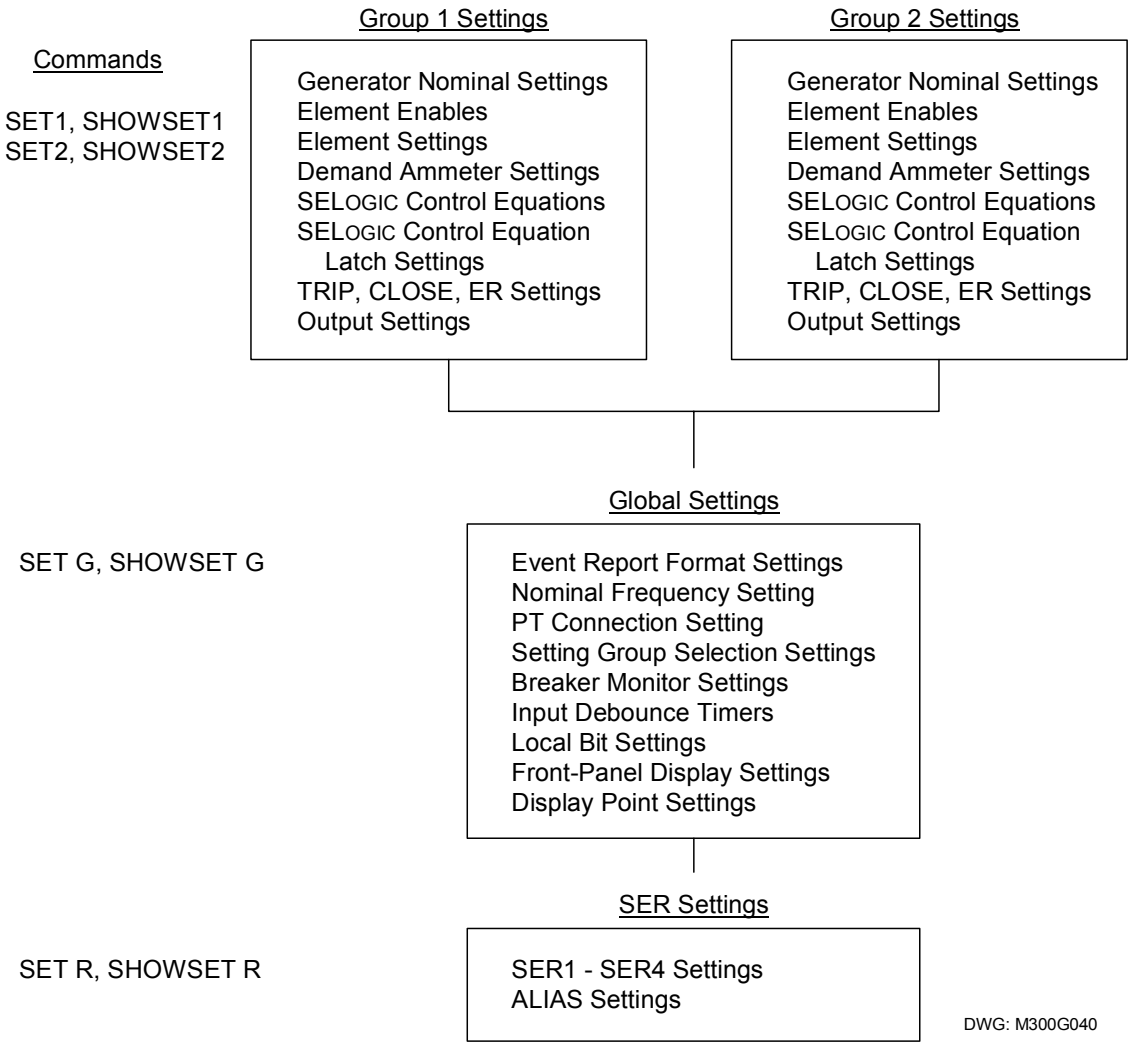

Figure 2.2: SEL-300G Relay Setting Categories

The relay is equipped with two protection element setting groups, Group 1 and Group 2. Group 1 and Group 2 contain:

- Enable settings for specific protection elements
- Settings to define element pickups and time delays
- SELOGIC control equation element torque controls
- SELOGIC control equation event report triggers
- Nondedicated SELOGIC control equation timers and latches
- SELOGIC control equations for trip and close signals
- SELOGIC control equations for relay output contacts

The relay protects the generator using one setting group at a time. You control which setting group is enabled using serial port commands and settings provided in the Global setting category. The relay always uses the Global settings, regardless of which setting group presently is enabled.

The Global settings define:

- SELOGIC control equations for setting group selection
- Breaker monitor function settings
- Optoisolated input debounce timer settings
- Local bit settings
- Front-panel display settings
- Display point settings

Settings configuring the relay Sequential Events Recorder (SER) function are entered using the **SET R** command. These settings are always active, regardless of whether setting Group 1 or setting Group 2 is enabled.

This section of the instruction manual describes each protection function. The outputs from each function are defined, and setting recommendations or guidelines for their calculation are provided. Where appropriate, logic diagrams and element operating characteristic diagrams also are provided.

Section 3: Auxiliary Function Settings describes settings for the demand meter, dc monitor, setting group selection, breaker monitor, optoisolated input debounce timers, and the SER function settings.

Section 4: SELOGIC Control Equations describes SELOGIC control equations in general, and the trip, close, event trigger, and output contact control equations in particular.

Refer to ***Section 6: Enter Relay Settings*** for complete relay ***Settings Sheets*** showing each of the relay settings and their ranges in the order that they are entered.

PROTECTION ELEMENT SELECTION GUIDELINES

The SEL-300G provides protection elements suitable for applications protecting many different generators. Use Table 2.1 to help select the protection elements to enable for specific applications.

Table 2.1: Recommended Protection Elements by Generator Grounding Method

Element/Function	High-Impedance Grounded	Resistance Grounded	Solidly Grounded
21 Backup Element Mho Distance (D) or Compensator Distance (DC)	Available[a]	Available[a]	Available[a]
24 Volts/Hertz Element	Recommended	Recommended	Recommended
27 Undervoltage	Optional	Optional	Optional
32 Reverse/Low-Forward Power	Recommended	Recommended	Recommended
40 Loss-of-Field	Recommended	Recommended	Recommended
46 Negative-Sequence Overcurrent	Recommended	Recommended	Recommended
50N/51N Neutral Overcurrent	Suggested[b]	Suggested[b]	Recommended
50P Phase Overcurrent	Not Recommended	Not Recommended	Recommended
51C/51V Voltage-Controlled/ Voltage-Restrained Time-Overcurrent	Available[a]	Available[a]	Available[a]

Element/Function	High-Impedance Grounded	Resistance Grounded	Solidly Grounded
59 Overvoltage	Optional	Optional	Optional
64G 100% Stator Ground Elements	Recommended	Suggested[c]	Not Recommended
78 Out-of-Step	Recommended	Recommended	Recommended
81 Over-/Underfrequency Elements	Recommended	Recommended	Recommended
81 AC Abnormal Frequency Scheme	Available	Available	Available
87 Current Differential Elements (Available with Models 0300G1 and 0300G3)	Suggested for large machines	Optional	Optional
87N Ground Differential Element (Available with Models 0300G0 and 0300G2)	Not Recommended	Suggested[b]	Suggested[b]

[a] Select no more than one of 21D, 21DC, 51C, or 51V elements for backup protection
[b] If neutral CT is available
[c] If neutral PT is available

RELAY CONFIGURATION SETTINGS

The SEL-300G provides several settings that configure the relay for the particular generator being protected. These settings appear in Group settings or in the Global settings.

Note: All relay settings are made in secondary quantities (amps, volts, ohms, or watts).

Group 1, Group 2 Configuration Setting Descriptions

Relay Identifier: (39 Characters)

RID = GENERATOR

Terminal Identifier: (59 Characters)

TID = TERMINAL

The Relay Identifier and Terminal Identifier settings are text settings that allow you to identify this relay application. The text you enter in these settings appears at the top of the serial port command responses sent from the relay. These identifiers assist you in analyzing data collected from individual relays. Suggested identifier settings include the name, number, or position of the generator protected and primary or backup protection designation for the relay itself.

Phase (IA, IB, IC) CT Ratio (1–10000; 5 A models) (1–50000; 1 A models) CTR = 100

Differential (IA87, IB87, IC87) CT Ratio (1–10000; 5 A models) (1–50000; 1 A models) CTRD = 100

Neutral (IN) CT Ratio (1–10000) CTRN = 100

Phase (VA, VB, VC) PT Ratio (1.00–10000.00) PTR = 100.00

Neutral (VN) PT Ratio (1.00–10000.00) PTRN = 100.00

Synch-Voltage (VS) PT Ratio (1.00–10000.00) PTRS = 100.00

Protection instrument transformer ratio settings allow the relay to display meter and event report quantities in primary amperes, kilovolts, megawatts, and megavars. Enter these settings as a ratio to one. For instance, a 1000:5-phase current transformer ratio yields CTR = 200.

Figure 2.3 illustrates selection of the CTRN and PTRN settings. When a neutral current transformer is connected directly in the generator neutral circuit, set CTRN equal to the current transformer ratio to one.

In applications where the neutral current transformer is connected in the grounding transformer secondary circuit, set CTRN equal to current transformer ratio to one. The relay will report the current in the grounding transformer secondary rather than the generator primary neutral current.

In high-impedance grounded applications, the relay VN input can be directly connected to the generator grounding transformer secondary if neutral voltages during ground faults will not exceed 300 Vac. When directly connected, set PTRN equal to the grounding transformer voltage ratio to one. If an auxiliary transformer is connected between the grounding transformer secondary and the relay, calculate PTRN by multiplying the grounding transformer ratio by the auxiliary transformer ratio to one.

In resistance grounded applications, calculate PTRN directly using the neutral voltage transformer ratio to one.

The synchronism checking PT may be connected phase-to-phase or phase-to-ground on the system side of the generator circuit breaker. Select a PT ratio so the voltage presented to the relay is nominally equal to the phase-to-phase or phase-to-ground voltage presented to the relay by the generator PTs. The relay does not require that the synchronism PT connection match the generator PT connection. For instance, you may elect to use open-delta connected generator PTs and a phase-to-ground connected synchronism PT.

Nominal Machine Voltage (80.0–140.0 V l-l, 3-wire delta voltage input) VNOM = 115.0
(80.0–208.0 V l-l, 4-wire wye voltage input)

Calculate VNOM by dividing the generator rated line-to-line voltage by the phase transformer ratio, PTR. In a typical 13.8 kV generator application, when PTR = 120, VNOM = 115. The relay volts/hertz, voltage-restrained overcurrent, and directional power elements use the VNOM setting.

Nominal Machine Current (1.0–10.0 A; 5 A Models) INOM = 5.0
(0.2–2.0 A; 1 A Models)

Calculate INOM using the following equation:

$$\text{INOM} = \frac{\left[\dfrac{\text{MVA} \bullet 1000}{1.73 \bullet \text{kV}}\right]}{\text{CTR}} \text{ A}$$

where

MVA = generator rated output, MVA
kV = generator rated phase-to-phase voltage, kV
CT = phase current transformer ratio to one

The relay directional power, negative-sequence overcurrent, and differential elements use the INOM setting.

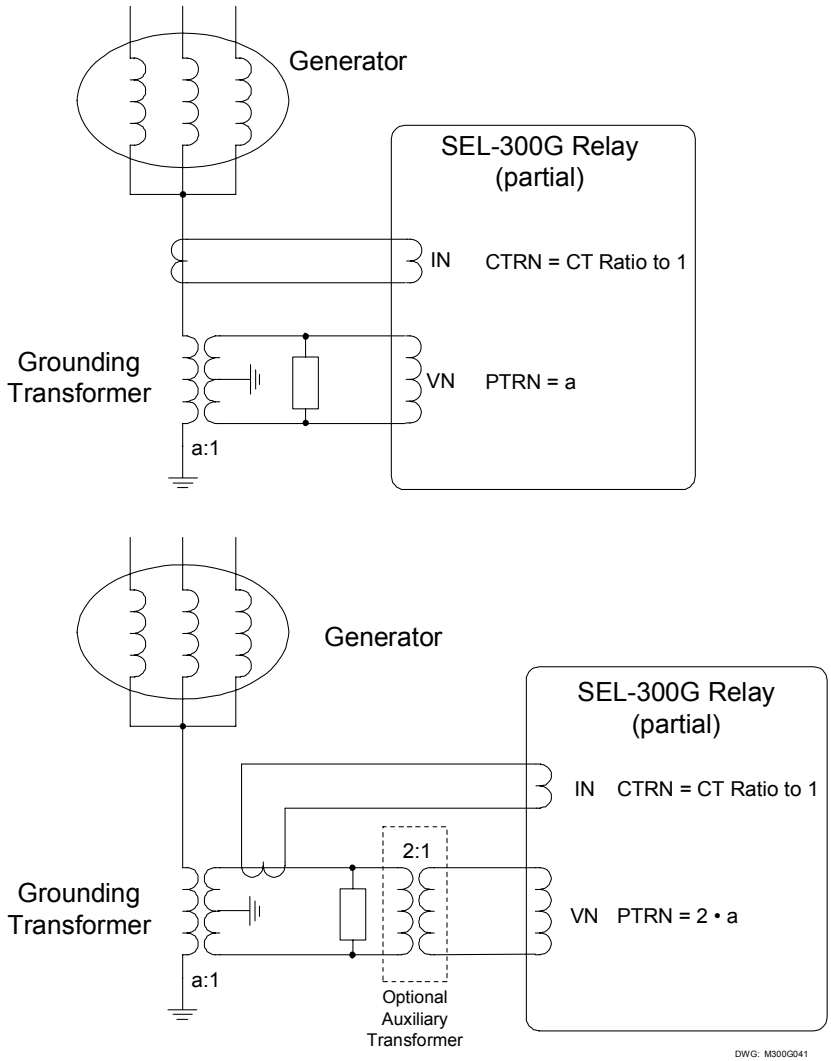

Figure 2.3: PTRN, CTRN Setting Examples

Phase Rotation (ABC, ACB) PHROT = ABC

Set PHROT to define the phase labeling standard for the generator being protected. Set PHROT = ABC when B-phase voltage lags A-phase voltage by 120°. Set PHROT = ACB when B-phase voltage leads A-phase voltage by 120°.

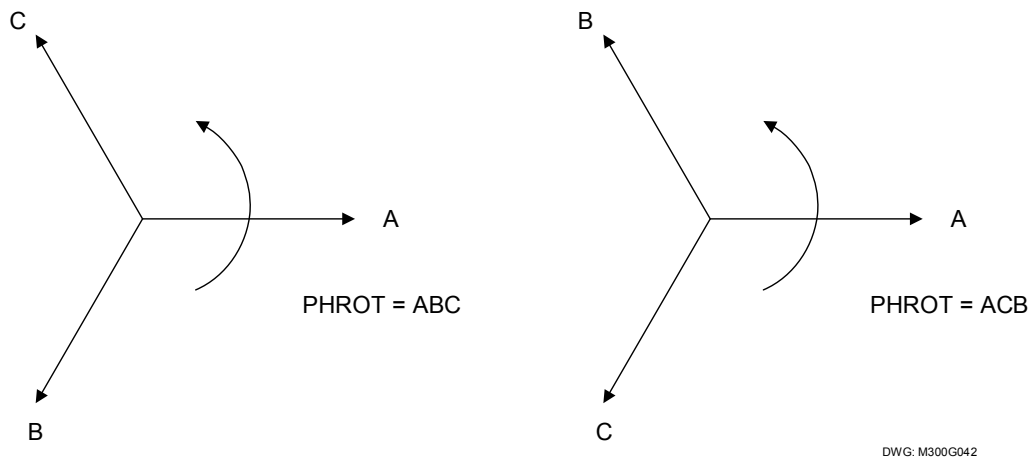

Figure 2.4: Phase Rotation Settings

Enable Backup Protection (N, D, DC, V, C; firmware ≥ R320)	EBUP = D
Enable Backup Protection (N, D, V, C; firmware ≤ R320)	EBUP = D
Enable Load Encroachment (Y, N)	ELE = N (firmware ≥ R320)
Enable Volts/Hertz Protection (Y, N)	E24 = Y
Enable Synchronism Checking Function (Y, N)	E25 = Y (0300G2 & 0300G3)
Enable Undervoltage (U/V) Protection (Y, N)	E27 = Y
Enable Reverse/Low-Forward Power Protection (Y, N)	E32 = Y
Enable Loss-of-Field Protection (Y, N)	E40 = Y
Enable Neg-Seq Overcurrent (O/C) Protection (Y, N)	E46 = Y
Enable O/C Protection (Y, N)	E50 = N
Enable 87-Input O/C Protection (Y, N)	E50_87 = N (0300G1 & 0300G3)
Enable Time-O/C Protection (Y, N)	E51 = Y
Enable Overvoltage (O/V) Protection (Y, N)	E59 = Y
Enable 100% Stator Ground Protection (Y, N)	E64 = Y
Enable Out-of-Step Protection (1B, 2B, N)	E78 = 1B
Enable Frequency Protection (N, 1–6)	E81 = 2
Enable Abnormal Frequency Scheme (N, 1–6)	E81AC = 6
Enable Differential Protection (G, T, N)	E87 = G (0300G1 and 0300G3)
Enable Ground Differential Protection (Y, N)	E87N = Y (0300G0 and 0300G2)

The settings above enable specific protection functions. These settings are described fully elsewhere in this section or in ***Section 13: Differential Element Setting***.

Enable SELOGIC control equations (0–16)	ESV = 6
Enable Set/Reset Latch Variables (0–16)	ESL = 5

The ESV setting enables nondedicated SELOGIC control equation variables. Each variable is equipped with settable time-delay pickup and time-delay dropout timers. The ESL setting enables nondedicated SELOGIC control equation latch variables. ***Section 4: SELOGIC Control Equations*** fully describes these enables and their SELOGIC control equations.

Enable Demand Metering (THM, ROL) EDEM = ROL

The relay demand metering function can use thermal (THM) or rolling average (ROL) demand calculation types. These options and other settings associated with the demand metering function are described in ***Section 3: Auxiliary Function Settings***.

Global Configuration Setting Descriptions (SET G)

Length of Event Report (15, 30, 60, 180 cycles; firmware ≥ R320) LER = 15

Length of Event Report (15, 30 cycles; firmware < R320) LER = 15

Length of Prefault in Event Report (1 to LER-1 cycles) PRE = 4

The LER and PRE settings configure the full-length event reports that the SEL-300G saves. The LER setting defines the event report length in cycles.

When you set LER = 15, the relay saves 29 event reports that are each 15 cycles long. When you set LER = 30, the relay saves 15 event reports that are each 30 cycles long.

When you set LER = 60, the relay saves 8 event reports that are each 60 cycles long. When you set LER = 180, the relay saves 2 event reports that are each 180 cycles long.

The PRE setting defines the amount of pretrigger data stored with each event report. Setting PRE = 4 causes the relay to save four cycles of pretrigger data with each report. This typically gives a good snapshot of the generator conditions prior to the fault or triggering condition.

Front-Panel Time Out (OFF, 0–30 min) FP_TO = 15

The front-panel LCD display will return to its default display after FP_TO minutes of no activity. This feature improves the security of the front-panel setting entry interface in the event that setting entry is interrupted.

Date Format (MDY, YMD) DATE_F = MDY

The DATE_F setting allows you to change the relay date presentation format to either the North American standard (Month/Day/Year) or the engineering standard (Year/Month/Day).

DC Battery Voltage Level 1 (OFF, 20–300 Vdc) DCHIP = OFF

DC Battery Voltage Level 2 (OFF, 20–300 Vdc) DCLOP = OFF

The DCHIP and DCLOP settings configure operation of the station dc monitoring function, described in detail in ***Section 3: Auxiliary Function Settings***.

Note: All relay settings are made in secondary quantities (amps, volts, ohms, or watts).

Nominal Frequency (50, 60 Hz) FNOM = 60

Set FNOM equal the generator rated operating frequency. The relay volts/hertz element and frequency tracking function use the FNOM setting.

Phase Potential Connection (D, Y) DELTA_Y = Y

Set DELTA_Y to define whether relay ac potentials are supplied by open-delta (DELTA_Y = D) or four-wire wye (DELTA_Y = Y) connected generator voltage transformers. See ***Section 5: Installation*** for connection examples.

Group Change Delay (0–400 sec) TGR = 1

The TGR setting defines the amount of time that the SS1 and SS2 SELOGIC control equation logic results must remain stable before the relay enables a new setting group. Typically, a one second delay is sufficient. Additional description and examples are provided in ***Section 4: SELOGIC Control Equations***.

Setting Group Selection

SS1 = 1

SS2 = 0

SS1 and SS2 are SELOGIC control equations that help define when setting Group 1 and setting Group 2 are active. With the settings shown above, SS1 is set equal to logical 1, thus setting Group 1 always is active. ***Section 3: Auxiliary Function Settings*** provides additional discussion and examples.

BKR Monitor

The settings associated with the breaker monitor function are described in ***Section 3: Auxiliary Function Settings***.

Optoisolated Input Timers

Each optoisolated input is equipped with an internal time-delay pickup timer. These timers serve as settable debounce or recognition delay timers. Application and setting selections for these timers is described in ***Section 3: Auxiliary Function Settings***.

Local Bit Settings

The relay is equipped with several nondedicated Relay Word bits whose logical condition is controlled by the relay front-panel **CONTROL** commands. You can use these Relay Word bits to enable or disable protection functions, change tripping logic, close output contacts, etc. Use of this feature is described in ***Section 4: SELOGIC Control Equations***.

Display Point Settings

The relay display point function allows you to display messages, including measured analog quantities, on the relay front-panel LCD. You configure the messages to display the present state of the generator or relay by defining the indicating condition and the message to be displayed when that condition is true and false. ***Section 4: SELOGIC Control Equations*** provides additional descriptions and setting examples.

DISTANCE ELEMENTS

Element Description

Functional Description

The SEL-300G provides a two-zone distance element designed for backup distance protection for system phase-to-phase and three-phase faults. Each zone is equipped with independently settable forward reach, reverse offset, maximum torque angle, step-up transformer compensation, and

definite-time delay. You can select either mho distance or compensator distance as the operating principle of the distance elements.

Compensator distance elements are included for users who desire a different operating principle for the system backup distance relaying. Compensator distance elements consist of phase-to-phase and three-phase elements and are implemented in SEL-300G relays with firmware versions R320 and later.

In typical applications, you may wish to set the Zone 1 element to reach into the generator step-up transformer, and with a short time delay, to provide backup protection for low-side transformer winding and bushing phase-to-phase faults. The Zone 2 element may then be set to reach through the step-up transformer into the system and with a longer time delay. You can use the load encroachment feature to prevent misoperation of the distance elements due to heavy load conditions.

The relay includes a user settable SELOGIC control equation to disable the distance elements, as well as supervision by the 60LOP loss-of-potential logic and a simple load encroachment function to provide three-phase element security under maximum generator loading conditions.

Setting Descriptions—Mho Elements

Enable System Backup Protection (N, D, DC, V, C; firmware ≥ R320) EBUP = D

Enable Backup Protection (N, D, V, C; firmware < R320) EBUP = D

21 Mho Elements

Set EBUP = D to enable phase Mho distance elements. If system backup protection is not required, set EBUP = N. When EBUP ≠ D, the 21P1P, 21P1T, 21P2P, and 21P2T Relay Word bits are inactive and the relay hides the following relay settings (Z1R through 21PTC), which do not need to be entered. (See Voltage-Controlled/Restrained Time-Overcurrent Elements for EBUP = V and C setting descriptions.)

Zone 1 Phase Distance Reach (OFF, 0.1 to 100.0 ohms) Z1R = 8.0

Zone 1 Phase Distance Offset (0.0 to 10.0 ohms) Z1O = 0.0

Set Z1R to define the forward (toward the system) phase distance reach, defined in secondary ohms. Set ELE = Y to include a load encroachment function for distance element security under heavy load. This will eliminate load impedance concerns when selecting the Z1R reach setting. Setting Z1R = OFF disables the element and causes the relay to hide the balance of the settings associated with Zone 1.

The Z1O setting defines the element offset. When an SEL-300G0 or SEL-300G2 Relay is applied with current transformers as shown in Figure 5.17 or Figure 5.18, you may wish to apply a positive offset equal to the generator impedance as backup generator phase-to-phase fault protection.

Zone 1 Maximum Torque Angle (90 to 45 degrees) MTA1 = 88

Set MTA1 equal to the angle of the transformer plus system impedance defined by the Zone 1 reach setting. The relay places the distance element maximum reach along a line at the angle defined by the MTA1 setting.

Zone 1 Transformer Compensation Angle (0, –30, +30 degrees) Z1CMP = 0

Use the Z1CMP setting to compensate the phase distance element for the presence of a delta-wye generator step-up transformer between the generator and system. When the element is not set to reach through the step-up transformer, set Z1CMP = 0. When the element is set to

respond to phase faults on the high side of a delta-wye transformer, and the system phase-to-neutral voltage phase angle leads the generator phase-to-neutral voltage phase angle by 30°, set Z1CMP = –30°. When the system phase-to-neutral voltage phase angle lags the generator phase-to-neutral voltage phase angle by 30°, set Z1CMP = +30°.

Zone 1 Phase Distance Time Delay (0.00 to 400.00 s) Z1D = 0.00

The Z1D setting defines the Zone 1 element definite-time delay.

Zone 2 Phase Distance Reach (OFF, 0.1 to 100.0 ohms) Z2R = 16.0

Zone 2 Phase Distance Offset (0.0 to 10.0 ohms) Z2O = 0.0

Set Z2R to define the forward (toward the system) phase distance reach, defined in secondary ohms. Set ELE = Y to include a load encroachment function for distance element security under heavy load. This will eliminate load impedance concerns when selecting the Z2R reach setting. Setting Z2R = OFF disables the element and causes the relay to hide the balance of the settings associated with Zone 2.

The Z2O setting defines the Zone 2 element offset. When an SEL-300G0 or SEL-300G2 Relay is applied with current transformers as shown in Figure 5.17 or Figure 5.18, you may wish to apply a positive offset equal to the generator impedance as backup generator fault protection.

Zone 2 Maximum Torque Angle (90 to 45 degrees) MTA2 = 88

Set MTA2 equal to the angle of the transformer plus system impedance defined by the Zone 2 reach setting. The relay places the distance element maximum reach along a line at the angle defined by the MTA2 setting.

Zone 2 Transformer Compensation Angle (0, –30, +30 degrees) Z2CMP = 0

Use the Z2CMP setting to compensate the phase distance element for the presence of a delta-wye generator step-up transformer between the generator and system. When the element is not set to reach through the step-up transformer, set Z2CMP = 0. When the element is set to respond to phase faults on the high side of a delta-wye transformer, and the system phase-neutral voltage phase angle leads the generator phase-to-neutral voltage phase angle by 30°, set Z2CMP = –30°. When the system phase-to-neutral voltage phase angle lags the generator phase-neutral voltage phase angle by 30°, set Z2CMP = +30°.

Zone 2 Phase Distance Time Delay (0.00 to 400.00 s) Z2D = 0.00

The Z2D setting defines the Zone 2 element definite-time delay.

Minimum Power Factor (OFF, 0.98 to 0.50; firmware < R320) MPF = 0.80

Maximum Generator Load (0.5 to 3.0 per unit; firmware < R320) MXLD = 1.2

See ***Setting Descriptions—Load Encroachment*** on page 2-14.

21P Element Torque Control (SELOGIC control equation) 21PTC = !3PO

The phase distance elements are enabled when the result of 21PTC equals logical 1. The elements are blocked when the 21PTC SELOGIC control equation result equals logical 0. Typically, the 21PTC SELOGIC control equation should be set so the elements are enabled when the generator main circuit breaker is closed (!3PO). Other supervisory conditions may be added if your application requires.

Note: Loss-of-potential (60LOP) supervision is built into the element logic so it does not need to be added to the 21PTC SELOGIC control equation setting.

Relay Word Bits

Relay Word Bit	Function Description	Typical Applications
21P1P	Instantaneous Zone 1 Phase Mho Distance Element Pickup	Indication, Testing, SER, Event Triggering
21P1T	Time-Delayed Zone 1 Phase Mho Distance Element Pickup	Indication, Testing, Tripping
21P2P	Instantaneous Zone 2 Phase Mho Distance Element Pickup	Indication, Testing, SER, Event Triggering
21P2T	Time-Delayed Zone 2 Phase Mho Distance Element Pickup	Indication, Testing, Tripping

Setting Descriptions—Compensator Elements

21 Compensator Elements (available in relays with firmware versions R320 and later)

Set EBUP = DC to enable compensator distance elements. When EBUP ≠ DC, the MPP1P, MABC1P, 21C1P, 21C1T, MPP2P, MABC2P, 21C2P, and 21C2T Relay Word bits are inactive and the relay hides the following relay settings (Z1C through 21CTC), which do not need to be entered.

Zone 1 Compensator Reach (OFF, 0.1 to 100.0 ohms) Z1C = 8.0

Zone 1 Compensator Offset (0.0 to 10.0 ohms) Z1CO = 0.0

Set Z1C to define the forward (toward the system) phase distance reach, defined in secondary ohms. Set ELE = Y to include a load encroachment function for distance element security under heavy load. This will eliminate load impedance concerns when selecting the Z1C reach setting. Setting Z1C = OFF disables the element and causes the relay to hide the balance of the settings associated with Zone 1.

The Z1CO setting defines the element offset for the three-phase faults. When an SEL-300G0 or SEL-300G2 Relay is applied with current transformers as shown in Figure 5.17 or Figure 5.18, you may wish to apply a positive offset equal to the generator impedance as backup generator phase fault protection.

Zone 1 Compensator Time Delay (0.00 to 400.00 s) Z1CD = 0.00

The Z1CD setting defines the Zone 1 element definite-time delay.

Zone 1 Phase-Phase Current FD (0.5 to 170.0 A) 50PP1 = 0.5

Set 50PP1 to its minimum value unless higher value is required by special condition.

Zone 1 Pos-Seq Impedance Angle (90 to 45 deg) ZANG1 = 88

Set ZANG1 equal to the angle of the transformer plus system impedance defined by the Zone 1 reach setting. The relay places the distance element maximum reach along a line at the angle defined by the ZANG1 setting.

Zone 2 Compensator Reach (OFF, 0.1 to 100.0 ohms) Z2C = 16.0

Zone 2 Compensator Offset (0.0 to 10.0 ohms) Z2CO = 0.0

Set Z2C to define the forward (toward the system) phase distance reach, defined in secondary ohms. Set ELE = Y to include a load encroachment function for distance element security under heavy load. This will eliminate load impedance concerns when selecting the Z2C reach setting. Setting Z2C = OFF disables the element and causes the relay to hide the balance of the settings associated with Zone 2.

The Z2CO setting defines the element offset for the three-phase faults. When an SEL-300G0 or SEL-300G2 Relay is applied with current transformers as shown in Figure 5.17 or Figure 5.18, you may wish to apply a positive offset equal to the generator impedance as backup generator three-phase fault protection.

Zone 2 Compensator Time Delay (0.00 to 400.00 s) Z2CD = 0.00

The Z2CD setting defines the Zone 2 element definite-time delay.

Zone 2 Phase-Phase Current FD (0.5 to 170.0 A) 50PP2 = 0.5

Set 50PP2 to its minimum value unless higher value is required by special condition.

Zone 2 Pos.-Seq. Impedance Angle (90 to 45 deg) ZANG2 = 85

Set ZANG2 equal to the angle of the transformer plus system impedance defined by the Zone 2 reach setting. The relay places the distance element maximum reach along a line at the angle defined by the ZANG2 setting.

21C Element Torque Control (SELOGIC control equation) 21CTC = !3PO

The phase distance elements are enabled when the result of 21CTC equals logical 1. The elements are blocked when the 21CTC SELOGIC control equation result equals logical 0. Typically, the 21CTC SELOGIC control equation should be set so the elements are enabled when the generator main circuit breaker is closed (!3PO). Other supervisory conditions may be added if your application requires.

Note: Loss-of-potential (60LOP) supervision is built into the element logic so it does not need to be added to the 21CTC SELOGIC control equation setting.

Relay Word Bits

Relay Word Bit	Function Description	Typical Applications
MPP1P	Instantaneous Zone 1 Phase-Phase Compensator Distance Element Pickup	Indication, Testing, SER, Event Triggering
MABC1P	Instantaneous Zone 1 Three-Phase Compensator Distance Element Pickup	Indication, Testing, SER, Event Triggering
21C1P	Instantaneous Zone 1 Phase-Phase or Three-Phase Compensator Distance Element Pickup	Indication, Testing, SER, Event Triggering
21C1T	Time-Delayed Zone 1 Phase-Phase or Three-Phase Compensator Distance Element Pickup	Indication, Testing, Tripping
MPP2P	Instantaneous Zone 2 Phase-Phase Compensator Distance Element Pickup	Indication, Testing, SER, Event Triggering
MABC2P	Instantaneous Zone 2 Three-Phase Compensator Distance Element Pickup	Indication, Testing, SER, Event Triggering
21C2P	Instantaneous Zone 2 Phase-Phase or Three-Phase Compensator Distance Element Pickup	Indication, Testing, SER, Event Triggering
21C2T	Time-Delayed Zone 2 Phase-Phase or Three-Phase Compensator Distance Element Pickup	Indication, Testing, Tripping

Setting Descriptions—Load Encroachment

Enable Load Encroachment (Y, N) ELE = N

The setting ELE is available in relays with firmware ≥ R320 only.

Minimum Power Factor (OFF, 0.98 to 0.50) MPF = 0.80

Maximum Generator Load (0.5 to 3.0 per unit) MXLD = 1.2

The MPF and MXLD settings define the operation of a simple load encroachment function that increases the security of the phase distance elements under heavy load. If load encroachment security is desired, set MPF to the minimum rated generator power factor under maximum load conditions. Set the maximum emergency generator power output in per unit of the generator rating. If load encroachment security is not desired, set MPF = OFF to disable the function. Also you can disable the function by setting ELE = N. When load encroachment is disabled, the ZLOAD Relay Word bit is inactive.

Relay Word Bits

Relay Word Bit	Function Description	Typical Applications
ZLOAD	Load encroachment element	Inhibit Phase Distance Elements

Setting Calculation

Information Needed

- Zone 1 and Zone 2 reach apparent impedance magnitude and angle
- Generator Step-Up Transformer Connection (only required if Zone 1 or Zone 2 mho element is used and set to reach through the transformer)
- Zone 1 and Zone 2 coordination time delay
- Generator Rated Minimum Power Factor and Maximum Emergency Loading

Recommendations

The phase distance elements provide backup phase fault protection for the system, step-up transformer, and generator. Zone 2 is typically set to reach far out onto the system. Usually, a fault study is necessary to determine the magnitude and angle of the apparent impedance seen by the generator relay during a system fault. Set the reach (Z*n*R or Z*n*C) equal to the apparent positive-sequence impedance calculated by fault study for a three-phase fault at the desired reach limit point on the system. All distance element reaches and offsets are set in secondary ohms.

Note: For firmware versions lower than R320 (or lower than R240 for older hardware), set the Z*n*R equal to three times the apparent impedance when Z*n*CMP = +30 or –30.

After determining the minimum reach setting required to obtain desired sensitivity with all system breakers closed, you may wish to determine the element sensitivity when one or more local bus circuit breakers are open. This operating contingency review shows with which relays the Zone 2 element time delay must coordinate.

Zone 1 is usually set shorter than Zone 2, with a corresponding shorter time delay.

The distance element offset required for each zone depends on the location of the relay current transformers. If current transformers are connected near the generator neutral, as in Figure 5.14 and Figure 5.15, set the distance element offsets equal to the generator X'_d. If current transformers are connected as in Figure 5.17 and Figure 5.18, a nonzero offset can provide some backup phase fault protection for the generator. Offsets for Zone 1 and Zone 2 should be set equal, unless some special performance characteristic is desired.

The transformer compensation settings, Z1CMP and Z2CMP, instruct the relay to compensate the mho distance elements for the influence of the delta-wye connected generator step-up transformer. When an element is not set to reach through the step-up transformer, set Z*n*CMP = 0, where *n* = 1 or 2. When the element is set to respond to phase faults on the high side of a delta-wye transformer and the system phase-to-neutral voltage phase angle **leads** the generator phase-to-neutral voltage phase angle by 30°, set Z*n*CMP = –30°. When the system phase-to-neutral voltage phase angle **lags** the generator phase-to-neutral voltage phase angle by 30°, set Z*n*CMP = +30°. Note that the compensator distance elements inherently compensate for the step-up transformer.

In order to obtain desired sensitivity, it may be necessary to set the Zone 1 and/or Zone 2 element reach very long. Due to the long reach setting, many phase distance relays would pick up during heavy load. The SEL-300G distance elements are supervised by a simple load encroachment function (when enabled) that prevents distance element misoperation under heavy load. To enable load encroachment supervision, set ELE = Y, MPF equal to the generator minimum power factor, and MXLD to the maximum emergency load rating of the generator in per unit of continuous rating. The relay uses these settings to define a region in the impedance plane where operation of the three-phase elements is prevented. This allows you to make phase distance element reach settings without concern for misoperation under heavy generator load.

Phase Distance Tripping

Because the phase distance elements detect system faults of an enduring and potentially serious nature, tripping generally is applied to the generator main breaker, the field breaker, the prime mover, and the generator lockout relay. Refer to ***Section 4: SELOGIC Control Equations*** for more detail and examples of tripping SELOGIC control equations.

Element Operating Characteristics

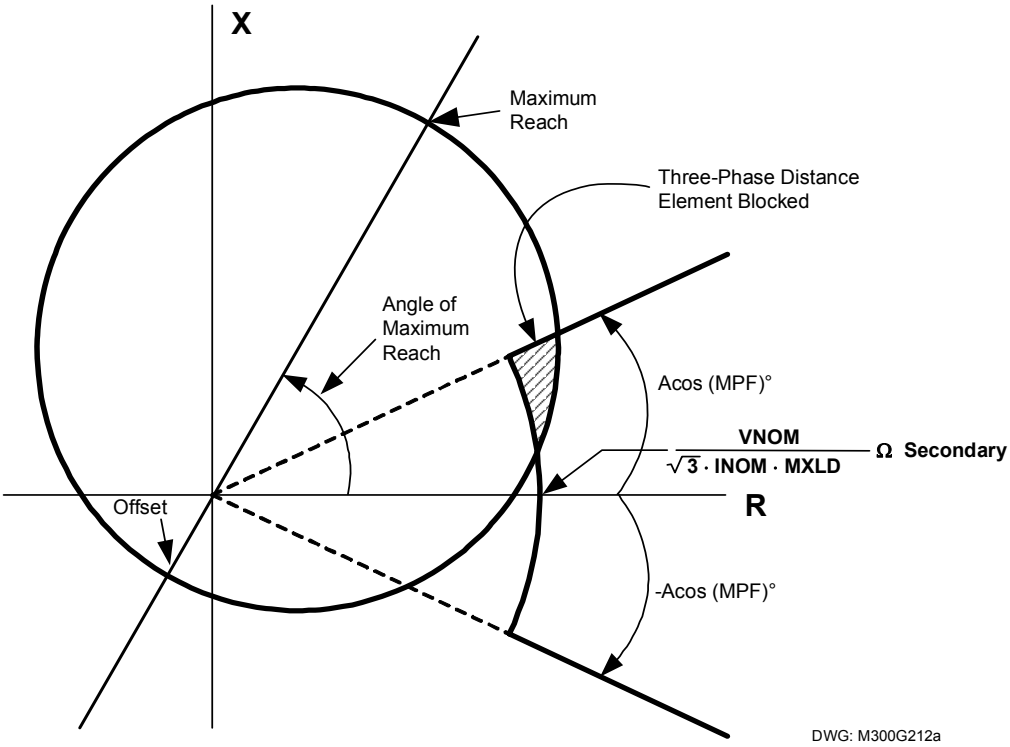

Figure 2.5: Distance Element Operating Characteristics

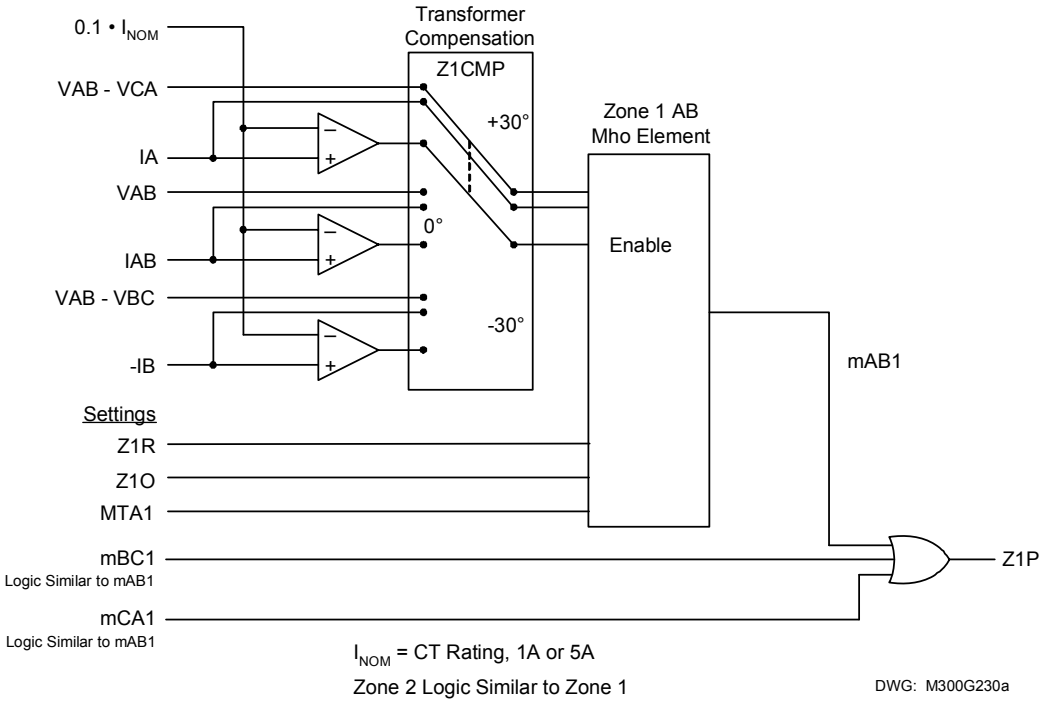

Figure 2.6: Zone 1 Mho Element Logic

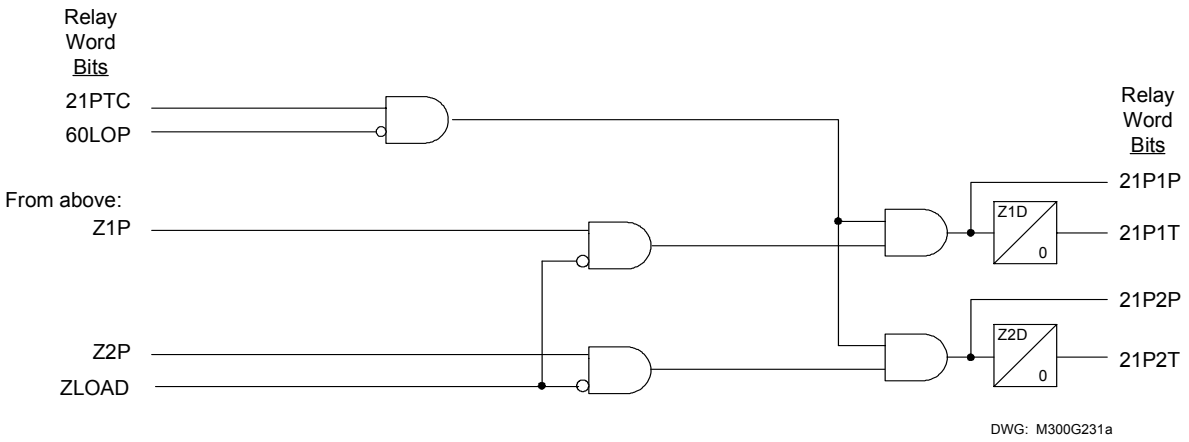

Figure 2.7: Mho Distance Element Logic

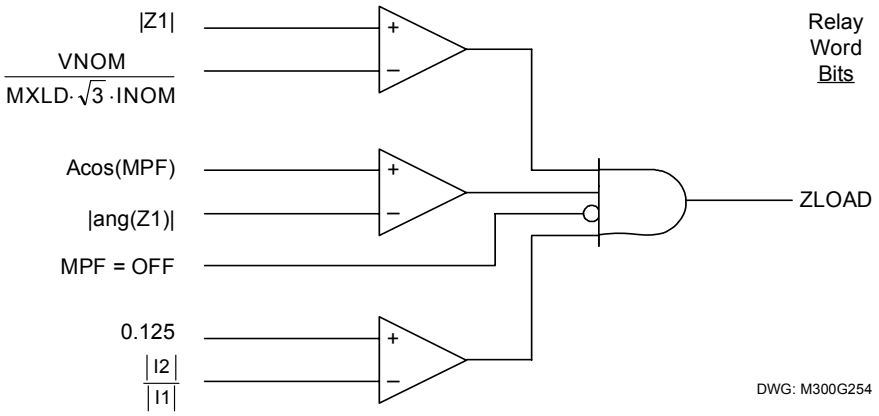

Figure 2.8: Load Encroachment Logic

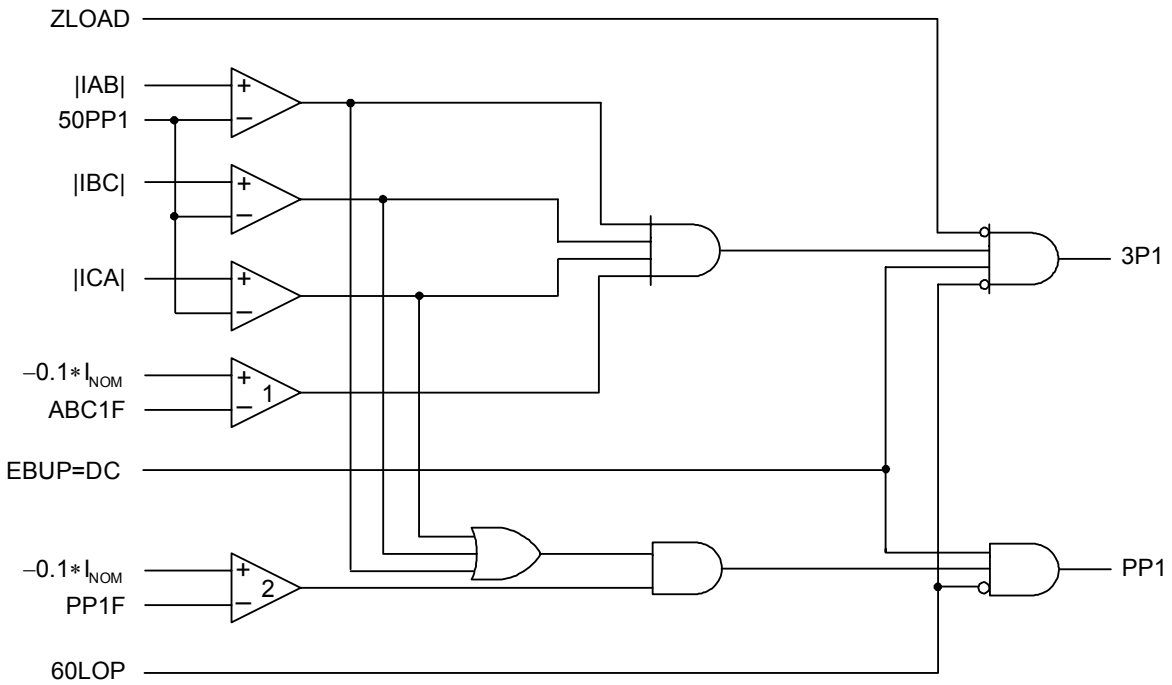

Figure 2.9: Zone 1 Compensator Element Logic

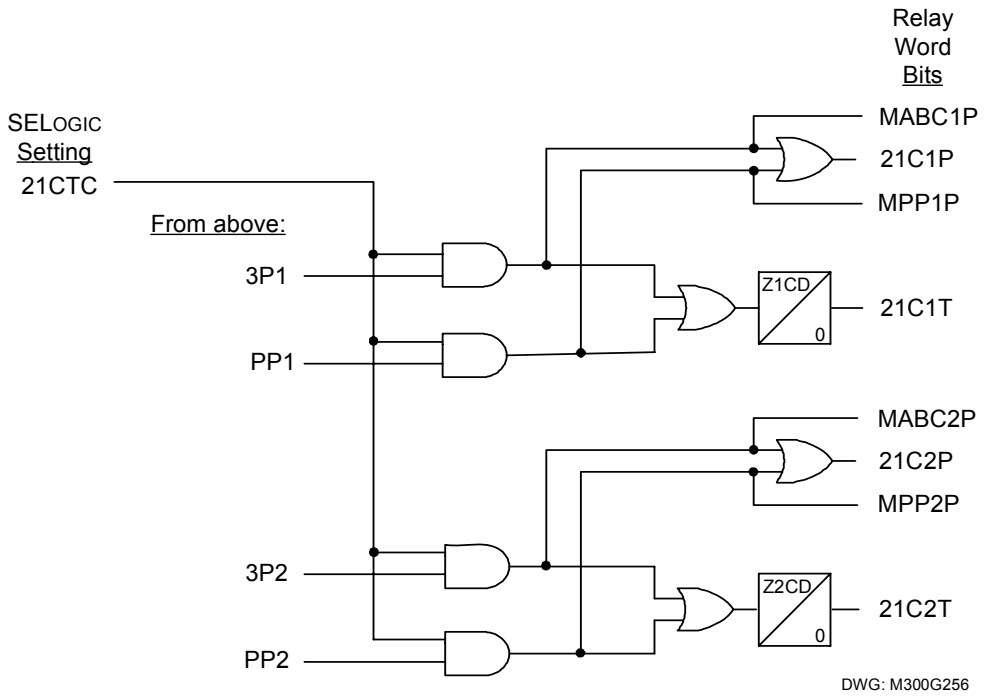

Figure 2.10: Compensator Distance Element Logic

VOLTS/HERTZ ELEMENT

Element Description

Functional Description

Overexcitation occurs when a generator or transformer magnetic core becomes saturated. When this happens, stray flux is induced in nonlaminated components, causing overheating. In the SEL-300G Relay, overexcitation is detected by a volts/hertz element. The SEL-300G provides a sensitive definite-time volts/hertz element, plus a tripping element with a composite operating time. The relay calculates the present machine volts/hertz as a percent of nominal, based on the present and nominal voltages and frequencies. The settings VNOM and FNOM define the nominal machine voltage and frequency, respectively.

Figure 2.16 shows the volts/hertz element logic. If the 24TC SELOGIC control equation is true and the present volts/hertz exceed the 24D1P setting, the relay asserts the 24D1 Relay Word bit and starts the 24D1D timer. If the condition remains for 24D1D seconds, the relay asserts the 24D1T Relay Word bit. Typically, you should apply this element as an overexcitation alarm.

For volts/hertz tripping, the relay provides a time-integrating element with a settable operating characteristic. You can set the element to operate as an inverse-time element, a composite element with an inverse-time characteristic and a definite-time characteristic, or as a dual-level, definite-time element. In any case, the element provides a linear reset characteristic with a settable reset time. This element also is supervised by the 24TC torque-control setting.

The volts/hertz tripping element has a percent-travel operating characteristic similar to that employed by an induction-disk time-overcurrent element. This characteristic coincides well with the heating effect that overexcitation has on the generator components.

Setting Descriptions

Enable Volts/Hertz Protection (Y, N) E24 = Y

Set E24 = Y to enable volts/hertz protection elements. If volts/hertz protection is not required, set E24 = N. When E24 = N, the 24TC, 24D1, 24D1T, 24C2, 24C2T, and 24CR Relay Word bits are inactive and the following relay settings are hidden and do not need to be entered.

Level 1 Volts/Hertz Pickup (100–200%) 24D1P = 105

Level 1 Time Delay (0.00–400.00 s) 24D1D = 1.00

The Level 1 element should be applied as an overexcitation alarm. The 24D1P setting defines the percent volts/hertz alarm pickup. The 24D1 Relay Word bit asserts without time delay when the measured machine volts/hertz exceed the 24D1P setting. The 24D1T Relay Word bit asserts 24D1D seconds after 24D1 asserts if the measured volts/hertz remain above the 24D1P setting.

Level 2 Composite Curve Shape (OFF, DD, ID, I) 24CCS = DD

The 24CCS setting defines the overexcitation tripping element time-delay characteristic or disables the element when set equal to OFF. Set 24CCS = OFF if you do not require Level 2 volts/hertz protection. When 24CCS = OFF, the other Level 2 settings are hidden and do not need to be entered.

When 24CCS = DD:

The element operates with a dual-level, definite-time characteristic, illustrated in Figure 2.11.

Level 2 Pickup One (100–200%)	24D2P1 = 110
Level 2 Time-Delay One (0.00–400.00 s)	24D2D1 = 60.00
Level 2 Pickup Two (100–200%)	24D2P2 = 118
Level 2 Time-Delay Two (0.00–400.00 s)	24D2D2 = 6.00

The SEL-300G asserts the 24C2 Relay Word bit without time delay when the machine volts/hertz exceed either the 24D2P1 or 24D2P2 setting. If the volts/hertz percentage is greater than the 24D2P1 setting, but less than the 24D2P2 setting, the relay asserts the 24C2T Relay Word bit in 24D2D1 seconds. When the volts/hertz percentage is greater than the 24D2P2 setting, the relay asserts the 24C2T Relay Word bit in 24D2D2 seconds. 24D2P1 must be set less than 24D2P2.

When 24CCS = ID:

The element operates with a composite inverse/definite-time characteristic illustrated in Figure 2.12.

Level 2 Inverse-Time Pickup (100–200%)	24IP = 105
Level 2 Inverse-Time Curve (0.5, 1.0, 2.0)	24IC = 2
Level 2 Inverse-Time Factor (0.10–10.0 s)	24ITD = 0.100
Level 2 Pickup Two (100–200%)	24D2P2 = 175
Level 2 Time-Delay Two (0.00–400.00 s)	24D2D2 = 0.1

The 24IP setting defines the pickup point of the inverse-time portion of the operating time curve. The SEL-300G asserts the 24C2 Relay Word bit without time delay when the machine volts/hertz exceed the 24IP setting. The 24IC setting defines the element operating time curve shape. The 24ITD setting defines the inverse element operate time in seconds when the machine volts/hertz equals 200 percent. The 24D2P2 and 24D2D2 settings define the pickup and definite operating time of the definite-time portion of the composite curve. The relay asserts the 24C2T Relay Word bit in time defined by the inverse curve when the measured volts/hertz are less than the 24D2P2 setting. The relay asserts the 24C2T Relay Word bit in time defined by the 24D2D2 definite-time settings when the measured volts/hertz are greater than the 24D2P2 setting. 24IP must be set less than 24D2P2.

When 24CCS = I:

The element operates with a simple inverse-time characteristic illustrated in Figure 2.13, Figure 2.14, or Figure 2.15, depending on the 24IC setting.

Level 2 Inverse-Time Pickup (100–200%)	24IP = 105
Level 2 Inverse-Time Curve (0.5, 1.0, 2.0)	24IC = 2
Level 2 Inverse-Time Factor (0.10–10.0 s)	24ITD = 0.1

The 24IP setting defines the pickup point of the inverse-time portion of the operating time curve. The SEL-300G asserts the 24C2 Relay Word bit without time delay when the machine volts/hertz exceed the 24IP setting. The 24IC setting defines the curve shape. The 24ITD setting defines the inverse element operate time in seconds when the machine volts/hertz equal 200 percent. The relay asserts the 24C2T Relay Word bit in time defined by the inverse curve when the machine volts/hertz exceed the 24IP setting.

When 24CCS = DD, ID, or I:

Level 2 Reset Time (0.00–400.00 s) 24CR = 240.00

The 24CR setting defines the composite element reset time. When the element times out to trip, it will fully reset 24CR seconds after the applied volts/hertz drop below the element pickup setting. The element reset characteristic is linear, so if the element times 60 percent toward a trip, it will fully reset (0.6 • 24CR) seconds after the applied volts/hertz drop below the element pickup setting. When the element is reset, the relay asserts the 24CR Relay Word bit.

24 Element Torque Control (SELOGIC control equation) 24TC = !60LOP

Both volts/hertz elements are disabled when the 24TC SELOGIC control equation equals logical 0. The elements are allowed to operate when the 24TC SELOGIC control equation equals logical 1. Typically, the 24TC SELOGIC control equation should be set so the volts/hertz elements are allowed to operate when there is no loss-of-potential (60LOP) condition detected. Other supervisory conditions may be added if your application requires.

Relay Word Bits

Relay Word Bit	Function Description	Typical Applications
24D1	Level 1 Volts/Hertz Instantaneous Pickup	Indication, Event Triggering, SER Triggering, Testing
24D1T	Level 1 Volts/Hertz With Definite-Time Delay	Indication, Event Triggering, SER Triggering
24C2	Level 2 Volts/Hertz Pickup	Indication, Event Triggering, SER Triggering, Testing
24C2T	Level 2 Volts/Hertz Trip	Tripping, SER Triggering
24CR	Level 2 Volts/Hertz Reset	Testing

Setting Calculation

Information Needed

- Generator Manufacturer's Overexcitation Limit Curve
- Step-up Transformer Manufacturer's Overexcitation Limit Curve on Generator Voltage Base (if transformer overexcitation protection is desired)

Recommendations

Use the Level 1 volts/hertz element as an overexcitation alarm. Set 24D1P equal to or greater than 105 percent, but less than the minimum pickup of the Level 2 element. Use a 24D1D time delay of 1.0 second to allow time for manual correction of an overexcitation condition prior to a trip.

Use the Level 2 volts/hertz element as an overexcitation tripping element. Select the dual level, composite inverse, or simple inverse operating time characteristic to conform with the generator manufacturer's recommendations.

Volts/Hertz Tripping

Volts/Hertz tripping elements are usually used to trip the main generator breaker and the field breaker and transfer auxiliaries, if needed. Refer to ***Section 4: SELOGIC Control Equations*** for more detail and examples of tripping SELOGIC control equations.

Element Operating Characteristics

Figure 2.11 and Figure 2.12 are similar to *IEEE C37.102-1987 IEEE Guide for AC Generator Protection Figure 4.5.4-1 and Figure 4.5.4-2*.

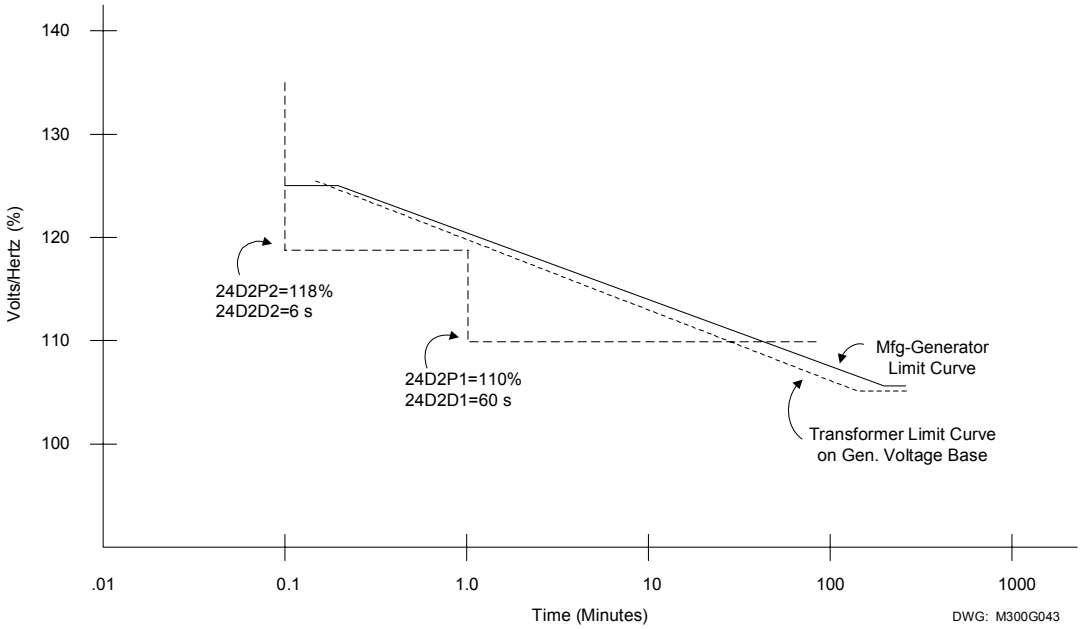

Figure 2.11: Dual-Level Volts/Hertz Time-Delay Characteristic, 24CCS = DD

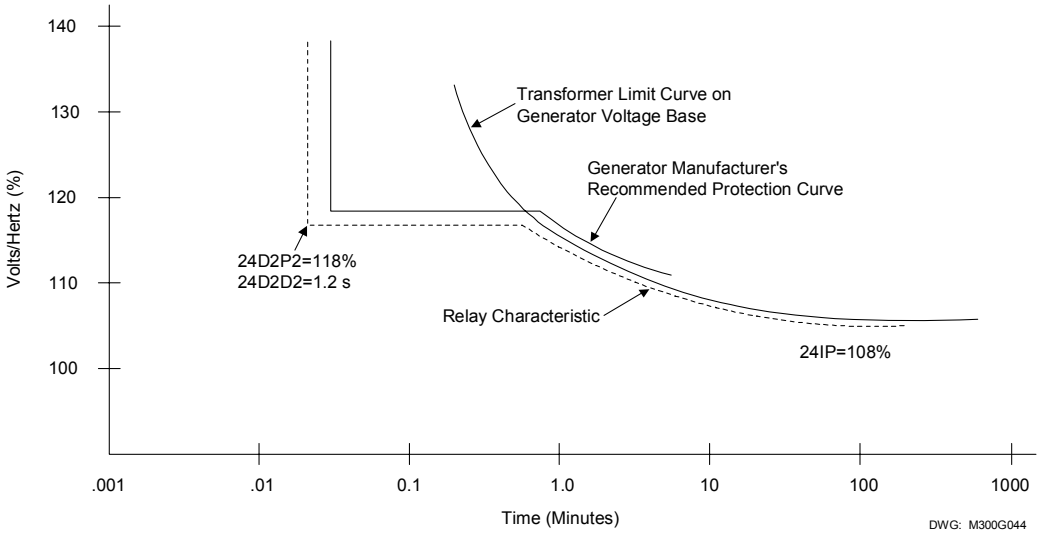

Figure 2.12: Composite Inverse/Definite-Time Overexcitation Characteristic, 24CCS = ID

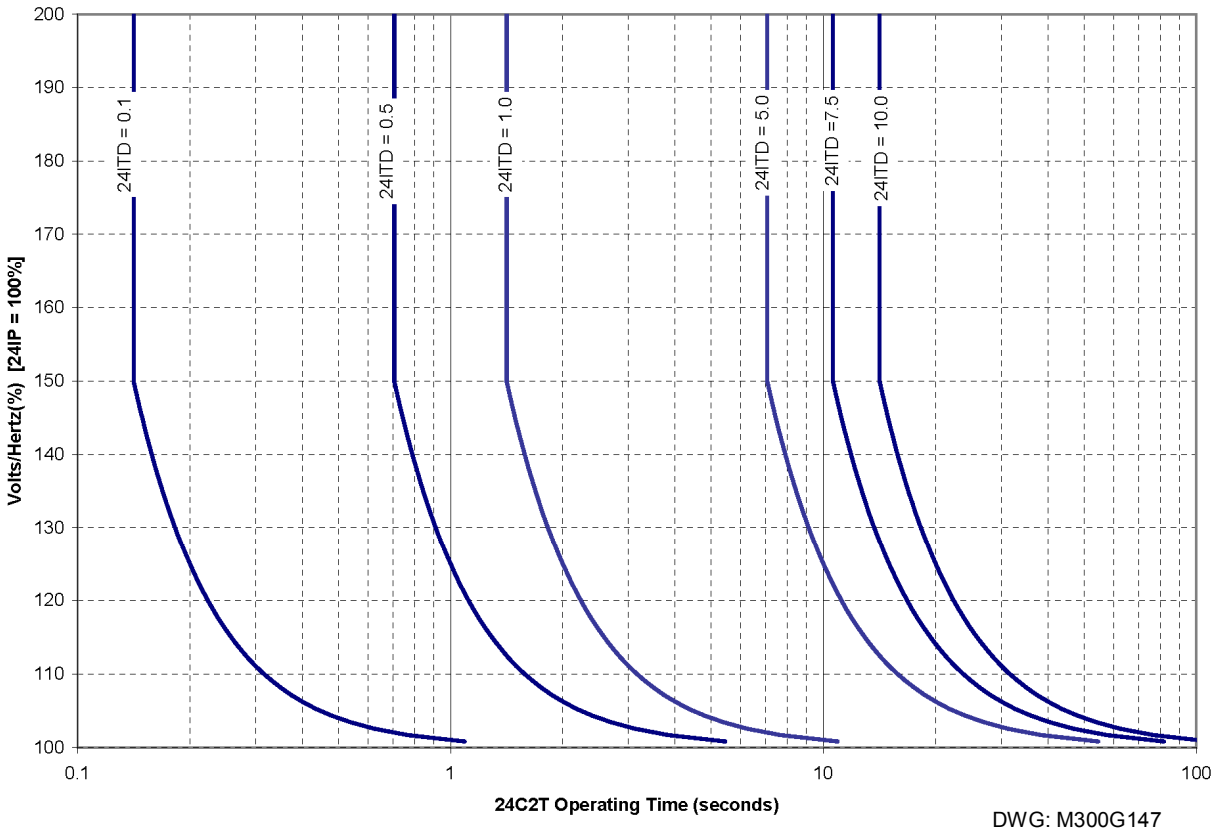

$$t_p = \frac{24ITD}{\left(\frac{\left(\frac{V_{PP}}{freq} \bullet \frac{FNOM}{VNOM}\right)}{\frac{24IP}{100\%}} - 1\right)^{0.5}} \text{ seconds}$$

Figure 2.13: Volts/Hertz Inverse-Time Characteristic, 24IC = 0.5

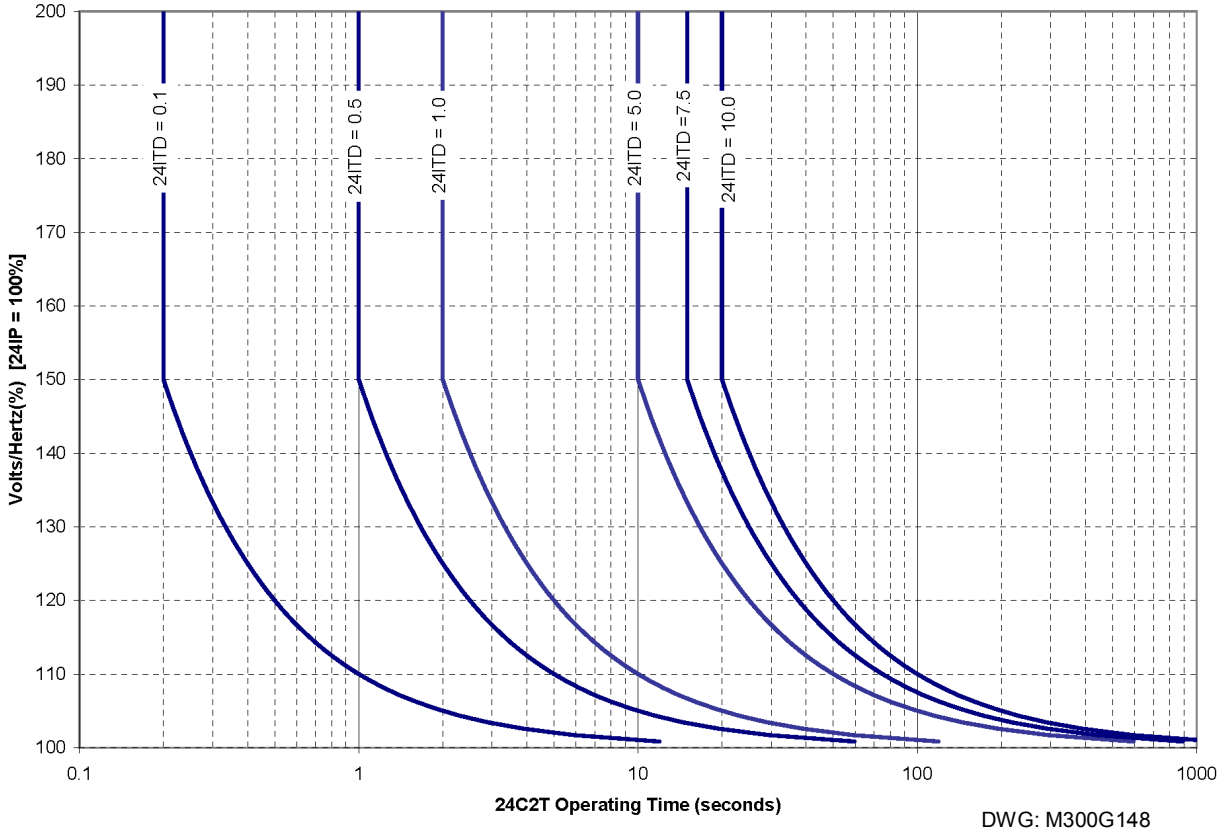

$$t_p = \frac{24ITD}{\left(\frac{\left(\frac{V_{PP}}{freq} \bullet \frac{FNOM}{VNOM}\right)}{\frac{24IP}{100\%}} - 1\right)^1} \text{ seconds}$$

Figure 2.14: Volts/Hertz Inverse-Time Characteristic, 24IC = 1

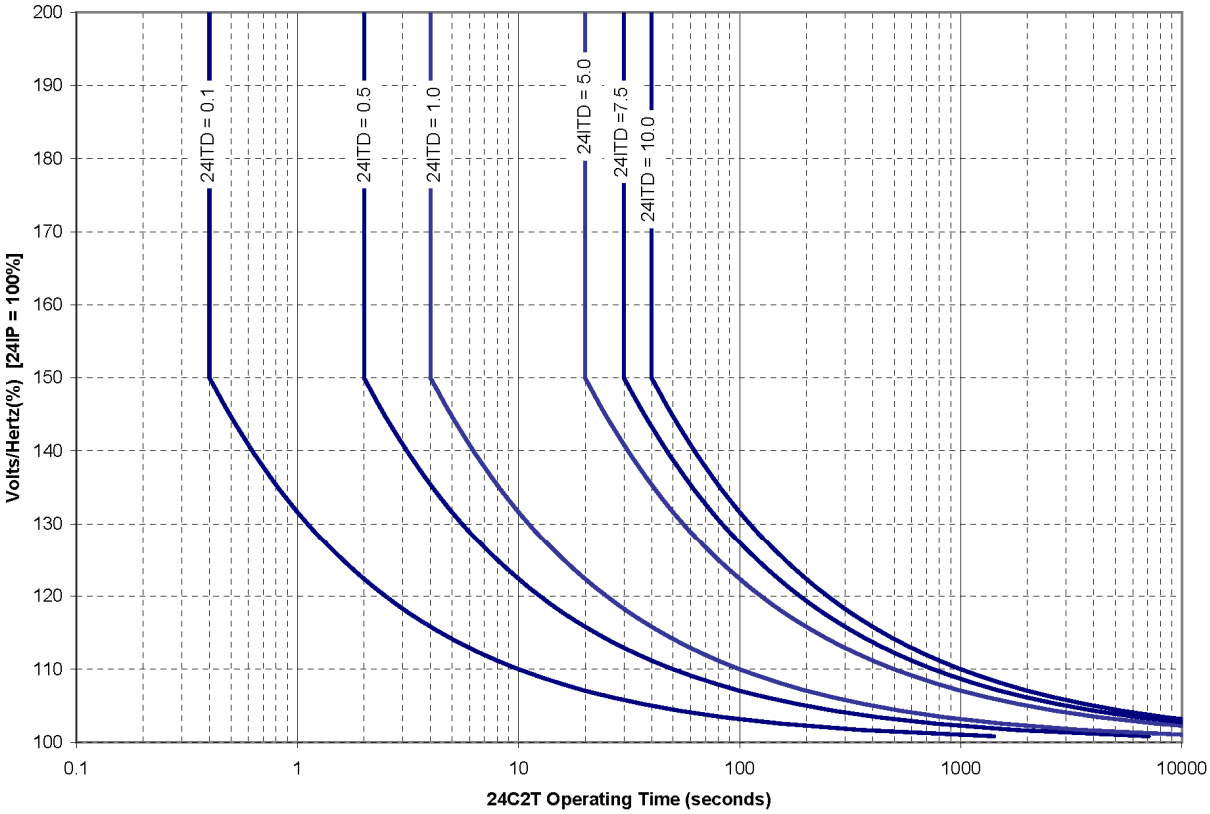

DWG: M300G149

$$t_p = \frac{24ITD}{\left(\frac{\left(\frac{V_{PP}}{freq} \bullet \frac{FNOM}{VNOM}\right)}{\frac{24IP}{100\%}} - 1\right)^2} \text{ seconds}$$

Figure 2.15: Volts/Hertz Inverse-Time Characteristics, 24IC = 2

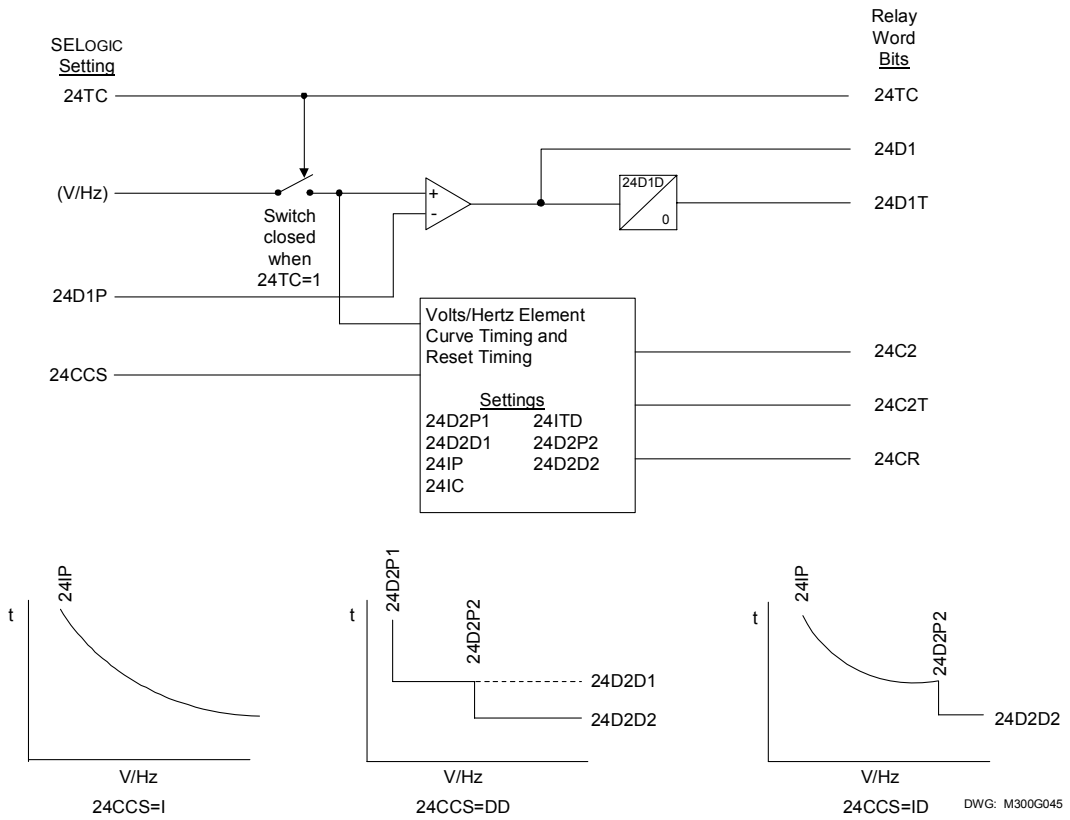

Figure 2.16: Volts/Hertz Element Logic Diagram

REVERSE/LOW-FORWARD POWER ELEMENT

Element Description

Functional Description

Generator motoring occurs when prime mover input power to the generator is cut off while the generator is connected to the system. When this happens, the generator acts as a synchronous motor to drive the prime mover shaft. In steam turbine prime mover applications, generator motoring can quickly damage the turbine by causing overheating. In applications of other prime movers, motoring can cause mechanical damage and/or unsafe operating conditions.

Antimotoring protection in the SEL-300G is provided by a reverse/low-forward power element. This element measures the real-power flow from the generator. If the generator real-power output drops below the element threshold, the relay asserts the Relay Word bit associated with the instantaneous threshold and starts the element definite timer.

Two reverse-power thresholds are provided. The threshold settings are made in per unit of rated generator power. One per unit generator power is defined by the VNOM and INOM relay settings. If two steps of reverse-power tripping are not required, you may elect to apply one threshold as a tripping interlock for sequential generator tripping. The element setting ranges are broad enough to permit application of a threshold as a generator overload element.

The reverse/low-forward power element is supervised by the 32PTC torque-control setting.

Setting Descriptions

Enable Reverse/Low-Forward Power Protection (Y, N) E32 = Y

Set E32 = Y to enable reverse/low-forward power protection elements. If reverse/low-forward power protection is not required, set E32 = N. When E32 = N, the 32PTC, 32P1, 32P1T, 32P2, and 32P2T Relay Word bits are inactive and the following relay settings are hidden and do not need to be entered.

Level 1 Power Threshold (±0.0015 to ±3.0000 pu) 32P1P = –0.0500

Level 1 Power Time Delay (0.01–400.00 s) 32P1D = 20.00

The Level 1 element should be applied as a tripping function. The 32P1P setting defines the per unit power threshold. With the example setting above, the 32P1 Relay Word bit asserts without time delay when the measured power exceeds 0.05 per unit into the machine. The 32P1T Relay Word bit asserts 32P1D seconds after 32P1 asserts. One per unit power is defined by the VNOM and INOM settings.

Level 2 Power Threshold (OFF, ±0.0015 to ±3.0000 pu) 32P2P = 0.0200

Level 2 Power Time Delay (0.01–400.00 s) 32P2D = 1.00

The Level 2 element may be applied as a sequential tripping interlock or as an overload function. The 32P2P defines the per unit power threshold. As set above, the 32P2 Relay Word bit asserts without time delay when the measured power falls below 0.02 per unit out of the machine. The 32P2T Relay Word bit asserts 32P2D seconds after 32P2 asserts. One per unit power is defined by the VNOM and INOM settings. Set 32P2P = OFF to disable the second threshold and hide the 32P2D setting.

32 Element Torque Control (SELOGIC control equation) 32PTC = !60LOP

The reverse/low-forward power elements are disabled when the 32PTC SELOGIC control equation equals logical 0. The elements are allowed to operate when the 32PTC SELOGIC control equation equals logical 1. With the example setting, the reverse power function is allowed to operate when there is no loss-of-potential condition detected. You may wish to torque control this function with the !3PO condition to disable the reverse power elements when the generator breaker is open.

Relay Word Bits

Relay Word Bit	Function Description	Typical Applications
32P1	Level 1 Reverse/Low-Forward Power Pickup	Indication, Event Triggering, SER Triggering, Testing
32P1T	Level 1 Reverse/Low-Forward Power Pickup With Definite-Time Delay	Tripping, SER Triggering, Pickup Definite-Time Delay
32P2	Level 2 Reverse/Low-Forward Power Pickup	Indication, Event Triggering, SER Triggering, Testing
32P2T	Level 2 Reverse/Low-Forward Power Pickup With Definite-Time Delay	Tripping, SER Triggering, Pickup Definite-Time Delay

Setting Calculation

Information Needed

- Prime Mover Manufacturer's Rated Motoring Power and Motoring Withstand Time Limit
- Generator Rated Power

Recommendations

Calculate the prime mover rated motoring power in per unit of generator rated power by dividing motoring power by the generator rating.

$$\text{Per Unit Motoring Power} = \frac{-\text{Rated Motoring Power}}{\text{Generator Rated Power}}$$

Motoring power is negative by definition, since it is flowing into rather than out of the generator.

To ensure that the element securely detects this level of power, the element setting should be adjusted to account for measuring errors in the relay, voltage transformers, and current transformers. A 0.7 to 0.5 multiplier will provide secure detection of motoring conditions as low as 0.02 per unit, suggesting a 32P1P setting of 0.014 to 0.01 per unit. Relay measuring error for the power element is specified as ±0.0015 per unit, ±2 percent of setting.

$$32P1P = (0.7 \text{ to } 0.5) \bullet (\text{Per Unit Motor Power}) \quad \text{per unit}$$

Use a 32P1D time delay of 20.0 to 30.0 seconds or as recommended by the prime mover manufacturer. This delay prevents reverse-power tripping during machine paralleling operations.

Use the Level 2 reverse/low-forward power element as a sequential tripping interlock or an overload element.

When the Level 2 element is applied as a sequential tripping interlock, the 32P2P setting should be set using a low-forward power value, 5 to 10 percent of machine rating. The element only should be permitted to cause a generator breaker trip after the prime mover trip has occurred. The SELOGIC control equations used to implement sequential generator tripping are described in ***Section 4: SELOGIC Control Equations*** of this instruction manual.

When the Level 2 element is applied as an overload element, the 32P2P setting should be set in the range 1.05 to 1.10 per unit. Because the element is implemented as a low-forward power function, the 32P2 Relay Word bit is asserted under normal loading conditions, but deasserted if generator output power exceeds the 32P2P setting. Use the inverted Level 2 element, !32P2**,** to indicate an overload condition. A SELOGIC control equation variable and associated pickup timer may be used to add desired time delay to the overload indication.

Reverse-Power Tripping

For antimotoring protection, reverse and low-forward power elements are used to trip the main generator breaker and the field breaker and transfer auxiliaries, if needed. Refer to ***Section 4: SELOGIC Control Equations*** for more detail and examples of tripping SELOGIC control equations.

Element Operating Characteristics

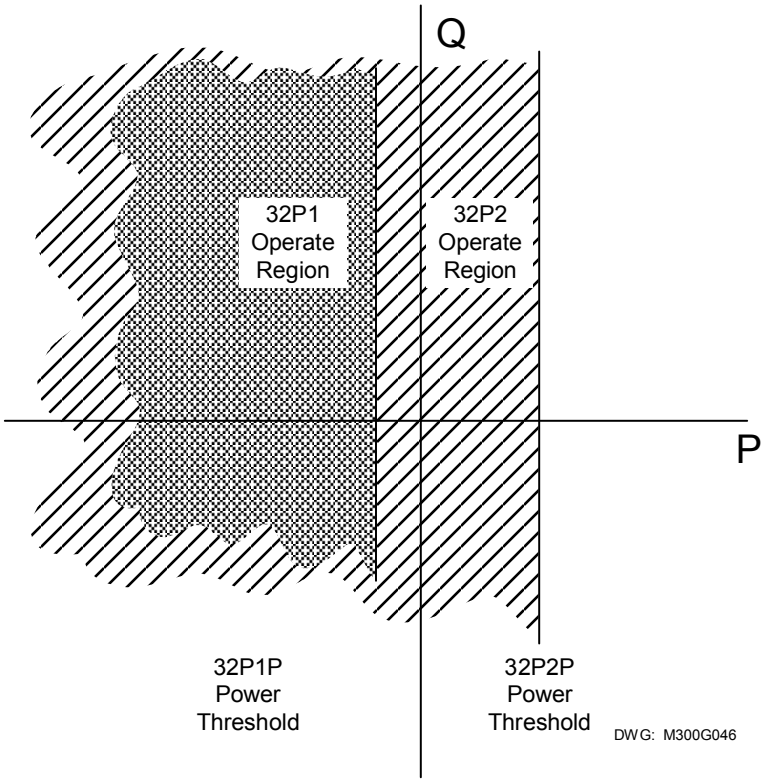

Figure 2.17: Reverse/Low-Forward Power Element Operating Characteristic

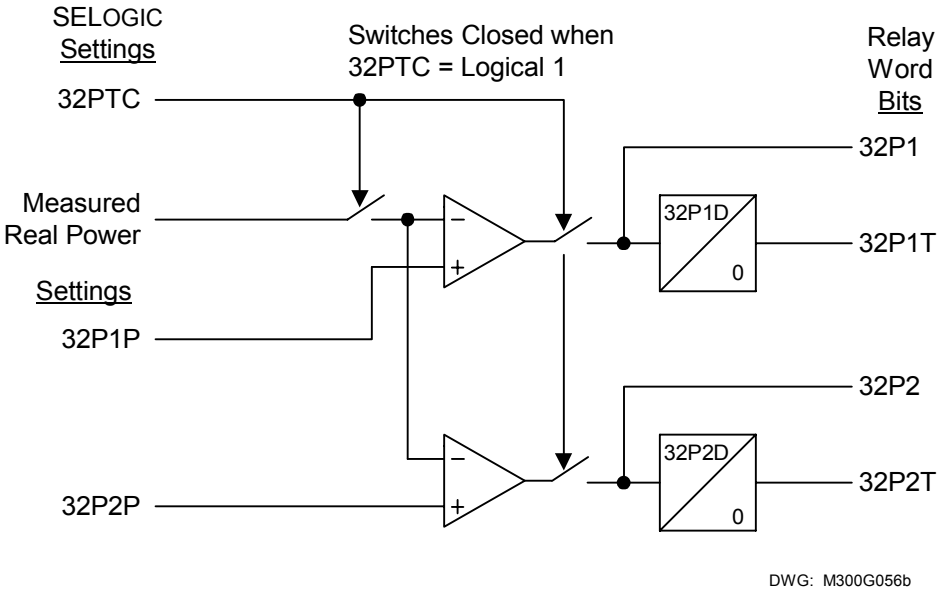

Figure 2.18: Reverse/Low-Forward Power Element Logic Diagram

LOSS-OF-FIELD ELEMENT

Element Description

Functional Description

Loss-of-field current causes the synchronous generator to act as an induction generator. The rotor speed increases, active power output decreases, and the generator pulls vars from system. High currents are induced in the rotor and stator current as high as 2.0 per unit is possible. These high currents cause dangerous overheating in a very short time.

The SEL-300G detects loss-of-field using a pair of offset mho circles. Since loss-of-field affects all three phases, the condition is a balanced one. The SEL-300G uses measured positive-sequence impedance to form the mho circles.

Typically, Zone 1 and Zone 2 are offset from the impedance plane origin by a value equal to one-half the machine transient reactance. Zone 1 is intended to operate with little time delay in the event of a loss-of-field under full load conditions. Zone 2 reaches further and operates with a longer time delay. Zone 2 is intended to trip for loss-of-field conditions that occur under light load conditions.

For compatibility with some existing electromechanical loss-of-field relays, the SEL-300G Zone 2 element may be set with a positive offset. When Zone 2 is used in this manner, the relay provides a directional element with a settable angle characteristic. The Zone 2 element would be used together with an undervoltage element to provide faster tripping if system voltage is depressed during the loss-of-field condition.

The loss-of-field elements are supervised by the 40ZTC torque-control setting.

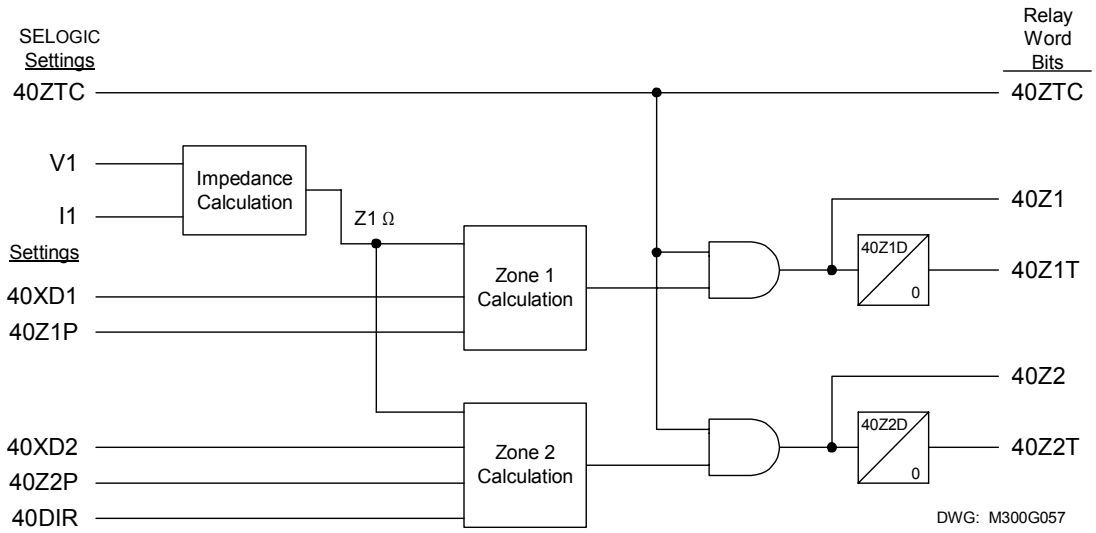

Figure 2.19: Loss-of-Field Logic Diagram

Setting Descriptions

Enable Loss-of-Field Protection (Y, N) E40 = Y

Set E40 = Y to enable loss-of-field protection elements. If loss-of-field protection is not required, set E40 = N. When E40 = N, the 40ZTC, 40Z1, 40Z1T, 40Z2, and 40Z2T Relay Word bits are inactive and the relay does not require that the following settings be entered.

Zone 1 Mho Diameter (OFF, 0.1–100.0 Ω, 5 A relay) 40Z1P = 13.4
(OFF, 0.5–500.0 Ω, 1 A relay)

Zone 1 Offset Reactance (–50.0–0.0 Ω, 5 A relay) 40XD1 = –2.5
(–250.0–0.0 Ω, 1 A relay)

Zone 1 Pickup Time Delay (0.00–400.00 s) 40Z1D = 0.00

The Zone 1 element typically is applied as a tripping function. Zone 1 diameter and offset setting guidelines are described below. Set the Zone 1 offset equal to one-half the generator transient reactance, X'_d, in secondary ohms. Zone 1 loss-of-field tripping is typically performed with short or zero time delay. Any desired delay should be added using the 40Z1D setting.

The 40Z1 Relay Word bit asserts without time delay when the measured positive-sequence impedance falls within the Zone 1 mho circle defined by the offset and diameter settings. The 40Z1D Relay Word bit asserts 40Z1D seconds after 40Z1 asserts.

Zone 2 Mho Diameter (OFF, 0.1–100.0 Ω, 5 A relay) 40Z2P = 13.4
(OFF, 0.5–500.0 Ω, 1 A relay)

Zone 2 Offset Reactance (–50.0–50.0 Ω, 5 A relay) 40XD2 = –2.5
(–250.0–250.0 Ω, 1 A relay)

Zone 2 Pickup Time Delay (0.00–400.00 s) 40Z2D = 0.50

Zone 2 Directional Superv. Angle (–20.0°–0.0°) 40DIR = –10.0

The Zone 2 element typically is applied as a time-delayed tripping function. Zone 2 diameter and offset setting guidelines are described below.

Zone 2 loss-of-field tripping typically is performed with 0.5 to 0.6 second time delay. Set 40Z2D equal to the desired delay.

The 40DIR setting is hidden when 40XD2 < 0.

The 40Z2 Relay Word bit asserts without time delay when the measured positive sequence impedance falls within the Zone 2 mho circle defined by the offset and diameter settings, and below the directional supervision line, if used. The 40Z2T Relay Word bit asserts 40Z2D seconds after 40Z2 asserts.

40Z Element Torque Control (SELOGIC control equation): 40ZTC = !60LOP

The loss-of-field elements are disabled when the 40ZTC SELOGIC control equation equals logical 0. The elements are allowed to operate when the 40ZTC SELOGIC control equation equals logical 1. With the example setting, the loss-of-field elements are allowed to operate when there is no loss-of-potential condition detected.

Note: The loss-of-field elements require at least 0.25 volts of positive-sequence voltage and 0.25 amps of positive-sequence current to operate.

Relay Word Bits

Relay Word Bit	Function Description	Typical Applications
40Z1	Zone 1 Loss-of-Field Pickup	Indication, Event Triggering, SER Triggering, Testing
40Z1T	Zone 1 Loss-of-Field Pickup With Definite-Time Delay	Tripping, SER Triggering
40Z2	Zone 2 Loss-of-Field Pickup	Indication, Event Triggering, SER Triggering, Testing
40Z2T	Zone 2 Loss-of-Field Pickup With Definite-Time Delay	Tripping, SER Triggering

Setting Calculation

Information Needed

- Generator direct axis reactance, X_d, in secondary ohms
- Generator transient reactance, X'_d, in secondary ohms
- Generator rated line-to-line voltage, in secondary volts (VNOM setting)
- Generator rated phase current, in secondary amps (INOM setting)
- When a positive Zone 2 offset is desired, you also need:
  - Step-up transformer reactance XT, and system reactance Xsys, in secondary ohms
  - Generator rated power factor

Recommendations

Two methods are available for loss-of-field protection; negative offset Zone 2 and positive offset Zone 2. Recommendations for both setting methods are provided.

Loss-of-Field Protection Using a Negative Offset Zone 2

When setting Zone 2 with a negative offset, set the Zone 1 diameter equal to 1.0 per unit impedance.

$$40Z1P = \frac{VNOM}{1.73 \bullet INOM} \Omega$$

Note: Typically the X_d is greater than 1 per unit impedance, however if $X_d \leq 1$ per unit impedance, set the 40Z1P shorter such that the worst-case stable power system swing does not enter the Zone 1 characteristic.

Set the Zone 1 offset equal to one-half the generator transient reactance, X'_d, in secondary ohms.

$$40XD1 = \frac{-X'_d}{2} \Omega$$

Zone 1 loss-of-field tripping is typically performed with short or zero time delay.

$$40Z1D = 0.0 \text{ seconds}$$

Set the Zone 2 diameter equal to the machine direct axis reactance, X_d, in secondary ohms.

$$40Z2P = X_d\ \Omega$$

Set the Zone 2 offset equal to the Zone 1 offset.

$$40XD2 = \frac{-X'_d}{2}\ \Omega$$

Set the Zone 2 time delay long enough to avoid incorrect operation during a worst-case stable power system swing condition, typically, equal to 0.5 to 0.6 seconds or according to the generator manufacturer's recommendations.

$$40Z2D = 0.5 \text{ seconds}$$

In this case, the 40DIR setting is hidden.

Loss-of-field protection typically trips the main generator breaker and the field breaker. When applying loss-of-field protection with a negative Zone 2 offset, you can use the time-delay Zone 1 and Zone 2 Relay Word bits, 40Z1T and 40Z2T**,** directly in the generator breaker and field breaker tripping SELOGIC control equations. See ***Section 4: SELOGIC Control Equations*** of this instruction manual for more details and an example.

Loss-of-Field Protection Using a Positive Offset Zone 2

When setting Zone 2 with a positive offset, set the Zone 1 diameter:

$$40Z1P = 1.1 \bullet X_d + \frac{-X'_d}{2}\ \Omega$$

Set the Zone 1 offset equal to one-half the generator transient reactance, X'_d, in secondary ohms.

$$40XD1 = \frac{-X'_d}{2}\ \Omega$$

Traditionally, the Zone 1 delay for this type of scheme is 0.25 seconds.

$$40Z1D = 0.25 \text{ second}$$

Set the Zone 2 diameter using the direct axis reactance and XS, the sum of the step-up transformer reactance XT and system reactance Xsys.

$$40Z2P = 1.1 \bullet X_d + XS\ \Omega$$

where XS = XT + Xsys

Set the Zone 2 offset using the total reactance of XS.

$$40XD2 = XS\Omega$$

Traditionally, the Zone 2 delay for this type of scheme is 1 second.

$$40Z2D = 1.0 \text{ second}$$

A shorter delay traditionally is applied if the Zone 2 element picks up at the same time that an undervoltage condition is detected. This logic is discussed below.

In this case, the 40DIR setting is required. Set 40DIR equal to –20° or the arccosine of the minimum rated power factor, whichever is smaller.

When applying loss-of-field protection with a positive Zone 2 offset, you can use the time-delayed Zone 1 Relay Word bit, 40Z1T, and the long-time-delayed Zone 2 Relay Word bit, 40Z2T, directly in the generator breaker and field breaker tripping SELOGIC control equations.

The traditional application of this scheme provides accelerated (0.25 second) Zone 2 tripping in the event of an undervoltage condition occurring during the loss-of-field. To achieve this accelerated tripping, it is necessary to use a SELOGIC control equation variable and a positive-sequence undervoltage element, 27V1. The undervoltage element generally is set 80 percent of nominal voltage for single machine buses and 87 percent for multimachine buses.

To enable and set the undervoltage element, set

$$E27 = Y$$

$$27V1P = \frac{0.8 \bullet VNOM}{1.732} V$$

Use any SELOGIC control equation variable to define a tripping condition for Zone 2 with undervoltage:

$$SV1 = 27V1 * 40Z2$$

$$SV1PU = 0.25 \text{ seconds}$$

$$SVDO = 0.00 \text{ seconds}$$

The Relay Word bit, SV1T, should be added to the SV4 SELOGIC control equation, along with the Zone 1 and Zone 2 conditions discussed above, to cause generator breaker and field breaker tripping. See ***Section 4: SELOGIC Control Equations*** for additional information on relay tripping logic and detailed setting examples.

Element Operating Characteristics

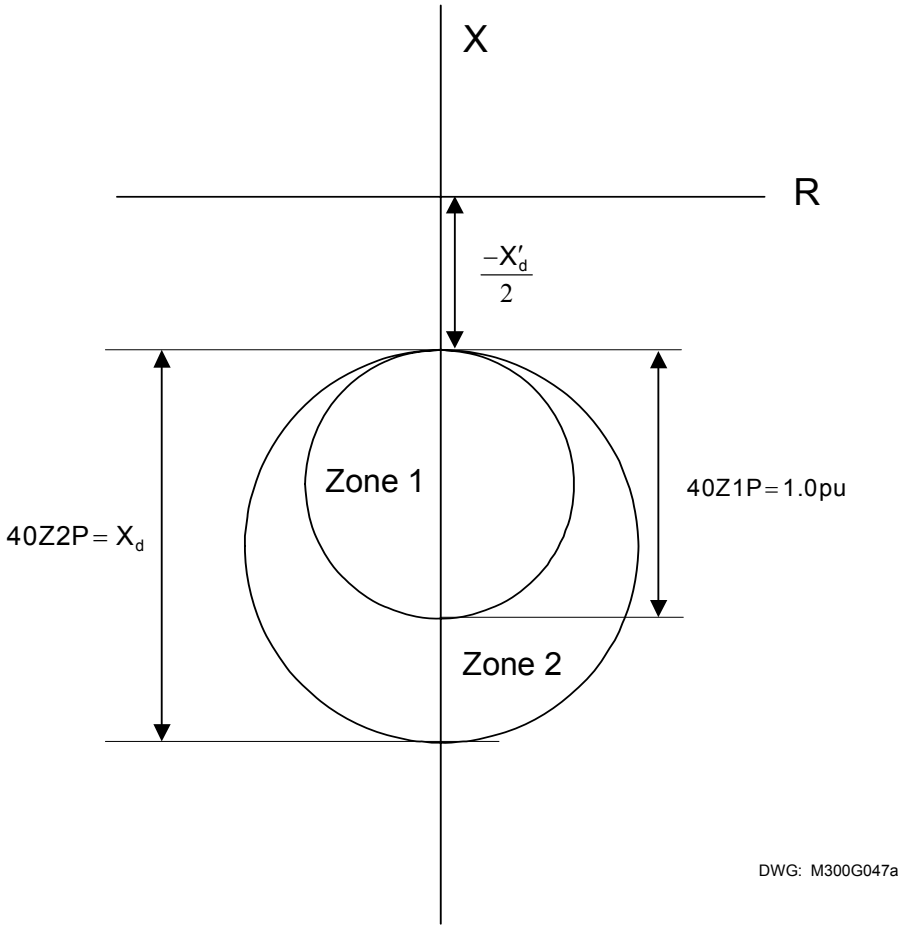

Figure 2.20: Loss-of-Field Element Operating Characteristic, Negative Zone 2 Offset

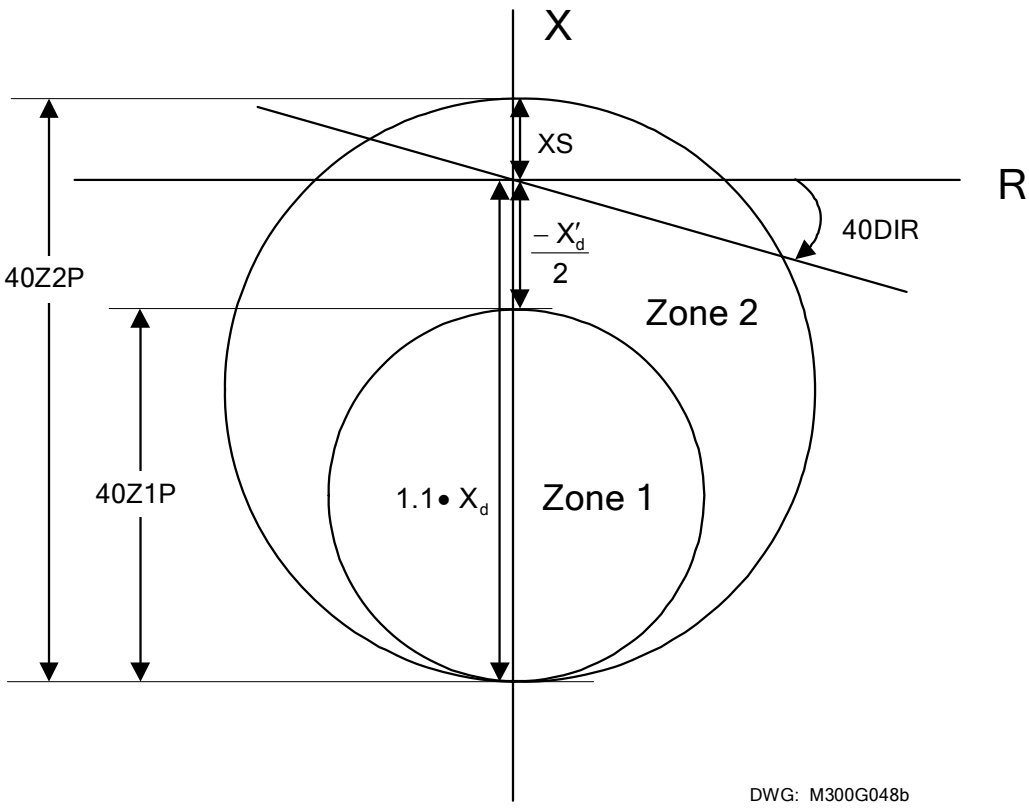

Figure 2.21: Loss-of-Field Element Operating Characteristic, Positive Zone 2 Offset

NEGATIVE-SEQUENCE OVERCURRENT ELEMENTS

Element Description

Functional Description

Generator unbalance current causes high rotor heating. *IEEE Standard C50.13-1977* defined the ability of generators to withstand unbalance current in terms of negative-sequence current. The standard defines a continuous withstand capability as well as a short-time capability, expressed in terms of I_2^2t .

The SEL-300G provides a negative-sequence definite-time overcurrent element suitable for unbalance alarm application and an I_2^2t time-overcurrent element for unbalance current tripping.

The negative-sequence overcurrent elements are supervised by the 46QTC torque-control setting.

Setting Descriptions

Enable Neg.-Seq. Overcurrent Protection (Y, N) E46 = Y

Set E46 = Y to enable negative-sequence overcurrent elements. If negative-sequence overcurrent protection is not required, set E46 = N. When E46 = N, the 46QTC, 46Q1,

46Q1T, 46Q2, and 46Q2T Relay Word bits are inactive and the following settings are hidden and do not need to be entered.

Level 1 Neg.-Seq. O/C Pickup (OFF, 2–100%) 46Q1P = 8

Level 1 Neg.-Seq. O/C Time Delay (0.02–999.90 s) 46Q1D = 5.00

The Level 1 element is typically applied as an unbalance alarm. The pickup is defined in percent of machine nominal phase current, INOM. Any desired delay should be added using the 46Q1D setting. Disable the element by setting 46Q1P = OFF.

The 46Q1 Relay Word bit asserts without time delay when the measured negative-sequence current exceeds 46Q1P percent of INOM. The 46Q1T Relay Word bit asserts 46Q1D seconds after 46Q1 asserts if the unbalance condition continues.

Level 2 Neg.-Seq. Time-O/C Pickup (OFF, 2–100%) 46Q2P = 8

Level 2 Neg.-Seq. Time-O/C Time-Dial (1–100 s) 46Q2K = 10

The negative-sequence time-overcurrent element operates with an I_2^2t time characteristic. Set the pickup value equal to the minimum percent of nominal current to which the element must respond. Set the 46Q2K setting equal to the generator rated I_2^2t short time-current capability rating defined by the generator manufacturer.

The 46Q2 Relay Word bit asserts without time delay when the measured negative-sequence current is greater than 46Q2P percent of INOM. The 46Q2T Relay Word bit asserts in a time defined by the time-overcurrent element operating characteristic.

The negative-sequence time-overcurrent element resets using a fixed linear time equal to 240 seconds. The 46Q2R Relay Word bit asserts when the element is fully reset.

46Q Element Torque Control (SELOGIC control equation) 46QTC = 1

The negative-sequence overcurrent elements are disabled when the 46QTC SELOGIC control equation equals logical 0. The elements are allowed to operate when the 46QTC SELOGIC control equation equals logical 1. With the example setting, the elements are always allowed to operate.

Relay Word Bits

Relay Word Bit	Function Description	Typical Applications
46Q1	Level 1 Neg.-Seq. O/C Pickup	Indication, Testing
46Q1T	Level 1 Neg.-Seq. O/C Pickup With Definite-Time Delay	Indication, Event Triggering, SER Triggering
46Q2	Level 2 Neg.-Seq. Time-O/C Pickup	Indication, Event Triggering, SER Triggering, Testing
46Q2T	Level 2 Neg.-Seq. Time-O/C Trip	Tripping, SER Triggering
46Q2R	Level 2 Neg.-Seq. Time-O/C Reset	Testing

Setting Calculation

Information Needed

- Generator continuous current unbalance withstand capability, percent of rated current
- Generator negative-sequence current short-time withstand capability, seconds

Recommendations

Set the 46Q1P equal to or below the generator continuous unbalance current capability.

$$46Q1P = 8 - 12\%$$

Set the 46Q1D time delay greater than the maximum time of normal unbalance current periods, including system phase-fault clearing time. This delay setting will prevent undesired unbalance current alarms.

$$46Q1D = 5.0 \text{ seconds}$$

Set the 46Q2P setting equal to or below the generator continuous unbalance current capability.

$$46Q2P = 8 - 12\%$$

Set the 46Q2K setting equal to or below the generator short-time negative-sequence current capability.

$$46Q2K = 10$$

If there are operating conditions under which you wish to prevent negative-sequence overcurrent element operation, define those conditions in the 46QTC torque-control setting. Normally, the negative-sequence overcurrent elements should be enabled all the time.

$$46QTC = 1$$

Negative-Sequence Overcurrent Tripping

Negative-sequence overcurrent tripping generally is applied to the generator main breaker only. This permits rapid resynchronization after the system unbalance condition is cleared. Refer to ***Section 4: SELOGIC Control Equations*** for more detail and examples of tripping SELOGIC control equations.

Element Operating Characteristics

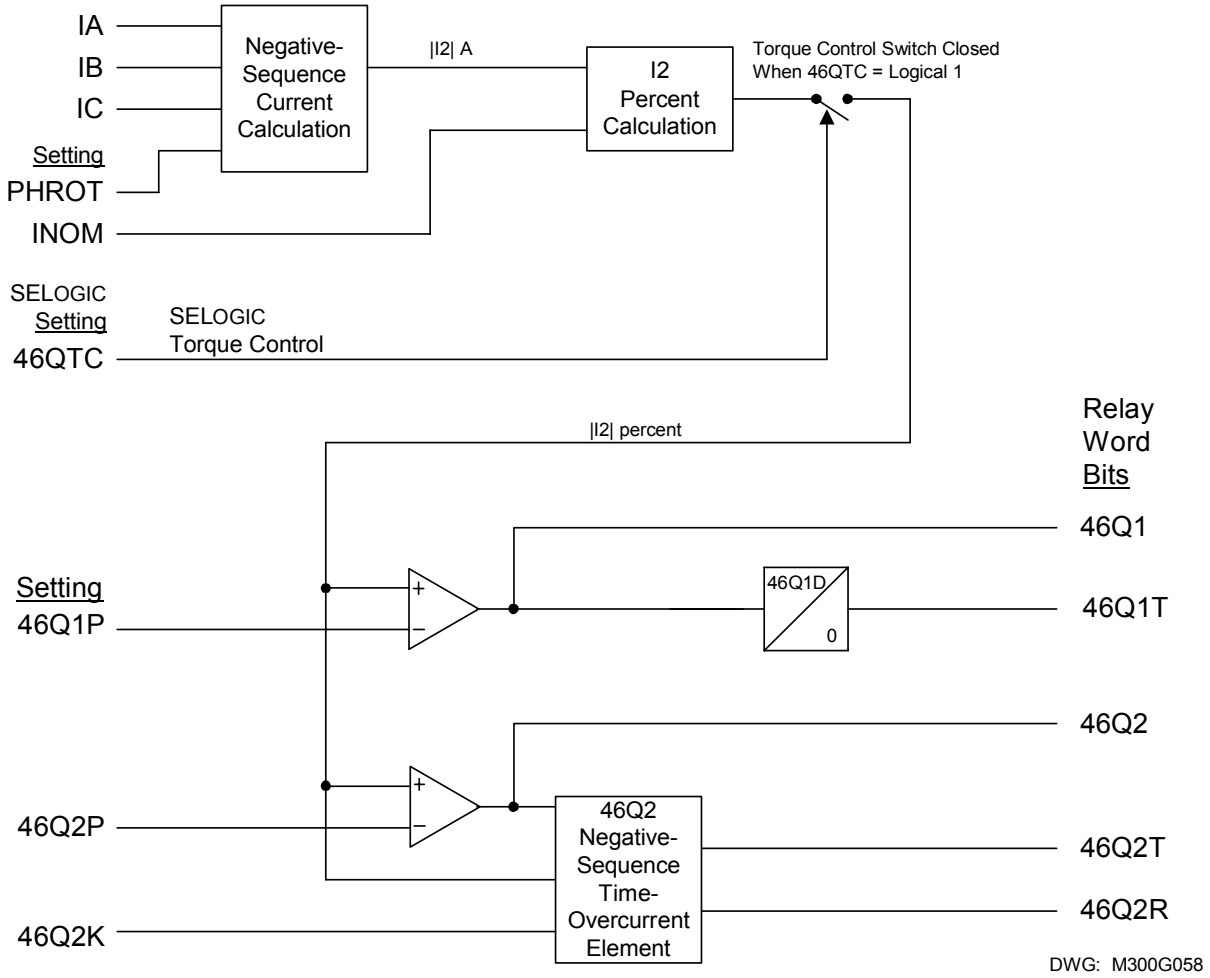

Figure 2.22: Negative-Sequence Overcurrent Element Logic Diagram

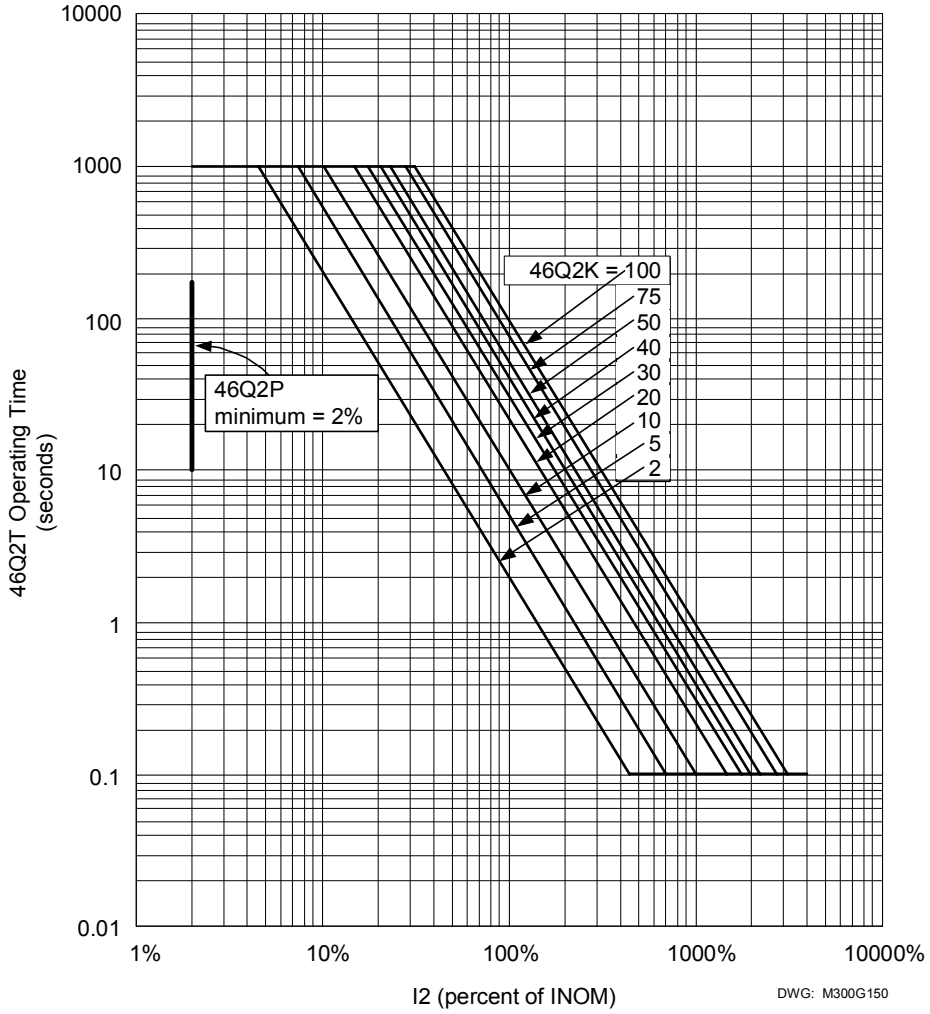

$$t_{op} = \frac{46Q2K}{\left(\frac{I2}{INOM}\right)^2} \text{ seconds}$$

Figure 2.23: Negative-Sequence Time-Overcurrent Operating Characteristic

OVERCURRENT ELEMENTS

Element Description

Functional Description

The SEL-300G offers an assortment of nondedicated overcurrent elements for protection, indication, and control functions.

Overcurrent Protection, All Relay Models

All relay models provide the following overcurrent elements:

- Two levels of phase definite-time overcurrent, 50P1 and 50P2
- Two levels of neutral definite-time overcurrent, 50N1 and 50N2
- Two levels of residual ground definite-time overcurrent, 50G1 and 50G2
- One level of neutral inverse-time overcurrent, 51N
- One level of residual inverse-time overcurrent, 51G

Phase overcurrent elements operate using the maximum of the measured phase current magnitudes. The neutral overcurrent elements operate using the magnitude of the neutral current input. Residual ground overcurrent elements operate using the sum of the three-phase current inputs.

Where you use the relay to protect high-impedance grounded or resistance grounded generators, the neutral overcurrent elements provide stator ground fault detection for faults in the upper area of the winding when connected to a generator neutral current transformer, as shown in ***Section 5: Installation***. The 50P, 50N, and 50G elements may be set sensitively and applied for inadvertent energization protection, as described in ***Section 4: SELOGIC Control Equations***.

Where you use the relay to protect solidly grounded generators, the phase, neutral, and residual overcurrent elements can all respond to stator ground faults in the mid- and upper-winding areas.

Overcurrent Protection, Relay Models With Differential Protection

Relay models with differential protection functions add the following overcurrent elements:

- Two levels of phase definite-time overcurrent, 50H1 and 50H2
- Two levels of negative-sequence definite-time overcurrent, 50Q1 and 50Q2
- Two levels of residual ground definite-time overcurrent, 50R1 and 50R2

The 50H1 phase overcurrent element operates using the maximum of the measured phase current inputs from the IA87, IB87, and IC87 phase current inputs. The 50Q1 and 50Q2 elements operate using the magnitude of the negative-sequence current, I_2, calculated from the IA87, IB87, and IC87 phase current inputs. The 50R1 and 50R2 residual ground overcurrent elements operate using the magnitude of the sum of the IA87, IB87, and IC87 phase current inputs. In applications where the generator is connected directly to a bus, you can use the 50H and 50R elements to provide effective breaker failure protection, as described in ***Section 4: SELOGIC Control Equations***.

The 50H2 phase overcurrent element is three single-phase overcurrent elements with individual pickup settings per phase. When the I_87 inputs are applied with window CTs for self-balancing differential protection (see Figure 5.21), you can set the phase overcurrent element pickups differently. This may be necessary to accommodate different levels of winding current unbalance among the phases.

Setting Descriptions

Enable O/C Protection (Y, N) E50 = Y

Set E50 = Y to enable the 50P1, 50P2, 50N1, 50N2, 50G1, and 50G2 definite-time overcurrent elements. If none of these overcurrent elements is required, set E50 = N. When

E50 = N, the elements listed above are inactive and their pickup and time-delay settings are hidden and do not need to be entered.

Enable 87-Input O/C Protection (Y, N) E50_87 = Y

Note: This setting is not offered if the relay model is not equipped with current differential protection functions.

Set E50_87 = Y to enable the 50H1, 50H2, 50Q1, 50Q2, 50R1, and 50R2 definite-time overcurrent elements. If none of these overcurrent elements is required, set E50_87 = N. When E50_87 = N, the elements listed above are inactive and their pickup and time-delay settings are hidden and do not need to be entered.

Enable Time-O/C Elements (Y, N) E51 = Y

Set E51 = Y to enable the 51N and 51G inverse-time overcurrent elements. If none of these overcurrent elements is required, set E51 = N. When E51 = N, the elements listed above are inactive and their settings are hidden and do not need to be entered. Voltage-controlled and voltage-restrained time-overcurrent elements are enabled separately.

Note: All setting ranges shown below are for 5 A relay models. Relays equipped for use with 1 A current transformers provide overcurrent element setting ranges of 0.05 to 20 A secondary.

Definite-Time Overcurrent Settings

Level 1 Phase O/C Pickup (OFF, 0.25–100.00 A)	50P1P = 8.00
Level 1 Phase O/C Time Delay (0.00–400.00 s)	50P1D = 30.00
Level 2 Phase O/C Pickup (OFF, 0.25–100.00 A)	50P2P = 8.00
Level 2 Phase O/C Time Delay (0.00–400.00 s)	50P2D = 30.00
Level 1 Neutral Ground O/C Pickup (OFF, 0.25–100.00 A)	50N1P = 2.50
Level 1 Neutral Ground O/C Time Delay (0.00–400.00 s)	50N1D = 0.10
Level 2 Neutral Ground O/C Pickup (OFF, 0.25–100.00 A)	50N2P = 8.00
Level 2 Neutral Ground O/C Time Delay (0.00–400.00 s)	50N2D = 30.00
Level 1 Residual Ground O/C Pickup (OFF, 0.25–100.00 A)	50G1P = 8.00
Level 1 Residual Ground O/C Time Delay (0.00–400.00 s)	50G1D = 30.00
Level 2 Residual Ground O/C Pickup (OFF, 0.25–100.00 A)	50G2P = 8.00
Level 2 Residual Ground O/C Time Delay (0.00–400.00 s)	50G2D = 30.00

Definite-Time 50/87 Overcurrent Settings

Level 1 Phase O/C Pickup (OFF, 0.25–100.00 A)	50H1P = 8.00
Level 1 Phase O/C Time Delay (0.00–400.00 s)	50H1D = 30.00
Level 2 Phase-A O/C Pickup (OFF, 0.25–100.00 A)	50H2PA = 8.00
Level 2 Phase-B O/C Pickup (OFF, 0.25–100.00 A)	50H2PB = 8.00
Level 2 Phase-C O/C Pickup (OFF, 0.25–100.00 A)	50H2PC = 8.00
Level 2 Phase O/C Time Delay (0.00–400.00 s)	50H2D = 30.00
Level 1 Negative-Sequence O/C Pickup (OFF, 0.25–100.00 A)	50Q1P = 8.00
Level 1 Negative-Sequence O/C Time Delay (0.00–400.00 s)	50Q1D = 30.00

Level 2 Negative-Sequence O/C Pickup (OFF, 0.25–100.00 A)	50Q2P = 8.00
Level 2 Negative-Sequence O/C Time Delay (0.00–400.00 s)	50Q2D = 30.00
Level 1 Residual Ground O/C Pickup (OFF, 0.25–100.00 A)	50R1P = 8.00
Level 1 Residual Ground O/C Time Delay (0.00–400.00 s)	50R1D = 30.00
Level 2 Residual Ground O/C Pickup (OFF, 0.25–100.00 A)	50R2P = 8.00
Level 2 Residual Ground O/C Time Delay (0.00–400.00 s)	50R2D = 30.00

Some, none, or all of the available definite-time overcurrent elements may be applied for various protection, indication, and control functions, as required by your application. Relay Word bits for these elements are summarized below.

Note: Overcurrent pickup setting ranges shown below are for 5 A relay models. Relays equipped for use with 1 A current transformers provide overcurrent element setting ranges of 0.1 to 3.2 A secondary.

Neutral Time-Overcurrent Settings

Neutral Time-O/C Pickup (OFF, 0.5–16.0 A)	51NP = 1.0
Neutral Time-O/C Curve (U1–U5, C1–C5)	51NC = U2
Neutral Time-O/C Time-Dial (0.50–15.00, U curves) (0.05–1.00, C curves)	51NTD = 3.00
Neutral Time-O/C EM Reset (Y, N)	51NRS = Y
51N Torque-Control Setting	51NTC = 1

Residual Time-Overcurrent Settings

Residual Time-O/C Pickup (OFF, 0.5–16.0 A)	51GP = 8.0
Residual Time-O/C Curve (U1–U5, C1–C5)	51GC = U2
Residual Time-O/C Time-Dial (0.50–15.00, U curves) (0.05–1.00, C curves)	51GTD = 3.00
Residual Time-O/C EM Reset (Y, N)	51GRS = Y
51G Torque-Control Setting	51GTC = 1

The SEL-300G provides inverse-time overcurrent elements for neutral and residual current. Each of the elements includes a settable pickup, curve shape, and time-dial. Ten curve shapes are available. Curves U1–U5 emulate the popular North American induction disk relays. Curves C1–C5 emulate popular European analog time-overcurrent relay operation. Operating characteristics of the available curves are shown in Figure 2.30 to Figure 2.39.

When you select Y to enable electromechanical reset emulation, the relay provides a slow reset that is dependent on the amount of current measured, similar to an induction disk relay reset. When you select N, the relay fully resets the time-overcurrent element one cycle after current drops below the pickup setting, similar to analog and many microprocessor-based time-overcurrent relays. Select Y or N to match the operating characteristic of other time-overcurrent protection protecting this generator.

Each of the inverse-time overcurrent elements is also equipped with a torque-control setting. When the equation result is logical 1, the element is permitted to operate. When the result is logical 0, the element is not permitted to operate. Use other protection elements, logic conditions, or control inputs to supervise these elements if desired.

Relay Word Bits

Relay Word Bit	Function Description	Typical Applications
50P1	Level 1 Phase O/C Pickup	Indication, Control
50P1T	Level 1 Phase O/C With Definite-Time Delay	Indication, Control, Event Triggering, SER Triggering
50P2	Level 2 Phase O/C Pickup	Indication, Control
50P2T	Level 2 Phase O/C With Definite-Time Delay	Indication, Control, Event Triggering, SER Triggering
50N1	Level 1 Neutral O/C Pickup	Indication, Control
50N1T	Level 1 Neutral With O/C Definite-Time Delay	Indication, Control, Event Triggering, SER Triggering
50N2	Level 2 Neutral O/C Pickup	Indication, Control
50N2T	Level 2 Neutral O/C With Definite-Time Delay	Indication, Control, Event Triggering, SER Triggering
50G1	Level 1 Residual O/C Pickup	Indication, Control
50G1T	Level 1 Residual O/C With Definite-Time Delay	Indication, Control, Event Triggering, SER Triggering
50G2	Level 2 Residual O/C Pickup	Indication, Control
50G2T	Level 2 Residual O/C With Definite-Time Delay	Indication, Control, Event Triggering, SER Triggering
50H1	87 Input Level 1 Phase O/C Pickup	Indication, Control
50H1T	87 Input Level 1 Phase O/C With Definite-Time Delay	Tripping, Control, SER Triggering
50H2A	IA87 Input Level 2 Instantaneous O/C Pickup	Indication, Control
50H2B	IB87 Input Level 2 Instantaneous O/C Pickup	Indication, Control
50H2C	IC87 Input Level 2 Instantaneous O/C Pickup	Indication, Control
50H2	50H2 = 50H2A + 50H2B + 50H2C	Indication, Control
50H2T	50H2 With Definite-Time Delay	Tripping, Control, SER Triggering
50Q1	87 Input Level 1 Neg.-Seq. O/C	Indication, Control
50Q1T	87 Input Level 1 Neg.-Seq. O/C With Definite-Time Delay	Tripping, Control, SER Triggering
50Q2	87 Input Level 2 Neg.-Seq. O/C	Indication, Control
50Q2T	87 Input Level 2 Neg.-Seq. O/C With Definite-Time Delay	Tripping, Control, SER Triggering
50R1	87 Input Level 1 Residual O/C	Indication, Control
50R1T	87 Input Level 1 Residual O/C With Definite-Time Delay	Tripping, Control, SER Triggering
50R2	87 Input Level 2 Residual O/C	Indication, Control
50R2T	87 Input Level 2 Residual O/C With Definite-Time Delay	Tripping, Control, SER Triggering
51N	Neutral Time-Overcurrent Pickup	Indication, Event Triggering, SER Triggering, Testing

Relay Word Bit	Function Description	Typical Applications
51NT	Neutral Time-Overcurrent Trip	Tripping, SER Triggering
51NR	Neutral Time-Overcurrent Reset	Testing
51G	Residual Time-Overcurrent Pickup	Indication, Event Triggering, SER Triggering, Testing
51GT	Residual Time-Overcurrent trip	Tripping, SER Triggering
51GR	Residual Time-Overcurrent reset	Testing

Neutral Overcurrent Setting Calculation

Information Needed

- Generator terminal ground fault current, In, A primary
- Generator grounding transformer ratio to 1 (in high-impedance grounded protection applications)
- Neutral CT transformer ratio to 1

Recommendations

In all applications where a neutral current transformer is connected between the generator neutral point and ground or in the secondary of the generator grounding transformer, you can apply the neutral overcurrent elements 51N and 50N1 for stator ground fault detection.

Warning: Generator neutral overcurrent protection cannot detect stator winding faults at or near the generator neutral point, nor is it effective while the generator grounding circuit is opened. In resistance and high-impedance grounded generator applications, use this relay's 100 percent stator ground protection to ensure that all stator winding faults are detected.

Set the 51NP equal to or just greater than the element minimum pickup setting.

51NP = 0.5 A

An inverse curve shape (U2) and time-dial of 3.0 provide 6.5 second tripping for 1.0 A secondary faults.

51NC = U2

51NTD = 3.0

Electromechanical reset emulation is not necessary and this element may be in service continuously so the torque-control setting is logical 1.

51RS = N

51NTC = 1

You can determine the lower boundary of stator winding coverage provided by this element using the equation:

$$x\% = \left[\frac{(2 \bullet 51NP)}{\left(In \bullet \frac{N}{CTRN} \right)} \right] \bullet 100\%$$

where

In	= generator ground fault current, A primary
N	= grounding transformer voltage ratio to 1, (use 1 in solidly grounded or resistance grounded applications)
CTRN	= neutral current transformer ratio to 1

Ground faults occurring above the winding point calculated above are detected and a trip generated by the 51N time-overcurrent element in under 6.5 seconds, using the settings above.

The 50N1P element can provide a definite-time delayed trip for ground faults occurring higher in the stator winding, between the generator and the step-up transformer, or within the step-up transformer delta windings. A 50N1P setting of four to five times the 51NP setting will reduce the 50N1P element sensitivity to system ground faults, while still providing detection of ground faults high in the stator winding.

$$50N1P = 4 \text{ to } 5 \text{ times } 51NP$$

$$50N1D = 1.10 \text{ to } 0.5 \text{ second, depending on system ground fault clearing time}$$

Set the 50N1D delay time greater than the maximum clearing time for system ground faults that can be detected by the 50N1P element.

Neutral Overcurrent Tripping

Because the neutral overcurrent elements detect generator faults of a serious nature, tripping generally is applied to the generator main breaker, the field breaker, and the prime mover. Refer to ***Section 4: SELOGIC Control Equations*** for more detail and examples of tripping SELOGIC control equations.

Other Overcurrent Elements

Enable and apply those phase, neutral, and residual overcurrent elements that are required for your specific control scheme. Pickup settings and time delays are governed by the requirements of the application. Set the pickup of unused elements to OFF.

Element Operating Characteristics

Pickup and Reset Time Curves

Figure 2.24 and Figure 2.25 show pickup and reset time curves applicable to all instantaneous overcurrent elements in the SEL-300G Relay. These times do **not** include output contact operating time and are accurate for determining element operation time for use in internal SELOGIC control equations. Output contact pickup/dropout time is less than 5 ms.

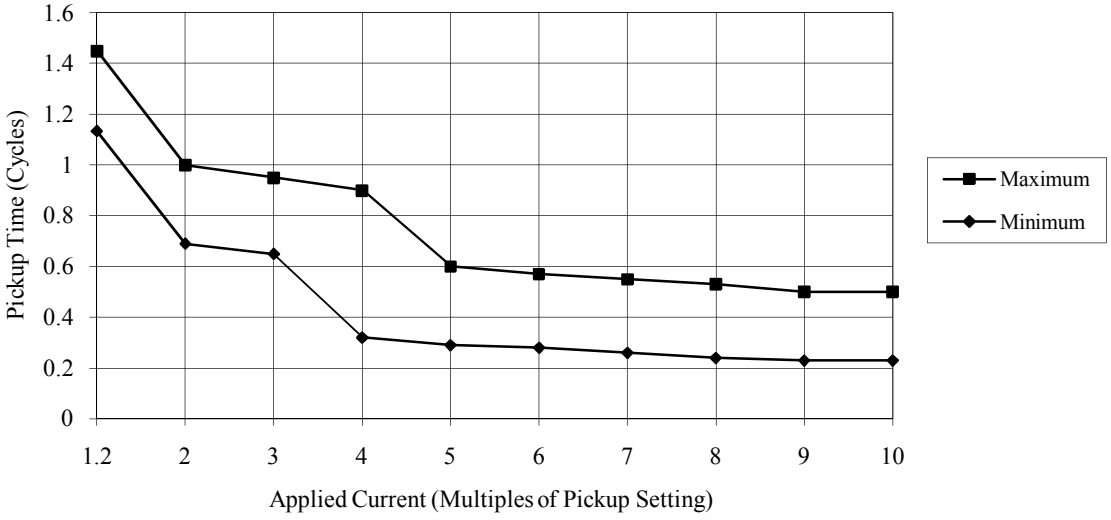

Figure 2.24: Instantaneous Overcurrent Element Pickup Time Curve

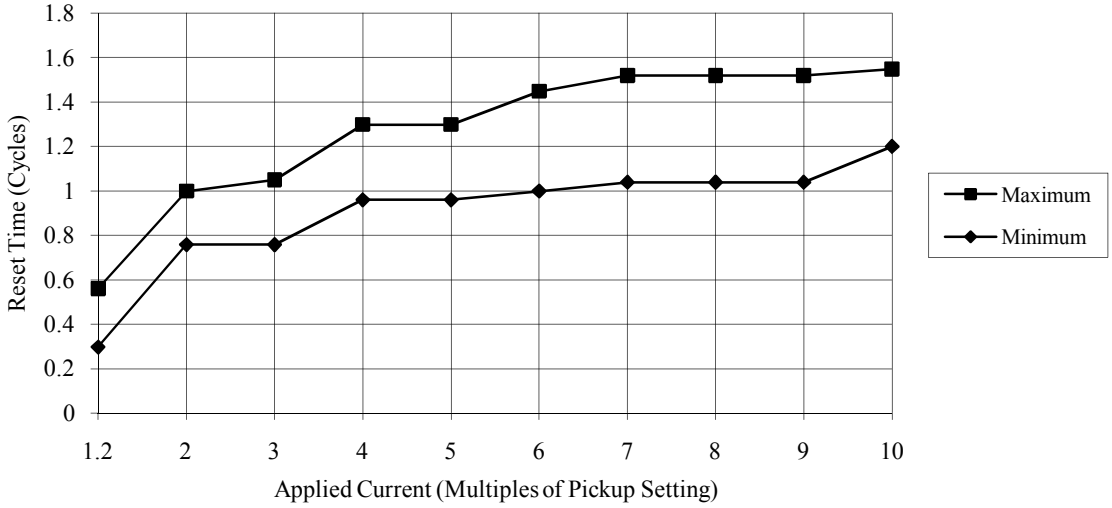

Figure 2.25: Instantaneous Overcurrent Element Reset Time Curve

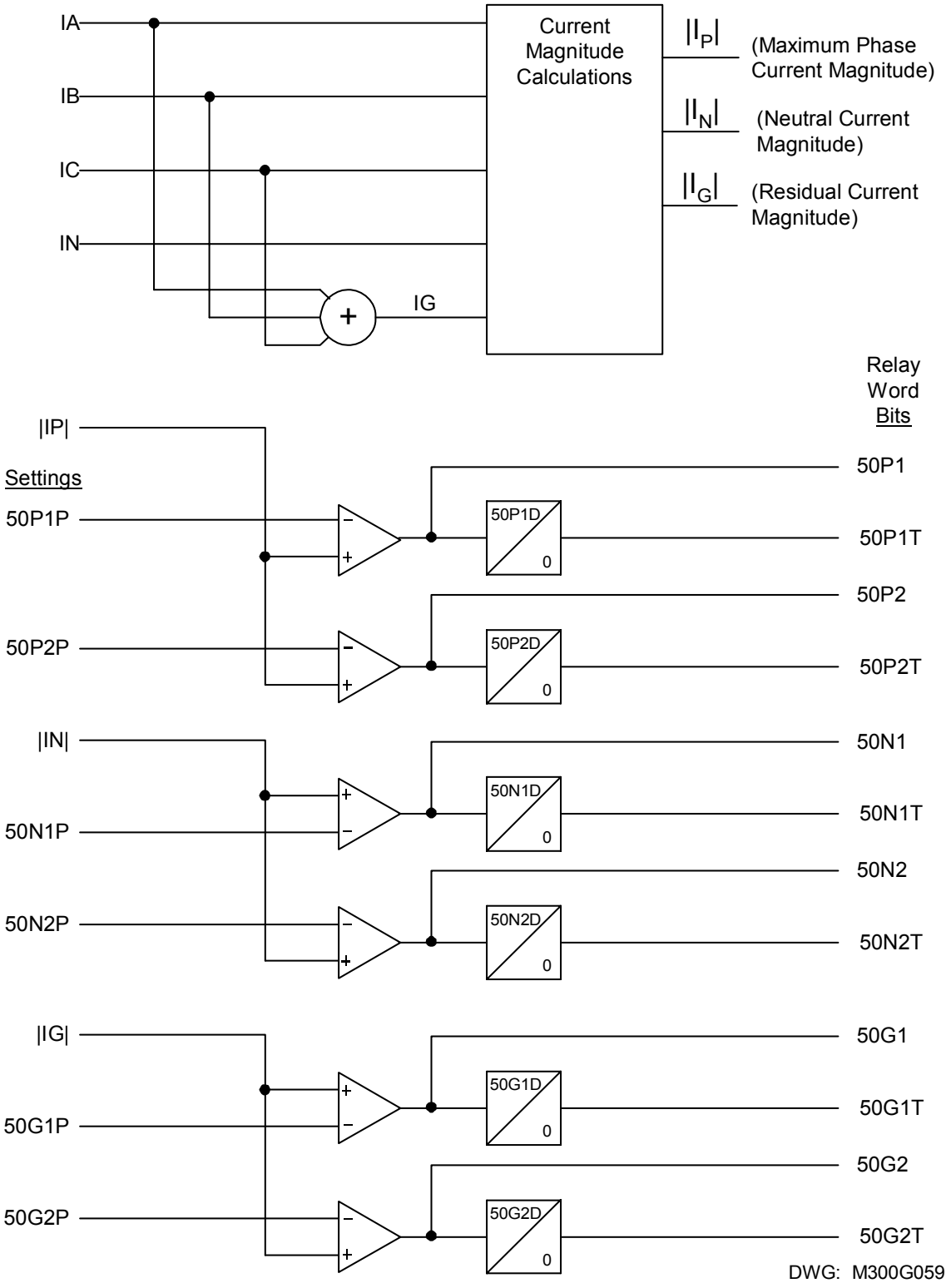

Figure 2.26: Definite-Time Overcurrent Element Logic Diagram

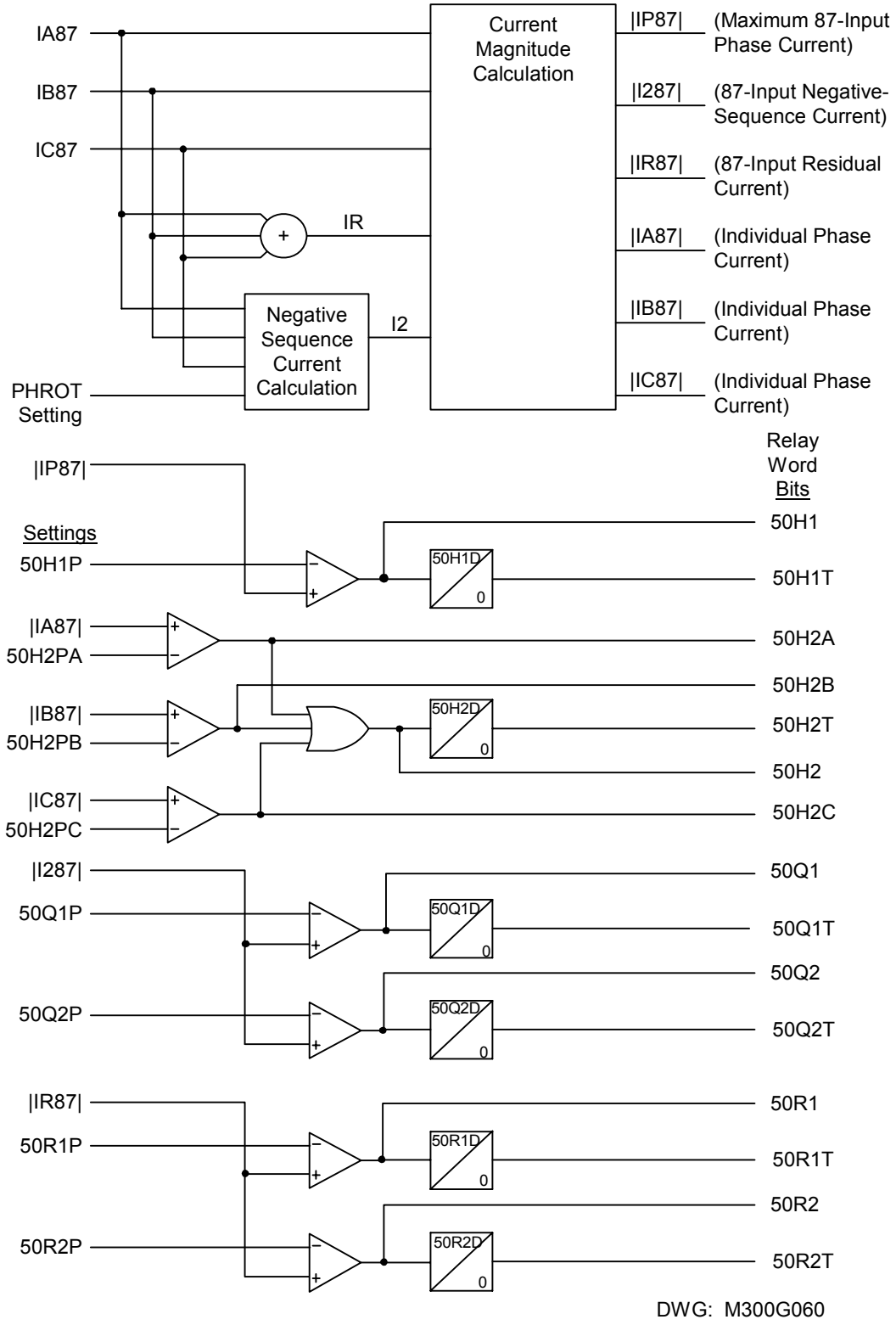

Figure 2.27: 87-Input Definite-Time Overcurrent Element Logic Diagram

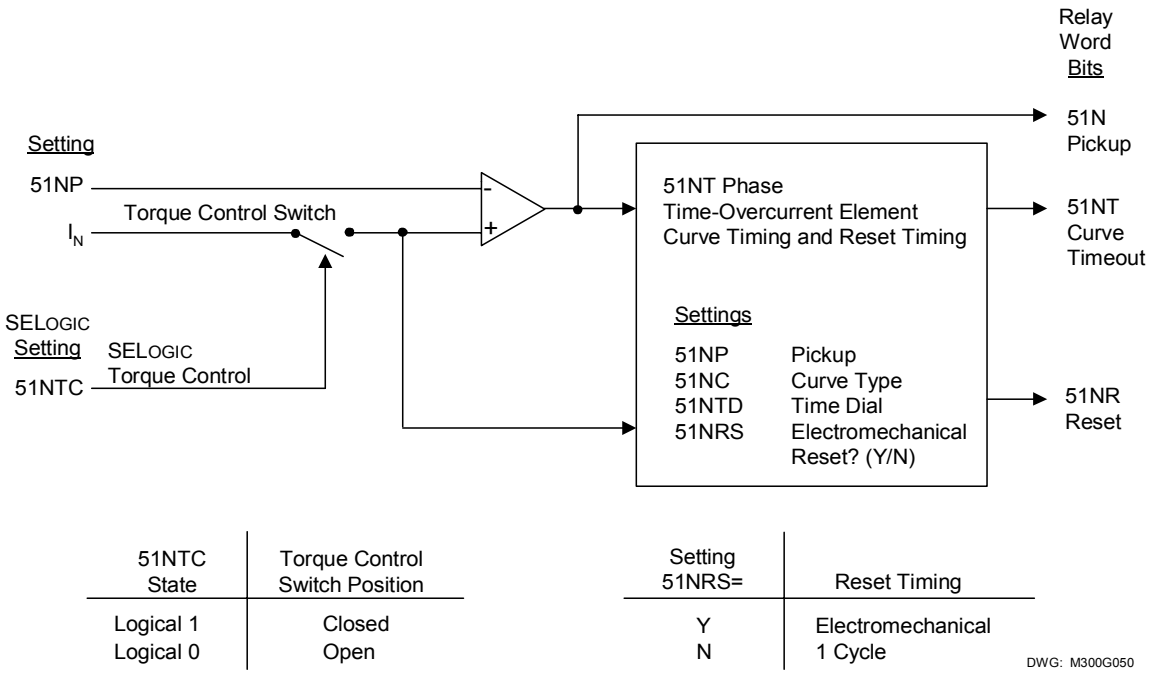

Figure 2.28: Neutral Ground Time-Overcurrent Element 51NT

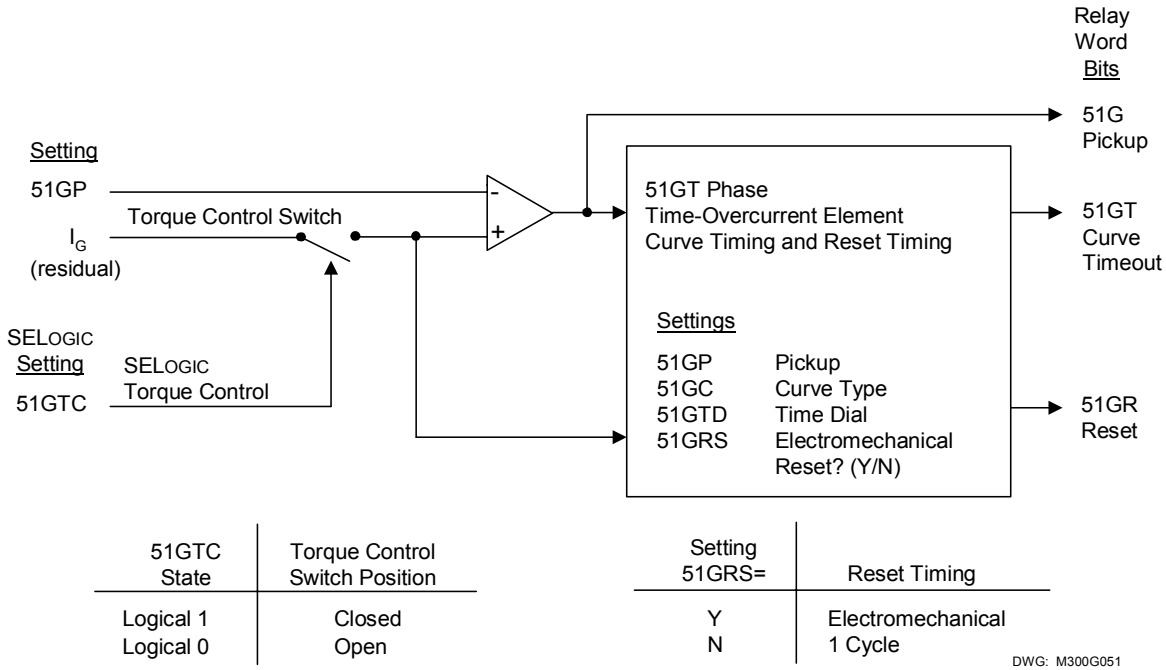

Figure 2.29: Residual Ground Time-Overcurrent Element 51GT

Time-Overcurrent Curves

The following information describes the curve timing for the curve and time-dial settings made for the time-overcurrent elements. The time-overcurrent relay curves in Figure 2.30 through Figure 2.34 conform to *IEEE C37.11-1996 IEEE Standard Inverse-Time Characteristic Equations for Overcurrent Relays*.

tp = operating time in seconds
tr = electromechanical induction-disk emulation reset time in seconds (if electromechanical reset setting is made)
TD = time-dial setting
M = applied multiples of pickup current [for operating time (tp), M>1; for reset time (tr), M≤1].

U.S. Moderately Inverse Curve: U1

$$tp = TD \bullet \left(0.0226 + \frac{0.0104}{\left(M^{0.02} - 1\right)}\right)$$

$$tr = TD \bullet \left(\frac{1.08}{\left(1 - M^2\right)}\right)$$

U.S. Inverse Curve: U2

$$tp = TD \bullet \left(0.180 + \frac{5.95}{\left(M^2 - 1\right)}\right)$$

$$tr = TD \bullet \left(\frac{5.95}{\left(1 - M^2\right)}\right)$$

U.S. Very Inverse Curve: U3

$$tp = TD \bullet \left(0.0963 + \frac{3.88}{\left(M^2 - 1\right)}\right)$$

$$tr = TD \bullet \left(\frac{3.88}{\left(1 - M^2\right)}\right)$$

U.S. Extremely Inverse Curve: U4

$$tp = TD \bullet \left(0.0352 + \frac{5.67}{\left(M^2 - 1\right)}\right)$$

$$tr = TD \bullet \left(\frac{5.67}{\left(1 - M^2\right)}\right)$$

U.S. Short-Time Inverse Curve: U5

$$tp = TD \bullet \left(0.00262 + \frac{0.00342}{\left(M^{0.02} - 1\right)}\right)$$

$$tr = TD \bullet \left(\frac{0.323}{\left(1 - M^2\right)}\right)$$

I.E.C. Class A Curve (Standard Inverse): C1

$$tp = TD \bullet \left(\frac{0.14}{\left(M^{0.02} - 1\right)}\right)$$

$$tr = TD \bullet \left(\frac{13.5}{\left(1 - M^2\right)}\right)$$

I.E.C. Class B Curve (Very Inverse): C2

$$tp = TD \bullet \left(\frac{13.5}{\left(M - 1\right)}\right)$$

$$tr = TD \bullet \left(\frac{47.3}{\left(1 - M^2\right)}\right)$$

I.E.C. Class C Curve (Extremely Inverse): C3

$$tp = TD \bullet \left(\frac{80.0}{\left(M^2 - 1\right)}\right)$$

$$tr = TD \bullet \left(\frac{80.0}{\left(1 - M^2\right)}\right)$$

I.E.C. Long-Time Inverse Curve: C4

$$tp = TD \bullet \left(\frac{120.0}{\left(M - 1\right)}\right)$$

$$tr = TD \bullet \left(\frac{120.0}{\left(1 - M\right)}\right)$$

I.E.C. Short-Time Inverse Curve: C5

$$tp = TD \bullet \left(\frac{0.05}{\left(M^{0.04} - 1\right)}\right)$$

$$tr = TD \bullet \left(\frac{4.85}{\left(1 - M^2\right)}\right)$$

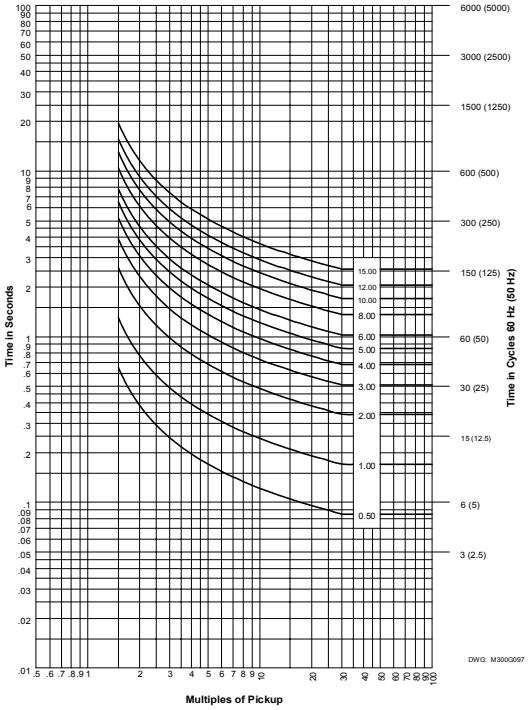

Figure 2.30: U.S. Moderately Inverse Curve: U1

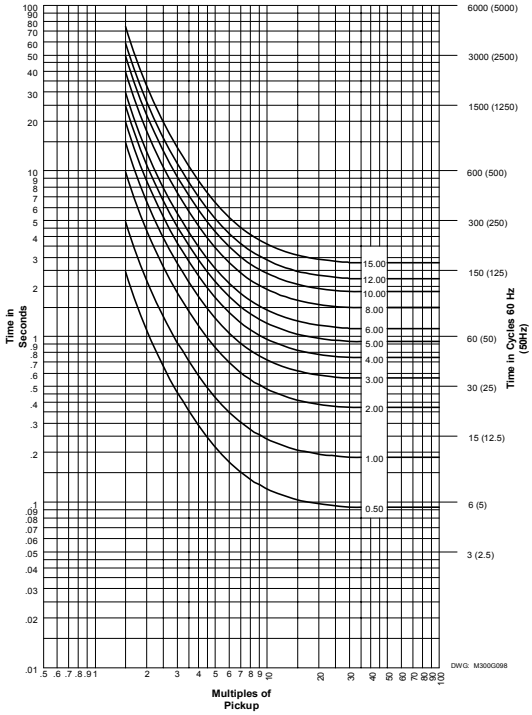

Figure 2.31: U.S. Inverse Curve: U2

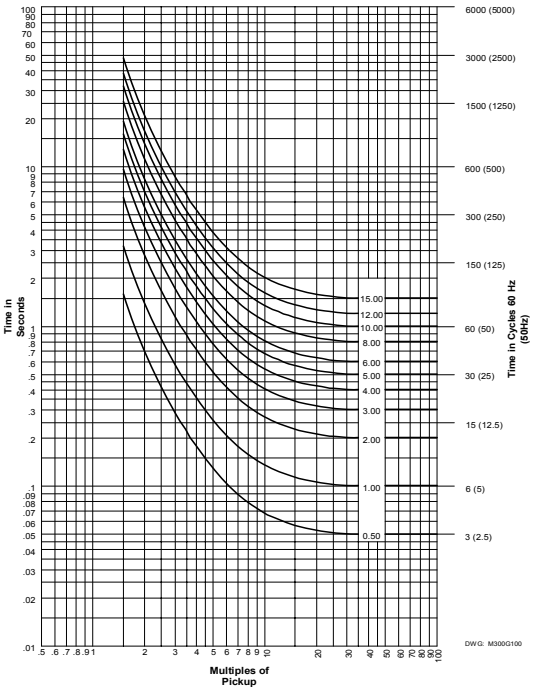

Figure 2.32: U.S. Very Inverse Curve: U3

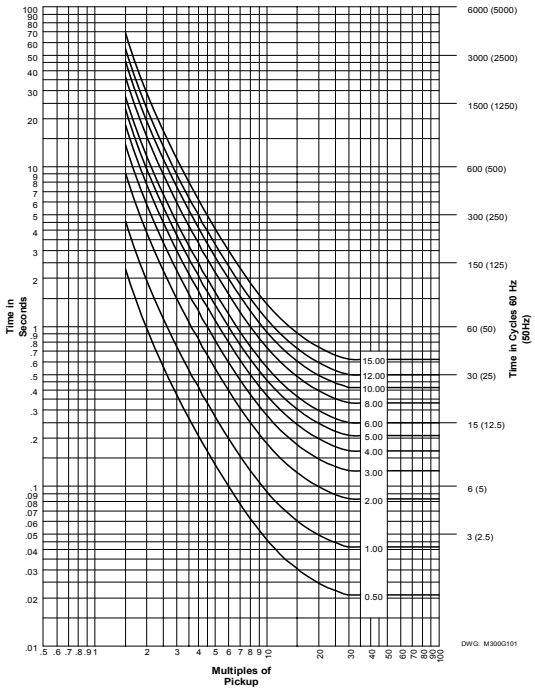

Figure 2.33: U.S. Extremely Inverse Curve: U4

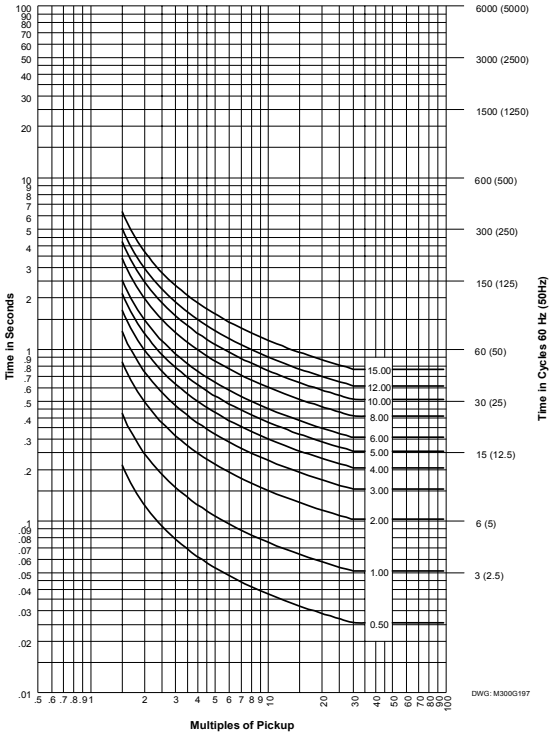

Figure 2.34: U.S. Short-Time Inverse Curve: U5

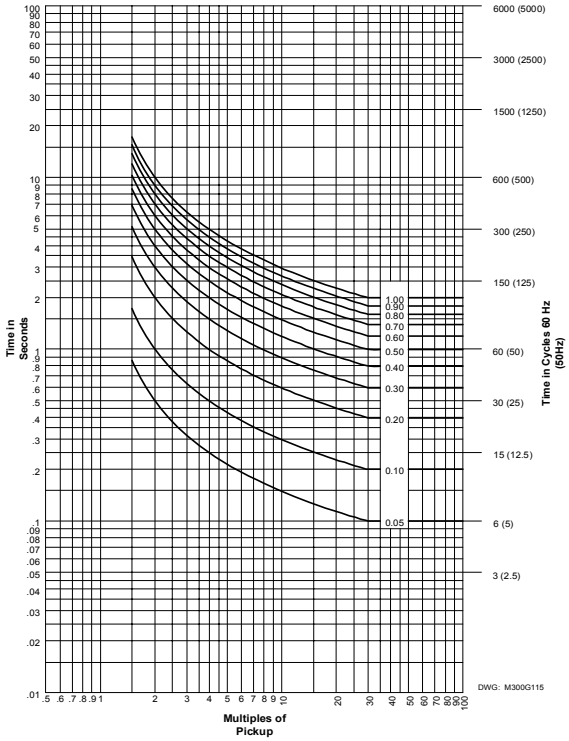

Figure 2.35: I.E.C. Class A Curve (Standard Inverse): C1

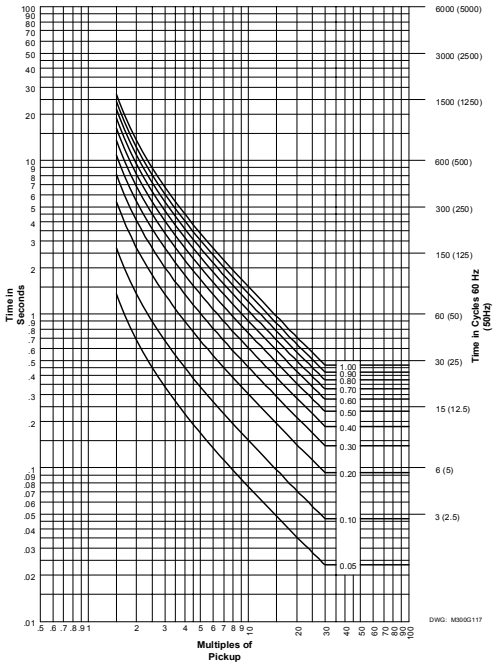

Figure 2.36: I.E.C. Class B Curve (Very Inverse): C2

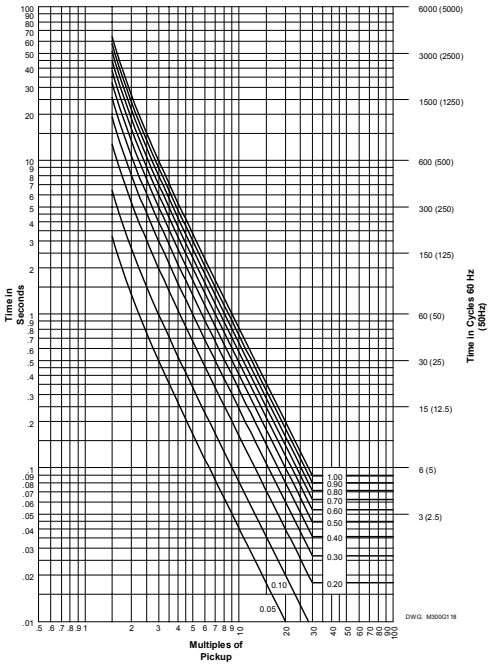

Figure 2.37: I.E.C. Class C Curve (Extremely Inverse): C3

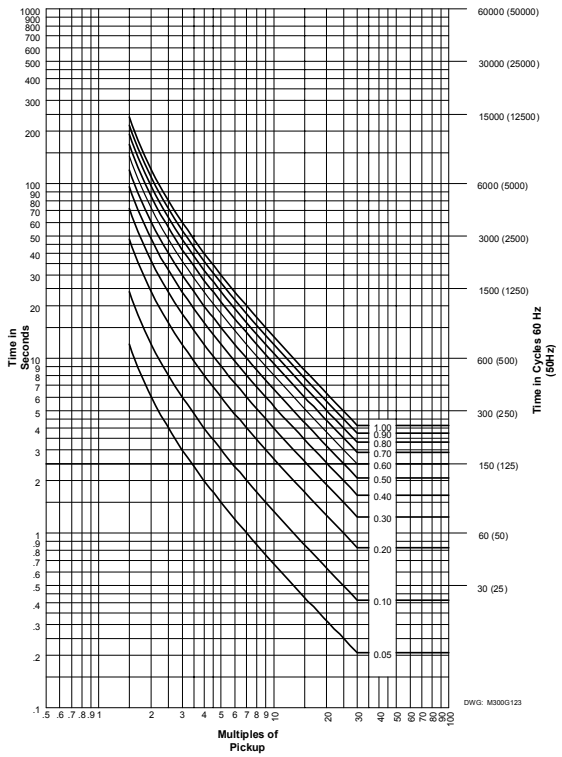

Figure 2.38: I.E.C. Long-Time Inverse Curve: C4

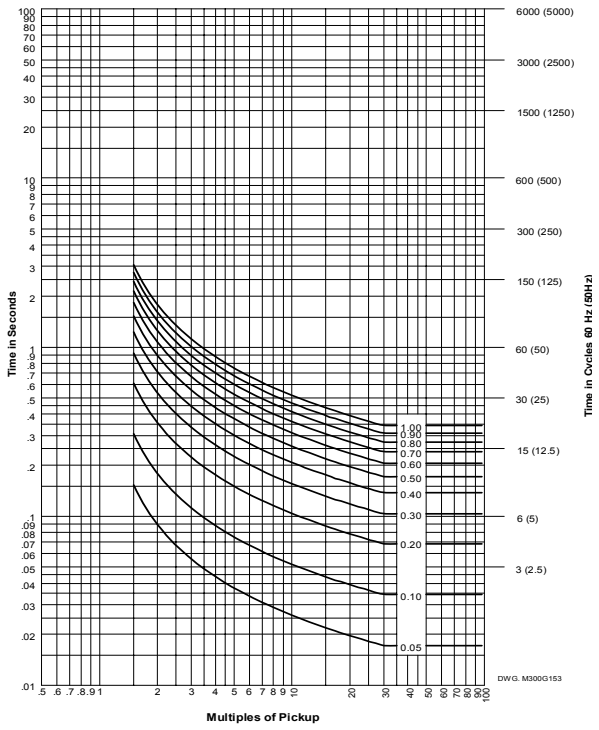

Figure 2.39: I.E.C. Short-Time Inverse Curve: C5

VOLTAGE-CONTROLLED/RESTRAINED TIME-OVERCURRENT ELEMENTS

Element Description

Functional Description

The SEL-300G provides a voltage-restrained phase time-overcurrent element and a voltage-controlled phase time-overcurrent element. One of these elements typically is used for system phase fault backup protection to trip the generator in the event of an uncleared phase fault on the system side of the step-up transformer.

The voltage-controlled phase time-overcurrent element, 51C, operates when its torque-control setting, 51CTC, is equal to logical 1. Typically, the torque-control setting should include the Relay Word bit for an undervoltage element, such as 27PP1. This way, the 51C element operates only when a phase-to-phase voltage is less than the 27PP1 setting. This element works properly regardless of whether a step-up transformer is present or not and regardless of the step-up transformer connection—delta/wye, wye/wye, etc.

The voltage-restrained phase time-overcurrent element, 51V, also includes a torque-control setting, 51VTC. However, the 51V element operation is fundamentally different in that the element pickup setting automatically is reduced as the generator phase-phase voltage decreases during a fault. When the generator voltage is 100 percent of the VNOM setting, the 51V element operates based on 100 percent of its pickup setting, 51VP. As the generator phase-phase voltage drops, the relay decreases the element pickup by a like amount, down to 12.5 percent of nominal phase-phase voltage. For voltages below 12.5 percent, the relay uses a pickup 12.5 percent of the

51VP setting. The element automatically determines fault type and appropriate phase-phase restrain voltage based on the compensation angle setting 51VCA. This element operates for phase-phase and three-phase faults. Use other elements (e.g., neutral/residual overcurrent 50N, 51N, 50G, 51G) for the ground overcurrent protection.

When a step-up transformer is present, the generator phase-phase voltage is compensated for the phase shift across the transformer. There is no compensation for the voltage drop across the step-up transformer.

Setting Descriptions

Enable System Backup Protection (N, D, DC, V, C) EBUP = C

Set EBUP = C to enable the 51C voltage-controlled phase inverse-time overcurrent element. Set EBUP = V to enable the 51V voltage-restrained inverse-time overcurrent element. When EBUP = D, DC, or N, the elements listed above are disabled and the following settings do not need to be entered. (See Distance Elements for the EBUP = D and DC setting description.)

When EBUP = C:

Voltage-Controlled Time-O/C Pickup
(OFF, 0.50–16.00 A {5 A Model}; OFF, 0.10–3.20 A {1 A Model}) 51CP = 3.00

Voltage-Controlled Time-O/C Curve (U1–U5, C1–C5) 51CC = U2

Voltage-Controlled Time-O/C Time-Dial (0.50–15.00, U curves) 51CTD = 3.00
(0.05–1.00, C curves)

Voltage-Controlled Time-O/C EM Reset (Y, N) 51CRS = Y

51C Torque-Control Setting (SELOGIC control equation) 51CTC = 27PP1*!60LOP

When EBUP = V:

Compensation Angle (0, -30, +30 deg) 51VCA = 0

Use the 51VCA setting to compensate the voltage restrained overcurrent element for the presence of a delta-wye generator step-up transformer between the generator and system. When the element is not set to reach through the step-up transformer, set 51VCA = 0. When the element is set to respond to phase faults on the high side of a delta-wye transformer, and the system phase-to-neutral voltage phase angle leads the generator phase-to-neutral voltage phase angle by 30°, set 51VCA = –30°. When the system phase-to-neutral voltage phase angle lags the generator phase-to-neutral voltage phase angle by 30°, set 51VCA = +30°.

Voltage-Restrained Time-O/C Pickup
(OFF, 2.00–16.00 A {5 A Model}; OFF, 0.40–3.20 A {1 A Model}) 51VP = 8.00

Voltage-Restrained Time-O/C Curve (U1–U5, C1–C5) 51VC = U2

Voltage-Restrained Time-O/C Time-Dial (0.50–15.00, U curves) 51VTD = 3.00
(0.05–1.00, C curves)

Voltage-Restrained Time-O/C EM Reset (Y, N) 51VRS = Y

51V Torque-Control Setting (SELOGIC control equation) 51VTC = !60LOP

For system backup protection, the SEL-300G provides a choice of voltage-controlled or voltage-restrained phase inverse-time overcurrent elements or phase distance elements (discussed earlier in this section). The overcurrent elements include a settable pickup, curve shape, and time-dial. Ten curve shapes are available. Curves U1–U5 emulate the popular North American induction disk relays. Curves C1–C5 emulate popular European analog

time-overcurrent relays. Operating characteristics of the available curves are shown in Figure 2.30 to Figure 2.39.

When you set 51*n*RS = Y to enable electromechanical reset emulation, the relay provides a slow reset that is dependent on the amount of current measured, similar to an induction disk relay reset. When you select N, the relay fully resets the time-overcurrent element one cycle after current drops below the pickup setting, similar to analog and many microprocessor-based time-overcurrent relays. Select Y or N to match the operating characteristic of other time-overcurrent protection protecting the system near this generator.

Each of the elements is also equipped with a torque-control setting. When the equation result is logical 1, the element is permitted to operate. When the result is logical 0, the element is not permitted to operate. Use other protection elements, logic conditions, or control inputs to supervise these elements if desired.

Relay Word Bits

Relay Word Bit	Function Description	Typical Applications
51C	Voltage-Controlled Time-O/C Pickup	Indication, Event Triggering, SER Triggering, Testing
51CT	Voltage-Controlled Time-O/C Trip	Tripping, SER Triggering
51CR	Voltage-Controlled Time-O/C Reset	Testing
51V	Voltage-Restrained Time-O/C Pickup	Indication, Event Triggering, SER Triggering, Testing
51VT	Voltage-Restrained Time-O/C Trip	Tripping, SER Triggering
51VR	Voltage-Restrained Time-O/C Reset	Testing

Voltage-Controlled and Voltage-Restrained Time-Overcurrent Setting Calculation

Information Needed

- Generator nominal voltage, VNOM
- Generator current for long duration system phase fault, If, A primary
- Generator voltage for system phase fault, Vf, V primary
- Generator voltage and current transformer ratios to 1, PTR and CTR

Recommendations

Choose either the voltage-controlled or voltage-restrained time-overcurrent element for system phase fault backup protection when overcurrent relays are used for primary system protection. Generally, the voltage-controlled element provides adequate backup protection and consistent performance. Use the voltage-restrained element if your protection standards or preferences require it.

Voltage-Controlled Time-Overcurrent Settings

Set the 51CP pickup setting less than the generator fault duty, calculated using the generator steady-state reactance, X_d (transient reactance X'_d may be used if the generator excitation system is able to support higher fault voltage and current). This value may safely be below

maximum load, as the element is only enabled during low-voltage fault conditions. Divide the generator fault duty by the phase current transformer ratio, CTR, to find the element pickup current in secondary amps.

$$51CP \leq \frac{IP}{CTR}$$

Select a curve shape and time-dial that allow this element to coordinate with the system primary protection.

$$51CC = U2$$

$$51CTD = 3.00$$

Electromechanical reset emulation should be applied if the system phase overcurrent relays are induction disk relays; otherwise, electromechanical reset emulation is not necessary.

$$51CRS = N$$

By definition, this element should be torque controlled by an undervoltage element. To prevent misoperation if a potential transformer fuse blows, the element is also torque controlled by the !60LOP Relay Word bit.

$$51CTC = 27PP1 * !60LOP$$

To enable and set the phase-to-phase undervoltage element, set

$$E27 = Y$$

$$27PP1 = 0.8 \bullet VNOM \text{ volts}$$

With the settings above, the 51C element is enabled whenever generator phase-to-phase voltage is less than 80 percent of nominal, as long as there is not a simultaneous loss-of-potential condition. You may wish to use a different undervoltage element pickup setting.

Voltage-Restrained Time-Overcurrent Settings

When using the 51V element, set the 51VP pickup setting greater than the maximum generator phase current expected under full voltage, nonfault conditions. Divide this current by the phase current transformer ratio, CTR, to find the element pickup current in secondary amps.

$$51VP > \frac{\text{max load current}}{CTR} \text{ amps}$$

Select a curve shape and time-dial that allow this element to coordinate with the system primary protection.

$$51VC = U2$$

$$51VTD = 3.00$$

Electromechanical reset emulation should be applied if the system phase overcurrent relays are induction disk relays; otherwise, electromechanical reset emulation is not necessary.

$$51VRS = N$$

Because this element reduces its pickup setting automatically as generator voltage decreases, the element should not be permitted to operate if there is a blown potential transformer fuse condition. To prevent misoperation if a potential transformer fuse blows, the element is torque controlled by the !60LOP Relay Word bit.

51VTC =!60LOP

With the settings above, the 51V element is enabled as long as there is not a loss-of-potential condition.

Overcurrent Tripping

Because these overcurrent elements detect system faults of an enduring and potentially serious nature, tripping is generally applied to the generator main breaker, the field breaker, the prime mover, and the generator lockout relay. Refer to ***Section 4: SELOGIC Control Equations*** for more detail and examples of tripping SELOGIC control equations.

Element Operating Characteristics

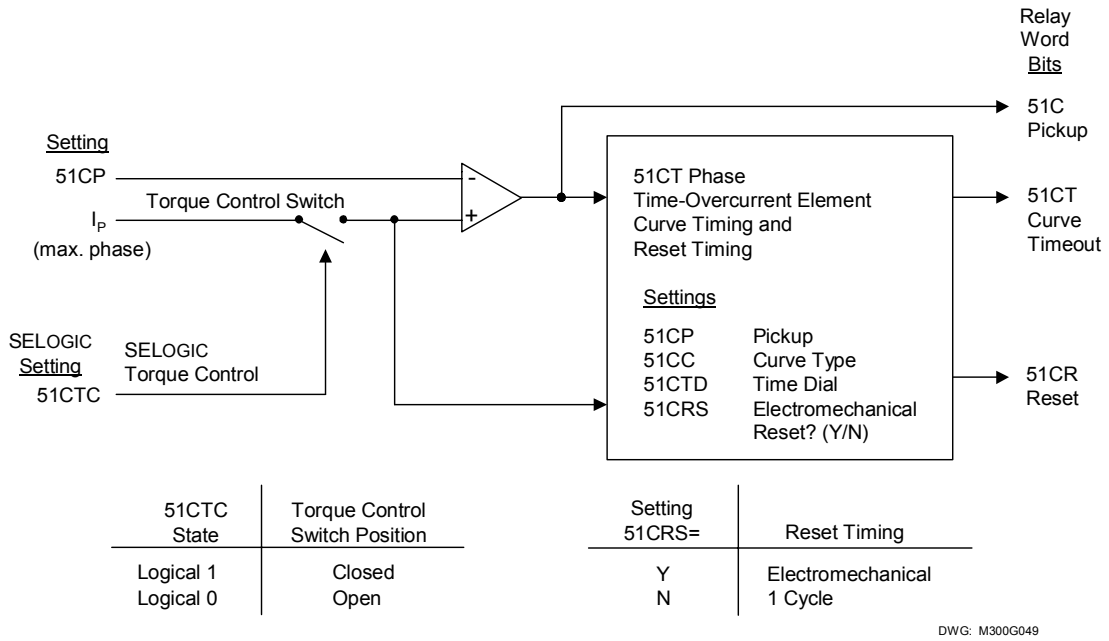

51CTC State	Torque Control Switch Position
Logical 1	Closed
Logical 0	Open

Setting 51CRS=	Reset Timing
Y	Electromechanical
N	1 Cycle

Figure 2.40: Voltage-Controlled Phase Time-Overcurrent Element 51CT

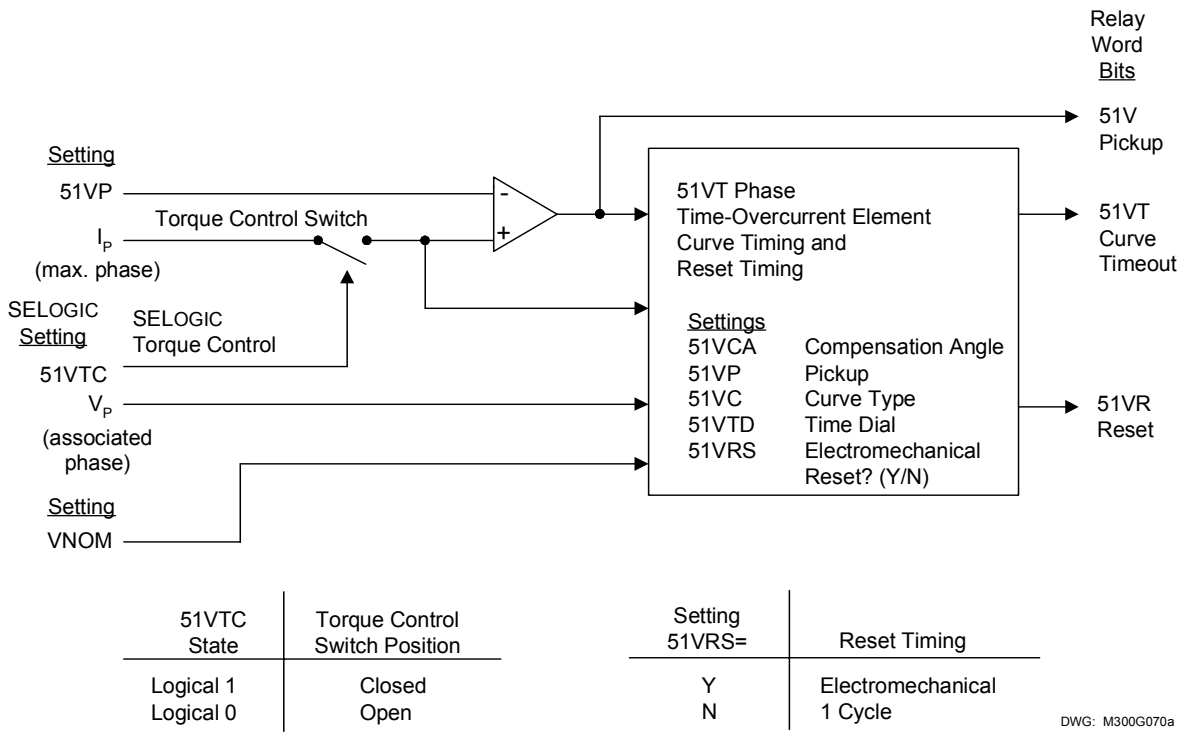

51VTC State	Torque Control Switch Position
Logical 1	Closed
Logical 0	Open

Setting 51VRS=	Reset Timing
Y	Electromechanical
N	1 Cycle

Figure 2.41: Voltage-Restrained Phase Time-Overcurrent Element 51VT

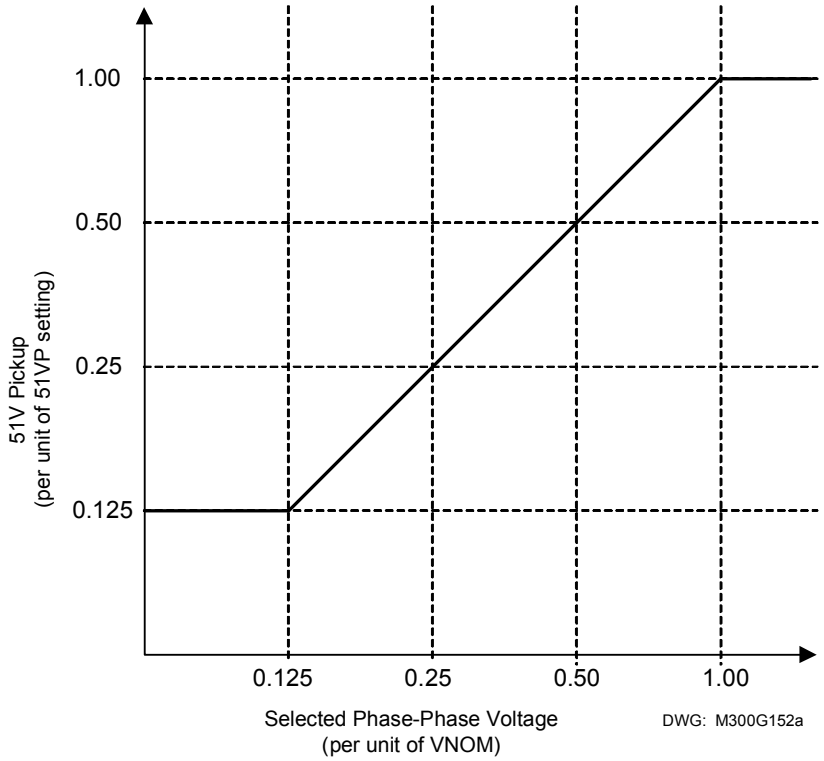

Figure 2.42: 51V Element Voltage Restraint Characteristic

OVER/UNDER VOLTAGE ELEMENTS

Element Description

Functional Description

The SEL-300G offers the following over- and undervoltage elements for protection, indication, and control functions.

- Two levels of phase undervoltage, 27P1 and 27P2
- Two levels of phase-to-phase undervoltage, 27PP1 and 27PP2
- One level of positive-sequence undervoltage, 27V1
- Two levels of phase overvoltage, 59P1 and 59P2
- Two levels of residual overvoltage, 59G1 and 59G2
- One level of negative-sequence overvoltage, 59Q
- One level of positive-sequence overvoltage, 59V1
- Two levels of phase-to-phase overvoltage, 59PP1 and 59PP2

Phase undervoltage elements operate using the minimum of the measured phase voltage magnitudes, operating if any single-phase measurement falls below the set threshold. The phase-to-phase undervoltage element operates using the minimum of the measured phase-to-phase voltages. The positive-sequence undervoltage element operates when the measured positive-sequence voltage falls below the set threshold.

Phase overvoltage elements operate using the maximum of the measured phase voltage magnitudes. Residual overvoltage elements operate using the sum of the three-phase voltage measurements. The positive- and negative-sequence overvoltage elements operate when their respective measurement exceeds their set threshold. The phase-to-phase overvoltage element operates when the maximum phase-to-phase voltage exceeds the set threshold.

Setting Descriptions

Enable Undervoltage (U/V) Protection (Y, N) E27 = Y

Set E27 = Y to enable the 27P1, 27P2, 27PP1, 27PP2, and 27V1 undervoltage elements. If none of these elements is required, set E27 = N. When E27 = N, the elements listed above are hidden and the pickup settings do not need to be entered. When DELTA_Y = D, the 27P1 and 27P2 Relay Word bits are inactive and the relay hides the settings 27P1P and 27P2P, which do not need to be entered.

Enable Overvoltage (O/V) Protection (Y, N) E59 = Y

Set E59 = Y to enable the 59P1, 59P2, 59G1, 59G2, 59Q, 59V1, and 59PP overvoltage elements. If none of these elements is required, set E59 = N. When E59 = N, the elements listed above are hidden and the pickup settings do not need to be entered. When DELTA_Y = D, the 59P1, 59P2, 59G1, and 59G2 Relay Word bits are inactive and the relay hides the settings 59P1P, 59P2P, 59G1P, and 59G2P which do not need to be entered.

Level 1 Phase U/V Pickup (OFF, 0.1–200.0 V) 27P1P = 54.0

Level 2 Phase U/V Pickup (OFF, 0.1–200.0 V) 27P2P = OFF

Pos.-Seq. U/V Pickup (OFF, 0.1–200.0 V) 27V1P = OFF

Level 1 Phase-to-Phase U/V Pickup (OFF, 0.1–200.0 V)	27PP1 = 93.5
Level 2 Phase-to-Phase U/V Pickup (OFF, 0.1–200.0 V)	27PP2 = 93.5
Level 1 Phase O/V Pickup (OFF, 0.0–200.0 V)	59P1P = 74.0
Level 2 Phase O/V Pickup (OFF, 0.0–200.0 V)	59P2P = OFF
Level 1 Residual O/V Pickup (OFF, 0.0–200.0 V)	59G1P = 10.0
Level 2 Residual O/V Pickup (OFF, 0.0–200.0 V)	59G2P = OFF
Neg.-Seq. O/V Pickup (OFF, 0.0–200.0 V)	59QP = OFF
Pos.-Seq. U/V Pickup (OFF, 0.0–200.0 V)	59V1P = OFF
Level 1 Phase-to-Phase O/V Pickup (OFF, 0.0–300.0 V) (OFF, 0.0–200.0 V; if DELTA_Y = D)	59PP1 = OFF
Level 2 Phase-to-Phase O/V Pickup (OFF, 0.0–300.0 V) (OFF, 0.0–200.0 V; if DELTA_Y = D)	59PP2 = OFF

None of the elements is equipped with a definite-time delay. If a definite-time characteristic is desired, use a SELOGIC control equation variable and its built-in time-delay pickup and dropout timers.

Relay Word Bits

Relay Word Bit	Function Description	Typical Applications
27P1	Level 1 Phase Undervoltage Pickup	Indication, Control
27P2	Level 2 Phase Undervoltage Pickup	Indication, Control
27V1	Positive-Sequence Undervoltage Pickup	Indication, Control
27PP1	Level 1 Phase-to-Phase Undervoltage Pickup	Indication, Control
27PP2	Level 2 Phase-to-Phase Undervoltage Pickup	Indication, Control
59P1	Level 1 Phase Overvoltage Pickup	Indication, Control
59P2	Level 2 Phase Overvoltage Pickup	Indication, Control
59G1	Level 1 Residual Overvoltage Pickup	Indication, Control
59G2	Level 2 Residual Overvoltage Pickup	Indication, Control
59Q	Negative-Sequence Overvoltage Pickup	Indication, Control
59V1	Positive-Sequence Overvoltage Pickup	Indication, Control
59PP1	Level 1 Phase-to-Phase Overvoltage Pickup	Indication, Control
59PP2	Level 2 Phase-to-Phase Overvoltage Pickup	Indication, Control

Voltage Element Setting Calculation

Enable and apply those voltage elements that are required for your specific control scheme. Pickup settings and time delays are governed by the requirements of the application. Where specific elements typically are applied for torque control, setting guidelines have been provided in sections associated with the controlled element. Set the pickup of unused elements to OFF.

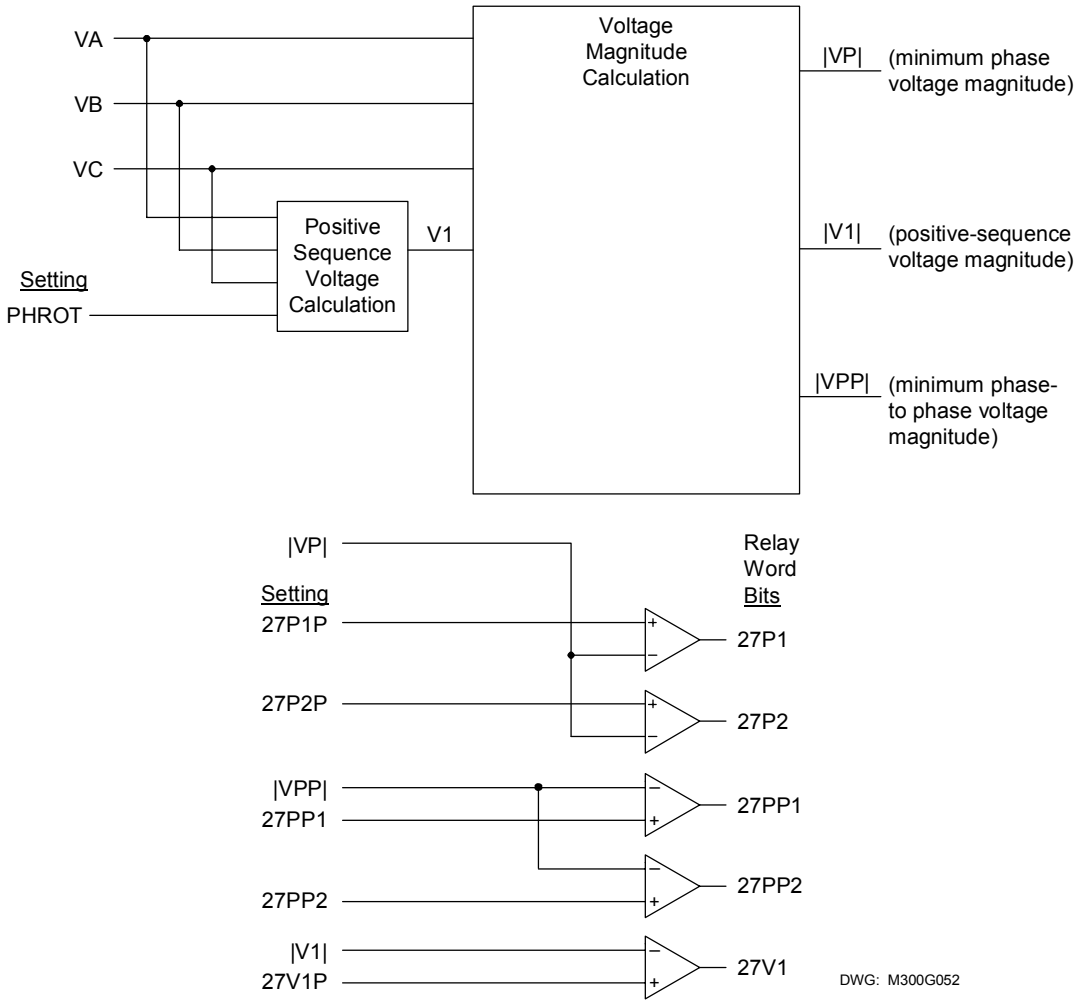

Figure 2.43: Undervoltage Element Logic Diagram

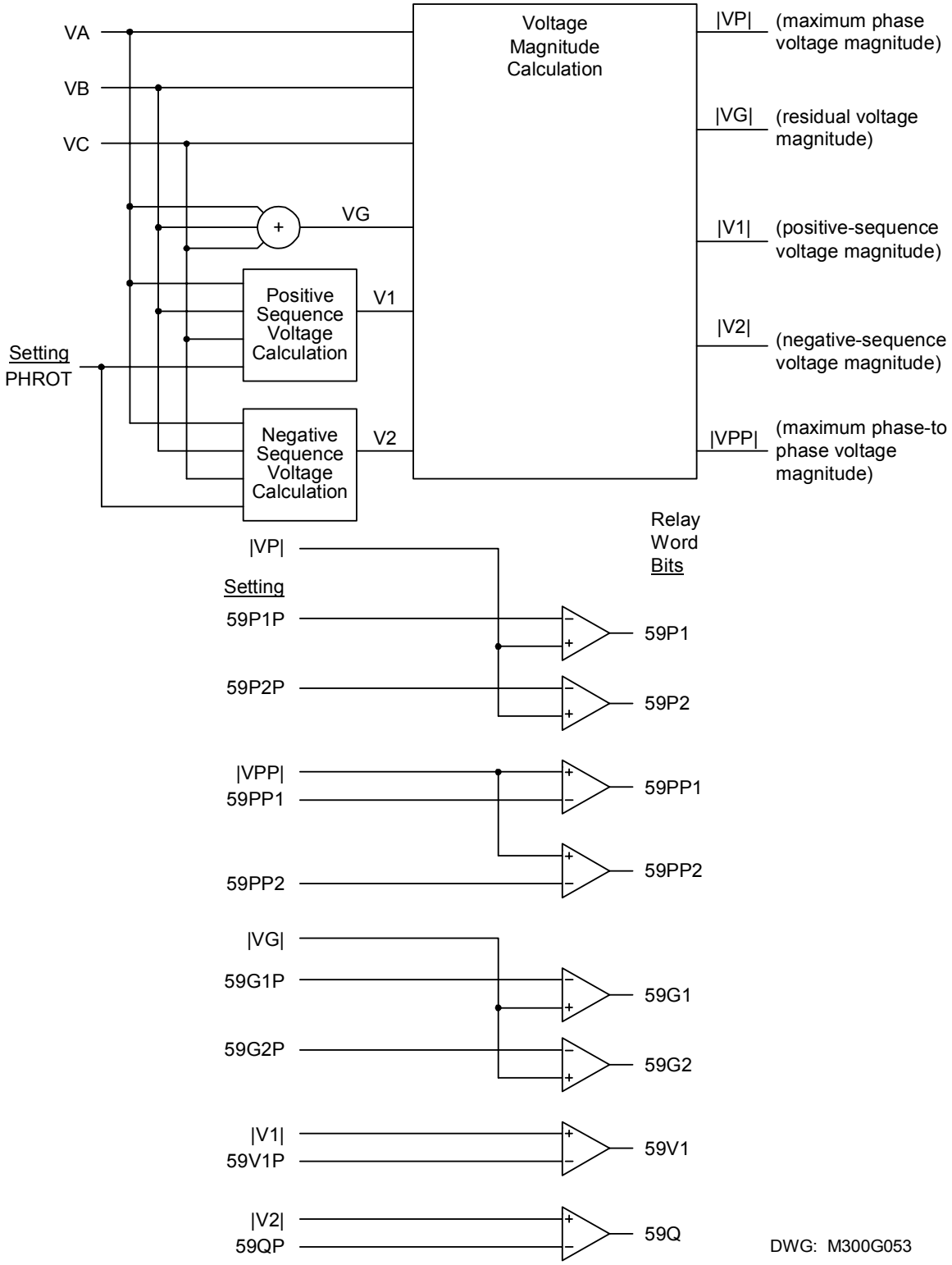

Figure 2.44: Overvoltage Element Logic Diagram

LOSS-OF-POTENTIAL (60LOP) PROTECTION

Element Description

Functional Description

The SEL-300G provides an easy method to detect loss of relaying potential caused by blown potential fuses or operation of molded case circuit breakers in the potential circuit secondary. The relay declares a loss-of-potential if there is a 10 percent drop in the measured positive-sequence voltage with no corresponding change in positive-, negative-, or zero-sequence currents.

If the condition persists for 60 cycles, it latches in. 60LOP resets when V1 returns to greater than 0.43 • VNOM, and V0 and V2 are both less than 5 V secondary.

Setting Descriptions

This function has no settings and is always active.

Relay Word Bits

Relay Word Bit	Function Description	Typical Applications
60LOP	Loss of Relaying Potential Detected	Indication, Control

100% STATOR GROUND PROTECTION ELEMENTS

Element Description

Functional Description

The SEL-300G provides a two-zone function designed to detect stator winding ground faults on resistance and high-impedance grounded generators. The Zone 1 element, 64G1, uses a fundamental-frequency neutral overvoltage element that is sensitive to faults in the middle and upper portions of the winding. The Zone 2 element, 64G2, uses a third-harmonic voltage differential function to detect faults in the upper and lower portions of the winding. By using the two zones together, the relay provides 100 percent stator ground fault coverage.

Note: Most generators produce enough third-harmonic voltage for proper application of the 64G2 element; however, some generators (e.g., those with 2/3 pitch winding) may not. In those cases the element based on the third-harmonic voltage, such as the 64G2, cannot be used for 100 percent Stator Ground Protection.

When a ground fault occurs high in the winding of a resistance or high-impedance grounded generator, a voltage appears at the generator neutral. The neutral voltage magnitude during the fault is proportional to the fault location within the winding. For instance, if a fault occurs 85 percent up the winding from the neutral point, the neutral voltage is 85 percent of the generator rated line-neutral voltage. The SEL-300G asserts the 64G1 Relay Word bit when neutral voltage is greater than the 64G1P setting.

This function detects stator ground faults in all but the bottom 5–10 percent of the generator winding. In this area close to the generator neutral, the neutral voltage does not increase significantly during a generator ground fault. The SEL-300G uses the third-harmonic voltage differential element to detect faults in this area.

The 64G2 third-harmonic voltage differential element measures the third-harmonic voltage magnitudes at the generator terminals and neutral point, then evaluates the equation:

$$\left\| VP3 \right| * 64RAT - \left| VN3 \right\| > 64G2P$$

where

VP3	= measured generator terminal third-harmonic voltage magnitude
64RAT	= third-harmonic voltage ratio setting
VN3	= measured generator neutral third-harmonic voltage magnitude
64G2P	= differential sensitivity setting

If the difference between the measured third-harmonic voltage magnitudes is greater than the 64G2P setting, the relay asserts the 64G2 Relay Word bit.

Figure 2.45 illustrates the 64G1 and 64G2 element operating characteristics. Notice that, while the 64G2 element detects faults near the neutral and generator terminals, it has a dead-band near the middle of the winding. The width of this dead-band is governed by the 64G2P setting and the amount of third-harmonic voltage that the generator produces. The 64G1 element detects generator winding faults in the 64G2 element dead-band and vice versa.

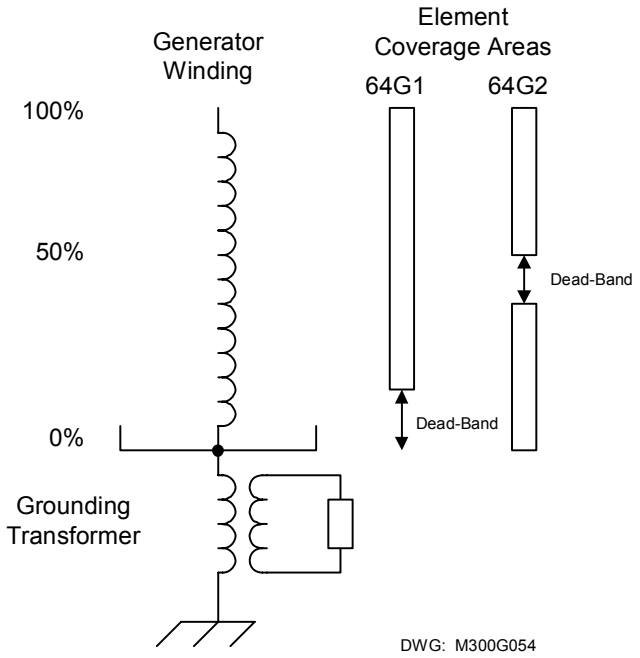

Figure 2.45: 64G Element Operating Characteristic

Typical generators produce varying amounts of third-harmonic voltage, depending on machine construction and loading. The magnitudes of terminal and neutral third-harmonic voltage may not be equal, and their rates of increase with increasing load may be different as well. Note also that the third harmonic characteristics of generators have been observed to change over time,

perhaps due to modifications to auxiliary equipment connected to the generator bus. After such modifications, repeat the commissioning procedure and adjust the settings of the element.

The 64RAT setting is calculated to balance the voltage differential element performance over the range of machine loading. To properly set this element for an individual generator, it is necessary to operate the generator at full load and no load outputs, use the relay **METER** command to record the measured third-harmonic voltages, then calculate the settings. Details of this procedure are provided below. More elaborate procedures using the third harmonic measurements at several load outputs and varying power factors can be found in the SEL application guide *Setting 100% Stator Ground Fault Detection Elements in the SEL-300G Relay*, available on the SEL website.

The Zone 2 stator ground element also may be applied as a neutral third-harmonic undervoltage element. When you set 64RAT = 0.0, the relay disables the third-harmonic voltage differential function. 64G2 acts as a neutral third-harmonic undervoltage element (27N3) with voltage pickup defined by 64G2P.

When open delta generator PTs are applied (DELTA_Y = D), the relay automatically uses neutral third-harmonic undervoltage protection.

Setting Descriptions

Enable 100% Stator Ground Protection (Y, N) E64 = Y

Set E64 = Y to enable the 100 percent stator ground protection elements. If the relay is used to protect a solidly grounded machine, these elements are not effective and should be disabled by setting E64 = N. When E64 = N, the 64G1 and 64G2 elements are hidden and their settings do not need to be entered.

64G ELEMENT

Zone 1 Neutral O/V Pickup (OFF, 0.1–150.0 V)	64G1P = 5.0
Zone 1 Time Delay (0.00–400.00 s)	64G1D = 0.75
Zone 2 Differential Voltage (OFF, 0.1–20.0 V)	64G2P = 2.5
Zone 2 Ratio Setting (0.0–5.0)	64RAT = 1.0
Zone 2 Time Delay (0.00–400.00 s)	64G2D = 0.08
64G Element Torque Control (SELOGIC control equation)	64GTC = 1

The 64G1P setting defines the sensitivity of the relay fundamental frequency neutral overvoltage element used to detect stator ground faults in the middle and upper areas of the generator winding. The 64G1D setting defines the Zone 1 element time delay.

The 64G2P setting defines the sensitivity of the relay third-harmonic voltage differential function used to detect stator ground faults in the lower and upper areas of the generator winding. The 64RAT setting defines a balancing ratio used to provide consistent element performance over the range of machine operation. The 64G2D setting defines the Zone 2 element time delay.

64RAT is hidden and set to 0.0 when setting DELTA_Y = D.

The 64GTC torque-control setting disables both zones when its result is logical 0. Both zones are enabled when the 64GTC result is logical 1.

Loss-of-Potential and Other Supervision

When 64G2 is configured as a third-harmonic voltage differential element, the relay must have information about the level of third-harmonic voltage at the generator terminal. If the potential transformers are lost, the 64G2 element will operate and cause an unnecessary trip unless the element is supervised by the loss-of-potential detection logic of the SEL-300G relay.

In hydro-generator applications, where overspeed after load rejection events is possible, consider using an overfrequency element to disable the third-harmonic elements, as the change in generator frequency during overspeed may cause unexpected operation of the third-harmonic elements. Other supervision, such as breaker position (52A) or voltage (27PP1), may be required in some applications. This supervision can be implemented as shown below. See the SEL application guide, *Setting 100% Stator Ground Fault Detection Elements in the SEL-300G Relay*, for details.

Modify equations using 64G2T as shown in this example:

SV3 = … + (64G2T*52A*!60LOP) + …

Or,

SV3 = … + (64G2T*!27PP1*!60LOP) + …

Note: Use of the torque control equation for loss-of-potential supervision (e.g., 64GTC = !60LOP) is not recommended because it will unnecessarily block 64G1 as well as 64G2 for loss-of-potential condition.

Relay Word Bits

Relay Word Bit	Function Description	Typical Applications
64G1	Zone 1 Stator Ground Pickup	Indication, Event Triggering, SER Triggering, Testing
64G1T	Zone 1 Stator Ground Time-Delayed Trip	Tripping, SER Triggering
64G2	Zone 2 Stator Ground Pickup	Testing
64G2T	Zone 2 Stator Ground Time-Delayed Trip	Tripping, SER Triggering
T64G	Zone 2 Pickup for Ground Near Generator Terminals	Indication, Testing
N64G	Zone 2 Pickup for Ground Near Neutral	Indication, Testing

100% Stator Ground Protection Setting Calculation

Information Needed

- Generator nominal voltage, VNOM
- Generator grounding transformer ratio to 1 (use 1 if machine is resistance grounded)
- Generator neutral voltage transformer ratio to 1 (use 1 if relay is connected directly to grounding transformer secondary winding)
- Generator neutral voltage during system ground fault
  (This voltage is caused by capacitive coupling in the generator step-up transformer. If this voltage is not known, coordination can be made on a time basis.)
- Relay settings PTR, PTRN, and DELTA_Y

Third-Harmonic Voltage Differential Setting Recommendations (four-wire potentials required)

The setting procedure below assists you in calculating 64G element settings that will offer secure, sensitive detection of stator winding faults. As described above, the 64G2 element characteristic has a midwinding dead-band whose width is governed by the 64G2P setting. The 64G1 neutral overvoltage element provides sensitive detection of stator faults in the dead-band when its settings are selected according to the following procedure.

Note: Perform the procedure when the relay is first installed, but after the generator being protected is connected to its step-up transformer or bus. Remove the 64G2T Relay Word bit from the relay tripping SELOGIC control equations. Use 64G1P = 5 V during the test. Set the balance of tripping functions according to the requirements of the particular generator. Leave these tripping functions in service to protect the generator in the event that a fault occurs during the test sequence.

To simplify the calculations below, you may wish to use the Microsoft® Excel spreadsheet, *64G Element Setting Worksheet*, which is available on the SEL Internet home page at www.selinc.com or by contacting the factory.

1. Operate the generator at no load. Using the SEL-300G **METER** command, record the values of terminal and neutral third-harmonic voltage.

   VP3_NL = _____Third-harmonic terminal voltage, no load, V secondary

   VN3_NL = _____ Third-harmonic neutral voltage, no load, V secondary

2. Increase the generator loading to 100 percent. Record the values of terminal and neutral third-harmonic voltage. Shut down the generator; the rest of this procedure does not require that the generator be in service.

   VP3_FL = _____Third-harmonic terminal voltage, full load, V secondary.

   VN3_FL = _____Third-harmonic neutral voltage, full load, V secondary.

Note: A more elaborate procedure using the third harmonic measurements at several load outputs can be found in the SEL application guide *Setting 100% Stator Ground Fault Detection Elements in the SEL-300G Relay*. The steps in this manual are the minimum required to set the element. Using additional load and third-harmonic data, as discussed in the application guide, will result in a more secure setting and is recommended.

3. Calculate the 64RAT setting using the following equation:

   $$64RAT = \frac{(VN3_FL + VN3_NL)}{(VP3_FL + VP3_NL)}$$

   64RAT = _____

4. Calculate the minimum secure 64G2P setting using the equation:

   $$64G2P_{Min} = 1.1 \bullet (0.1 + |64RAT \bullet VP3x - VN3x|) \text{ volts}$$

   $64G2P_{Min}$ = _____volts

   Calculate $64G2P_{min}$ for each load point that third harmonic voltage data is available, where:

   VP3x = third harmonic terminal voltage, VP3, for the given load point
   VN3x = third harmonic neutral voltage, VN3, for the given load point

   Select the largest of the calculated values as $64G2P_{min}$.

Select the relay setting 64G2P as a value greater than or equal to $64G2P_{min}$. Higher values for 64G2P will generally increase the security of the element. Use Steps 5 and 6 to verify that adequate overlap between 64G1 and 64G2 can be maintained with the selected value of 64G2P.

This equation accounts for the maximum expected element error, plus adds an additional 5 percent measuring error to account for possible potential transformer errors.

5. Calculate the low-winding coverage offered by these settings when the machine is operated at no load using the following equation:

$$64G2_{Min} = \left(\frac{64RAT}{64RAT + \frac{PTR}{PTRN}} - \frac{64G2P}{\left(64RAT + \frac{PTR}{PTRN}\right) \bullet (VP3_NL + VN3_NL) \bullet \frac{PTRN}{PTR}} \right) \bullet 100$$

$64G2_{Min}$ = _____ %

This value should be greater than 15 percent for most dependable stator ground protection.

Note: The minimum low winding coverage usually occurs at no load; however, this is not always the case. Verify coverage at all loads for which VP3 and VN3 are available. This calculation is performed automatically by the referenced spreadsheet.

6. Select the 64G1P setting to detect faults in the top 95–98 percent of the generator winding by using the following equation:

$$64G1P = \left(1 - \frac{95\%}{100\%}\right) \bullet \left(\frac{kV \bullet 1000}{1.73 \bullet PTRN}\right) \text{ V secondary, assuming 95 percent coverage}$$

where

kV = nominal machine line-to-line voltage, kV primary,
PTRN = Ngt • Nat,
Ngt = grounding transformer ratio to 1
Nat = auxiliary transformer ratio to 1, use 1 if relay VN input is connected directly to the grounding transformer secondary.

64G1P must be greater than 0.5 V secondary. Zero-sequence voltage can appear across the grounding transformer secondary during a system ground fault due to capacitive coupling between the windings of the unit transformer. If 64G1P is less than the zero-sequence voltage, then the 64G1D setting must be longer than system ground fault clearing time to provide security.

Ensuring $64G2_{Min} \geq 15\%$, and selecting 64G1P for at least 95 percent winding coverage, will give an overlap of 10 percent or greater between the elements.

7. Select the 64G2D delay setting, keeping in mind that detection of a single stator ground fault by this element may not require immediate tripping, because the element will only be used on generators where the ground-fault current is limited by the high grounding impedance. At minimum, the 64G2D setting must be longer than the time required for faults on the transmission system to be cleared, since faults and other disturbances may affect the measured harmonic voltages.

Third-Harmonic Neutral Undervoltage Setting Recommendations (use with open-delta potentials)

The vast majority of generator protection applications will benefit from the improved ground fault sensitivity offered by the third-harmonic voltage differential protection scheme described above. In the event that your protection standards require third-harmonic neutral undervoltage protection, use the following setting procedure to define the protection settings.

Note: Perform the procedure when the relay is first installed, but after the generator being protected is connected to its step-up transformer or bus. Remove the 64G2T Relay Word bit from the relay tripping SELOGIC control equation. Use 64G1P = 5 V during the test. Set the balance of tripping functions according to the requirements of the particular generator. Leave these tripping functions in service to protect the generator in the event that a fault occurs during the test sequence.

Typically, the minimum neutral third-harmonic voltage occurs at no-load conditions. However, some cases have been observed where the minimum voltage occurs with the machine partially loaded, so it is recommended to measure the neutral third-harmonic voltage at various load conditions to ensure that the minimum voltage is found.

1. Operate the generator at various loads. Using the SEL-300G **METER** command, record the values of neutral third-harmonic voltage.

   VN3_min = _____Minimum third harmonic neutral voltage V secondary.

2. Set the 64RAT setting equal to 0.0 to disable third-harmonic voltage differential protection and enable third-harmonic neutral undervoltage protection. The relay does this automatically and hides the 64RAT setting if DELTA_Y = D.

   $64RAT = 0.0$

3. Set the 64G2P setting approximately 50 percent of the generator minimum third-harmonic neutral voltage:

   $64G2P = 0.5 \bullet VN3_min$ V secondary

   64G2P = _____V secondary

4. It is not possible to calculate the low-winding coverage offered by this setting because the third-harmonic terminal voltages are not available.

5. Select the 64G1P setting to detect faults in the top 95–98 percent of the generator winding by using the following equation:

   $$64G1P = \left(1 - \frac{95\%}{100\%}\right) \bullet \left(\frac{kV \bullet 1000}{1.732 \bullet PTRN}\right), \text{ assuming 95\% coverage}$$

where

kV	= nominal machine line-to-line voltage, kV primary
PTRN	= Ngt • Nat
Ngt	= grounding transformer ratio to 1
Nat	= neutral voltage auxiliary transformer ration to 1, use 1 if relay VN input is connected directly to the grounding transformer secondary.

64G1P must be greater than 0.5 V secondary. Zero-sequence voltage can appear across the grounding transformer secondary during a system ground fault due to capacitive coupling between the windings of the unit transformer. If 64G1P is less than the zero-sequence voltage, then the 64G1D setting must be longer than system ground fault clearing time to provide security.

100% Stator Ground Fault Tripping

If company practice is to trip for stator ground fault, the 100 percent stator ground fault elements should be used to trip the generator main breaker, the field breaker, the prime mover, and the generator lockout relay. The 64G1T and 64G2T Relay Word bits should be used directly in the tripping SELOGIC control equations. If company practice is to alarm only for stator ground fault, use the 64G1T and 64G2T Relay Word bits to control outputs for alarming to an operator. Refer to ***Section 4: SELOGIC Control Equations*** for more detail and examples of tripping SELOGIC control equations.

Element Operating Characteristics

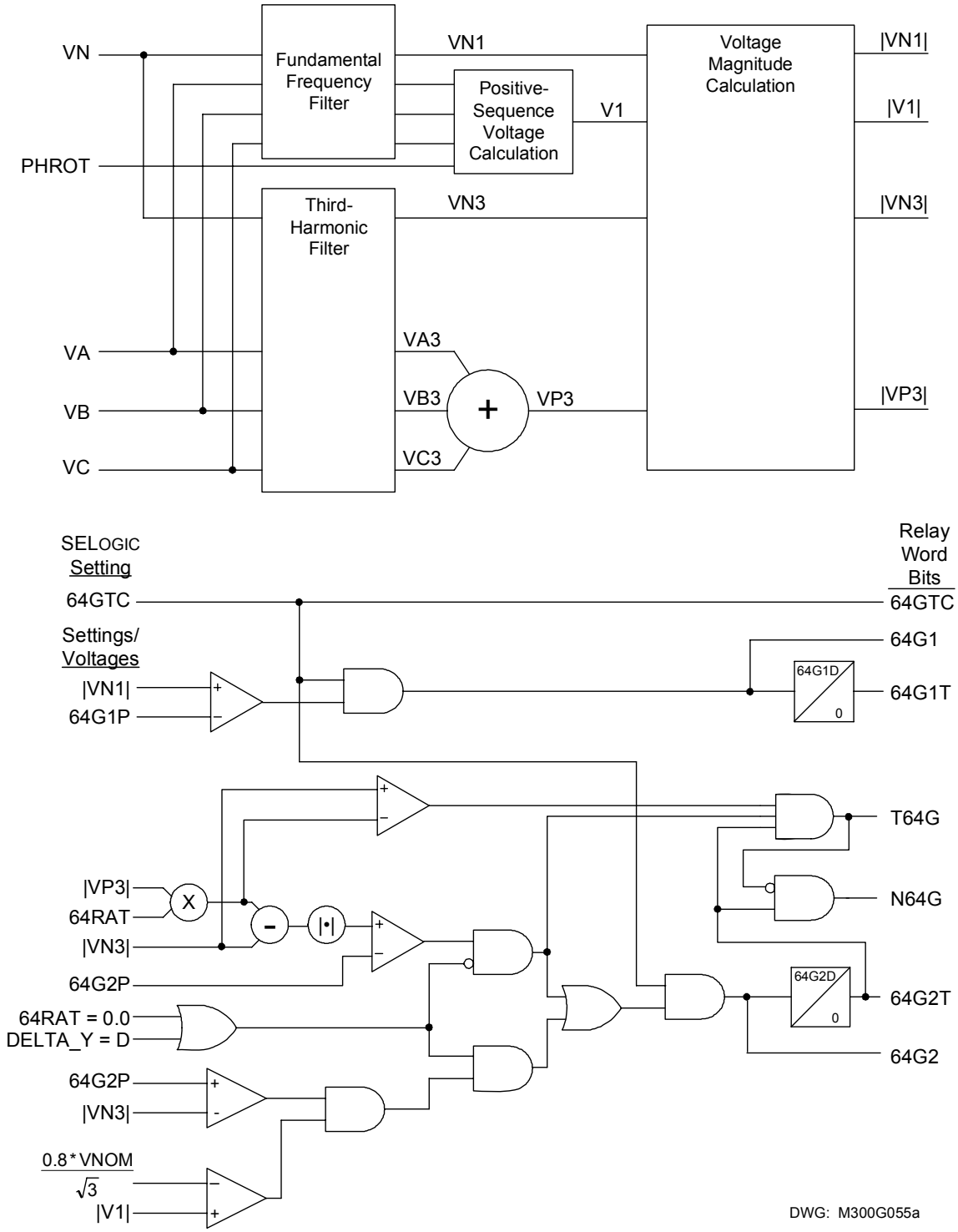

Figure 2.46: 64G Logic Diagram

FIELD GROUND PROTECTION

Element Description

Functional Description

The SEL-300G works with the SEL-2664 Field Ground Module to provide protection for the generator field winding.

Connect the SEL-2664 directly to two ends of the generator field winding and the rotor ground brush. The SEL-2664 calculates the insulation resistance value between the field winding and ground, and transmits the insulation resistance value to the SEL-300G using a fiber-optic cable with ST connectors and a transceiver (SEL-2812MR). Consult the ***SEL-2664 Instruction Manual*** for detailed instructions on setting up the SEL-2664.

Set the EIA-232 port in the SEL-300G to SEL protocol and 9600 baud rate to start receiving the insulation resistance value from the SEL-2664. Refer to Figure 1.5 for the connection diagram.

The SEL-300G compares the insulation resistance value to the Field Ground Protection element (64F) pickup settings (64F1P and 64F2P) to provide indication. Program two different 64F pickup levels to alarm and/or trip when the insulation resistance value causes the 64F elements (64F1T or 64F2T) to assert.

If there is no insulation deterioration, there is no leakage path between the field winding to ground; the insulation resistance value is extremely high. In this situation, however, due to sensitivity limits, the SEL-2664 calculates a very large insulation resistance value of 20 megohms. As soon as the field winding insulation develops a breakdown to the rotor iron (assuming the generator rotor iron is connected to ground through a grounding brush), the SEL-2664 detects a sharp drop in insulation resistance.

The technology used in SEL-2664 does not discriminate between one point of insulation breakdown and multiple points of insulation breakdown. A single point of insulation breakdown will not cause any harm to the generator. Multiple points of insulation breakdown could lead to very serious generator damages because the distribution of magnetic flux in the rotor will be substantially altered. When a different device (such as a generator vibration detector for example) is used for the detection of multiple points of insulation breakdown, SEL recommends using the SEL-2664 to generate an alarm only and to trip with the other device under supervision of the SEL-2664. When an additional device is not used, it is recommended to alarm and trip with the SEL-2664.

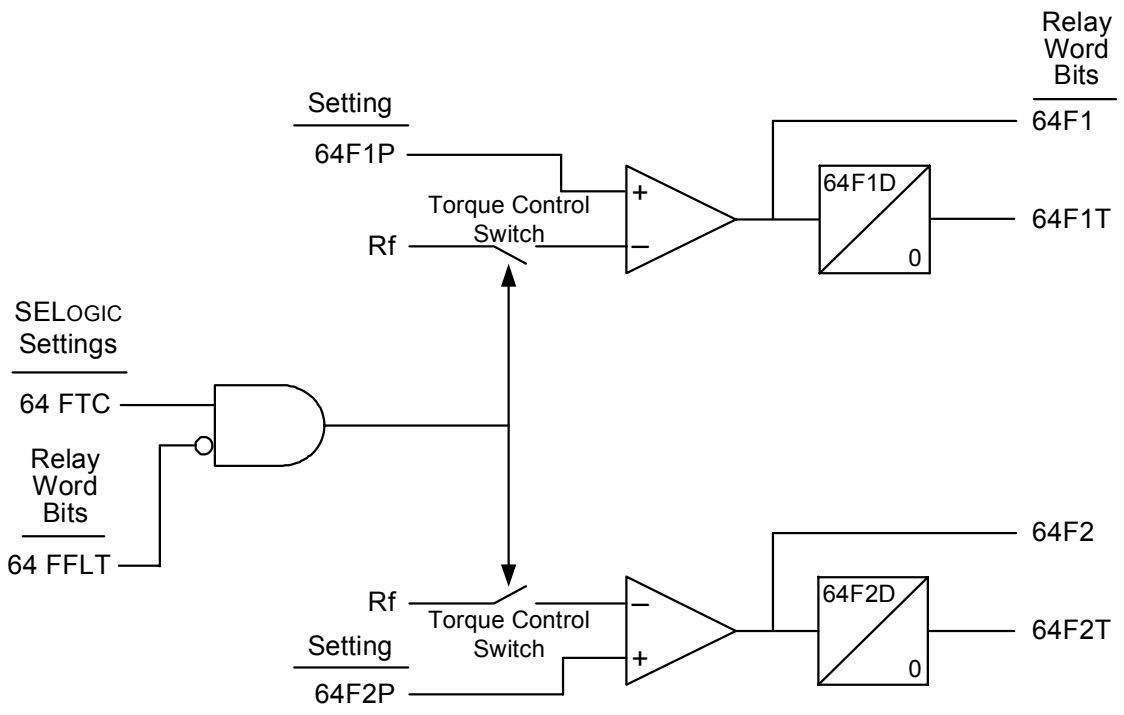

Note: If 64FTC = 1 and 64FFLT = 0, then Torque Control Switches Close.

Figure 2.47: Field Ground Protection (64F) Elements Logic

If 64FFLT = 1, indicating a non-functional SEL-2664 or fiber-optic connection, then the 64F elements are not calculated, the 64F1, 64F1T, 64F2, and 64F2T Relay Word bits are set to zero (0), and all accumulated timer values are reset to zero (0).

Setting Descriptions

Table 2.2: SEL-2664 Module Configuration Settings

Setting Prompt	Setting Range	Setting Name = Factory Default
64F Input Option	EXT, NONE	64FOPT = NONE

When the SEL-2664 module is not in use, set the 64F Input Option setting equal to NONE. When the SEL-2664 is connected to the generator field winding and the SEL-300G, set the 64F Input Option setting equal to EXT.

The relay automatically hides all other settings associated with the Field Ground Protection if you set 64FOPT equal to NONE.

Table 2.3: 64F Elements Settings

Setting Prompt	Setting Range	Setting Name = Factory Default	Hide Rule/ Usage Notes
Level 1 Pickup	OFF, 0.5–200.0 kOhms	64F1P = 100.0	Hide if 64FOPT = NONE
Level 1 Delay	0.0–99.0 s	64F1D = 60.0	Hide of 64FOPT = NONE or if 64F1P = OFF
Level 2 Pickup	OFF, 0.5–200.0 kOhms	64F2P = OFF	Hide if 64FOPT = NONE
Level 2 Delay	0.0–99.0 s	64F2D = 60.0	Hide if 64FOPT = NONE or if 64F2P = OFF

Set 64F element torque control equation (64FTC) to enable or disable the 64F elements. When the 64FTC SELOGIC equation is calculated equal to zero (0), the 64F1, 64F1T, 64F2, and 64F2T Relay Word bits are set to zero (0), and all accumulated timer values are reset to zero (0).

Table 2.4: 64 Elements Torque Control Equation

Setting Prompt	Setting Range	Setting Name = Factory Default	Hide Rule/ Usage Notes
64F Element Torque Control (SELOGIC Equation)	SV	1	Hide if 64FOPT = NONE

Relay Word Bits

64FTC	Field Ground Protection Torque Control	Indication
64F1	Level 1 Field Ground Protection Element Instantaneous Pickup	Control, Indication
64F1T	Level 1 Field Ground Protection Element Timed Out	Alarm
64F2	Level 2 Field Ground Protection Element Instantaneous Pickup	Control, Indication
64F2T	Level 2 Field Ground Protection Element Timed Out	Tripping
64FFLT	Indicate a non-functional SEL-2664 or fiber-optic connection	Indication

Note: The above Relay Word bits are not programmed for any action in the factory default settings. They must be added to appropriate SELOGIC control equations and SER settings for Tripping, Alarm, SER triggering, etc.

OUT-OF-STEP ELEMENT–SINGLE BLINDER SCHEME

Element Description

Functional Description

The SEL-300G contains an out-of-step element to detect out-of-step conditions between two electrical sources. Two interconnected systems can experience an out-of-step condition for several reasons. For example, loss of excitation can cause a generator to lose synchronism with the rest of the system. Similarly, delayed tripping of a generator breaker to isolate a fault can cause the generator to go out-of-step with the rest of the system.

It is imperative to detect and isolate an out-of-step condition as early as possible because the resulting high peak currents, winding stresses, and high shaft torques can be very damaging to the generator and the associated generator step-up transformer.

The SEL-300G implements two out-of-step tripping schemes: single blinder and double blinder. Users can select whichever scheme suits their application or can disable out-of-step protection.

The single blinder scheme, shown in Figure 2.48, consists of mho element 78Z1, right blinder 78R1, and left blinder 78R2.

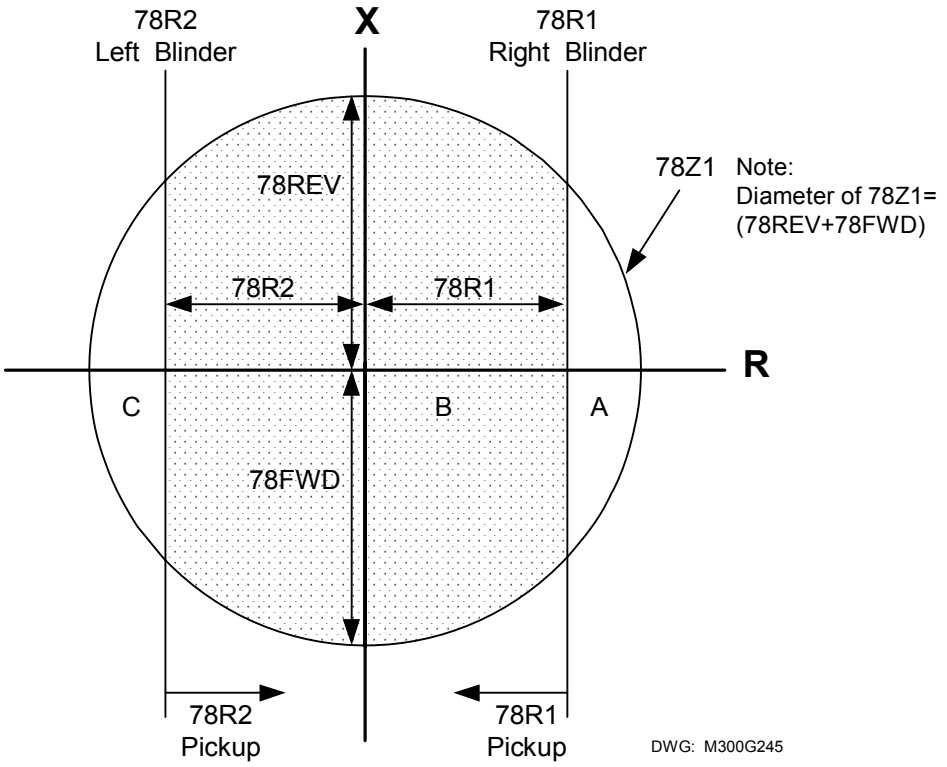

Figure 2.48: Single Blinder Scheme Operating Characteristics

This scheme detects an out-of-step condition by tracking the path of positive-sequence impedance trajectories that pass through the protection zone. If the relay detects an out-of-step condition, it asserts the following Relay Word bits:

- Relay Word bit SWING picks up when the positive-sequence impedance moves from the load region into Area A (left blinder 78R2 and mho element 78Z1 assert).
- Relay Word bit OOS picks up when the impedance trajectory advances further to Area B between the two blinders (right blinder 78R1, left blinder 78R2, and mho element 78Z1 assert).
- At the time the impedance trajectory exits the mho circle via Area C, the rising-edge triggered timer with 78TD pickup delay and 78TDURD dropout-delay starts timing. Relay Word bit OOST remains picked up for 78TDURD seconds after the pickup delay time 78TD expires.
- The above description is only for trajectories traveling from right to left. Out-of-step trajectories traveling from left to right traverse the protection zone in the reverse sequence (i.e., from Area C to B to A). The Relay Word bits assert in the same way whether trajectories travel from right to left or from left to right.

The single blinder scheme distinguishes between short circuit faults and out-of-step conditions by tracking the path of the impedance trajectory. During short circuit faults, the impedance will move from the load region to inside the mho element and between the two blinders almost instantaneously preventing the out-of-step function from picking up.

Figure 2.49 shows the logic diagram for the single blinder scheme. In the figure, the states of 78R1 and 78R2 are latched on the rising edge of SWING to determine if the swing has entered the 78Z1 mho circle from the right or the left. (For an OOST to occur, the swing must exit the 78Z1 mho circle in the opposite direction from which it entered.) The latched states of 78R1 and 78R2 are retained until the next time SWING asserts, which is the next time a power system swing occurs.

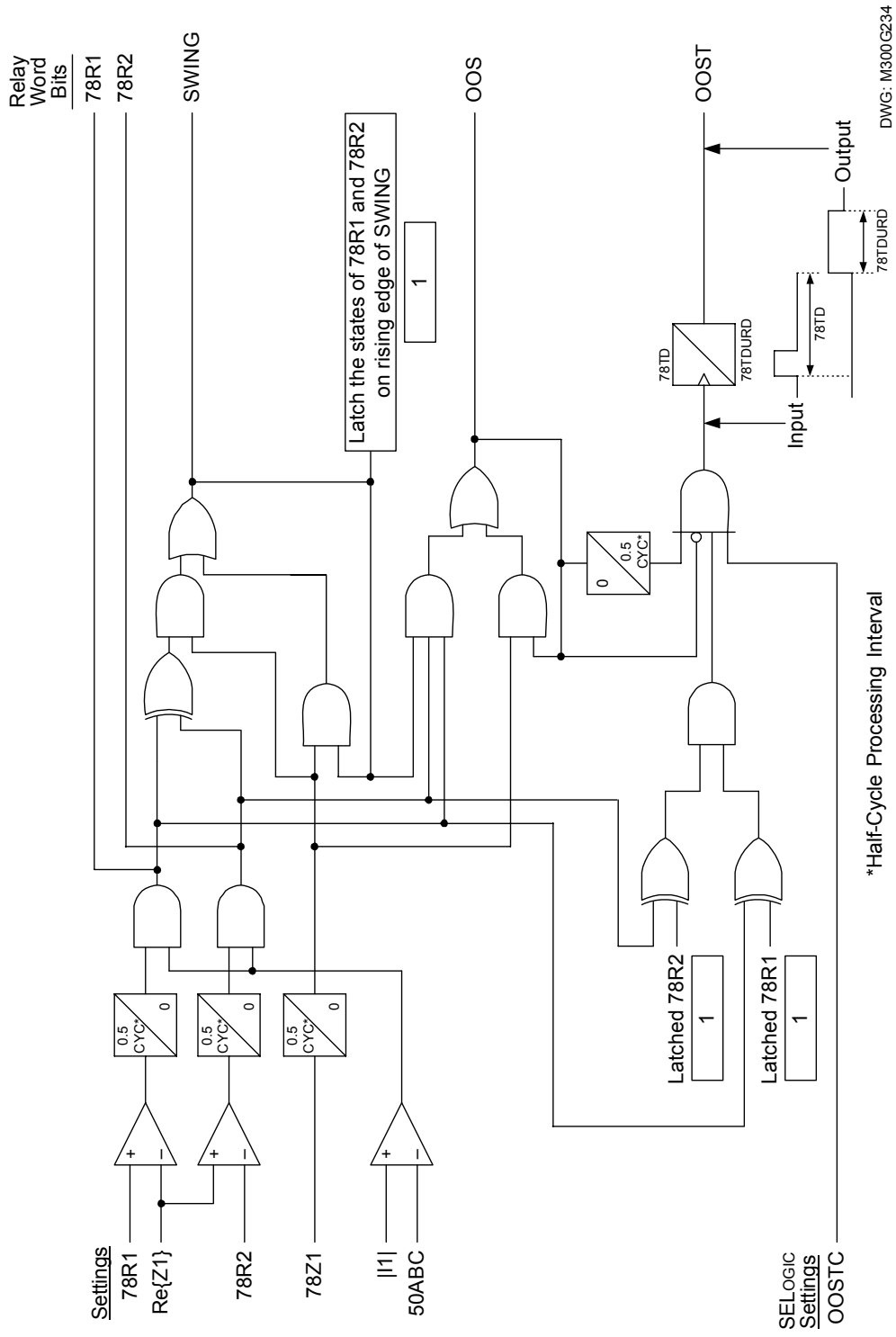

Figure 2.49: Single Blinder Scheme Logic Diagram

Setting Descriptions

Enable Out-of-Step Protection (1B, 2B, N)	E78 = 1B

Set E78 = 1B or 2B to enable out-of-step protection elements. If out-of-step protection is not required, set E78 = N. E78 = 1B requires the following entries:

Forward Reach Reactance (0.1–100.0 Ohms)	78FWD = 8.0
Reverse Reach Reactance (0.1–100.0 Ohms)	78REV = 8.0
Right Blinder (0.1–50.0 Ohms)	78R1 = 6.0
Left Blinder (0.1–50.0 Ohms)	78R2 = 6.0
Out-of-Step Trip Delay (0.00–1.00 seconds)	78TD = 0.00
Out-of-Step Trip Duration (0.00–5.00 seconds)	78TDURD = 3.00
Pos.-Seq. Current Supervision (0.25–30.00 Amps)	50ABC = 0.25
78 Element Torque Control (SELOGIC control equation)	OOSTC = 1

Notes: The values indicated above are default settings for a 5 A relay. For a 1 A relay, multiply ohms by five and divide amperes by five.

The sum of the forward and reverse reaches (the diameter of the mho circle) has to be 100 ohms or less for a 5 A relay and 500 ohms or less for a 1 A relay.

The blinder settings must be greater than or equal to five percent of either the forward or the reverse reach, whichever is greater.

The 78 Element Torque Control SELOGIC control equation OOSTC has a default setting of one. If this value is left at one, the out-of-step element will not be controlled by any other conditions external to the element. However, users can block the operation of the 78 element for certain conditions, such as the presence of excessive negative-sequence currents, by setting OOSTC to !46Q1. Refer to ***Section 4: SELOGIC Control Equations*** for a detailed discussion of SELOGIC control equations.

The trip delay timer also has an adjustable dropout delay 78TDURD (Trip Duration). The 78TDURD should be set appropriately if the Relay Word bit OOST is configured to operate an output contact directly, instead of being routed through the common trip logic. Default setting for the 78TDURD is three seconds. However, if Relay Word bit OOST is in SELOGIC trip equations TR1 through TR4, set 78TDURD to zero seconds because the common trip logic has an identical timer, TDURD. Refer to ***Section 4: SELOGIC Control Equations*** for details regarding trip logic.

The scheme includes positive-sequence current supervision setting 50ABC, which has a setting range of 0.25–30.00 A for 5 A relays and 0.05–6.00 A for 1 A relays. Normally, a setting of 0.25 A for 5 A relays is adequate for most applications. However, a higher setting can be applied based on minimum expected swing currents. Note that the positive-sequence current levels below the 50ABC setting will block the out-of-step function.

Both 78R1 and 78R2 must be within the mho circle.

Relay Word Bits

Relay Word Bit	Function Description	Typical Applications
78R1	Right Blinder Pickup	Event Triggering, SER Triggering, Testing
78R2	Left Blinder Pickup	Event Triggering, SER Triggering, Testing
78Z1	Mho Element Pickup	Event Triggering, SER Triggering, Testing
SWING	Swing Condition Detected	Event Triggering, SER Triggering, Testing
OOS	Out-of-Step Condition Detected	Event Triggering, SER Triggering, Testing
OOST	Out-of-Step Tripping	Event Triggering, SER Triggering, Testing, Tripping

Settings Calculation

Information Needed

- Generator transient reactance, X'_d, in secondary ohms
- Generator step-up transformer impedance in secondary ohms
- Impedance of line or lines beyond the generator step-up transformers, if needed

Convert all impedances to generator base kV.

Recommendations

Figure 2.50 shows the elements set per the following recommendations.

A transient stability study normally provides adequate data for setting the elements and timers properly. The out-of-step protection zone, which is limited by mho element 78Z1, should extend from the generator neutral to the high-side bushings of the generator step-up transformer. Normally, set forward reach 78FWD at 2–3 times the generator transient reactance X'_d and set reverse reach 78REV at 1.5–2.0 times the transformer reactance, XT, to have an adequate coverage plus some margins.

Set the left and right blinders to detect all out-of-step conditions. To do this, the right and left blinders are set so that the equivalent machine angles α and β are approximately 120 degrees, as shown in Figure 2.50. Separation angles of 120 degrees or greater between the two sources usually results in loss of synchronism.

Make sure that the mho element and the blinders do not include the maximum possible generator load to avoid assertion of 78Z1, 78R1, and 78R2 under normal system operation.

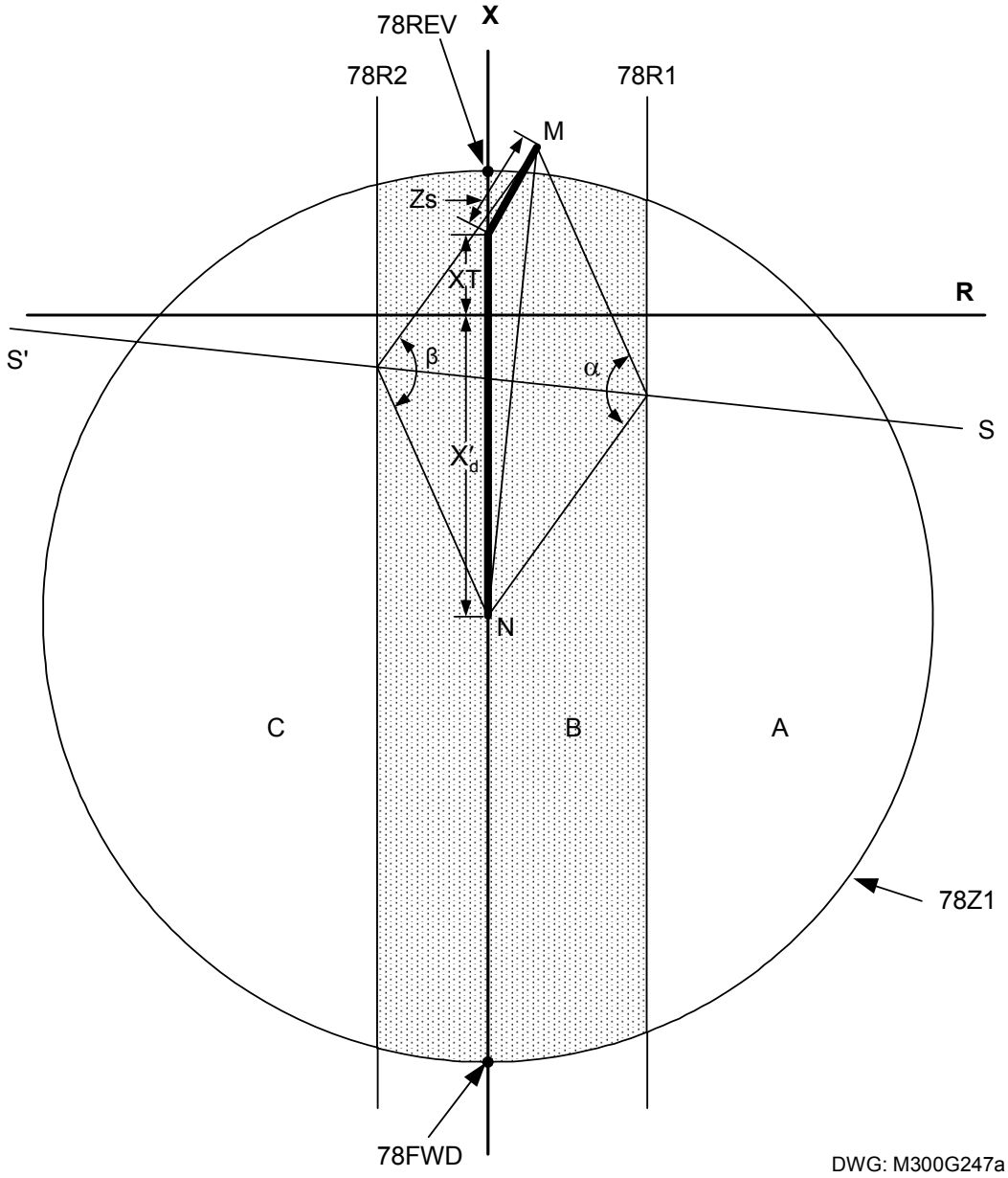

78FWD:	Forward Reach	Zs:	System Impedance
78REV:	Reverse Reach	M-N:	Total Impedance Between Generator and System
X'_d:	Generator Transient Reactance	S-S':	Perpendicular Bisector of M-N
XT:	Transformer Reactance	α and β:	Angle of Separation Between Generator and System

Figure 2.50: Single Blinder Typical Settings

OUT-OF-STEP ELEMENT–DOUBLE BLINDER SCHEME

Element Description

Functional Description

The SEL-300G contains an out-of-step element to detect out-of-step conditions between two electrical sources. Two interconnected systems can experience an out-of-step condition for several reasons. For example, loss of excitation can cause a generator to lose synchronism with the rest of the system. Similarly, delayed tripping of a generator breaker to isolate a fault can cause the generator to go out-of-step with the rest of the system.

It is imperative to detect and isolate an out-of-step condition as early as possible because the resulting high peak currents, winding stresses, and high shaft torques can be very damaging to the generator and the associated generator step-up transformer.

The SEL-300G implements two out-of-step tripping schemes: single blinder and double blinder. Users can select whichever scheme suits their application, or can disable out-of-step protection.

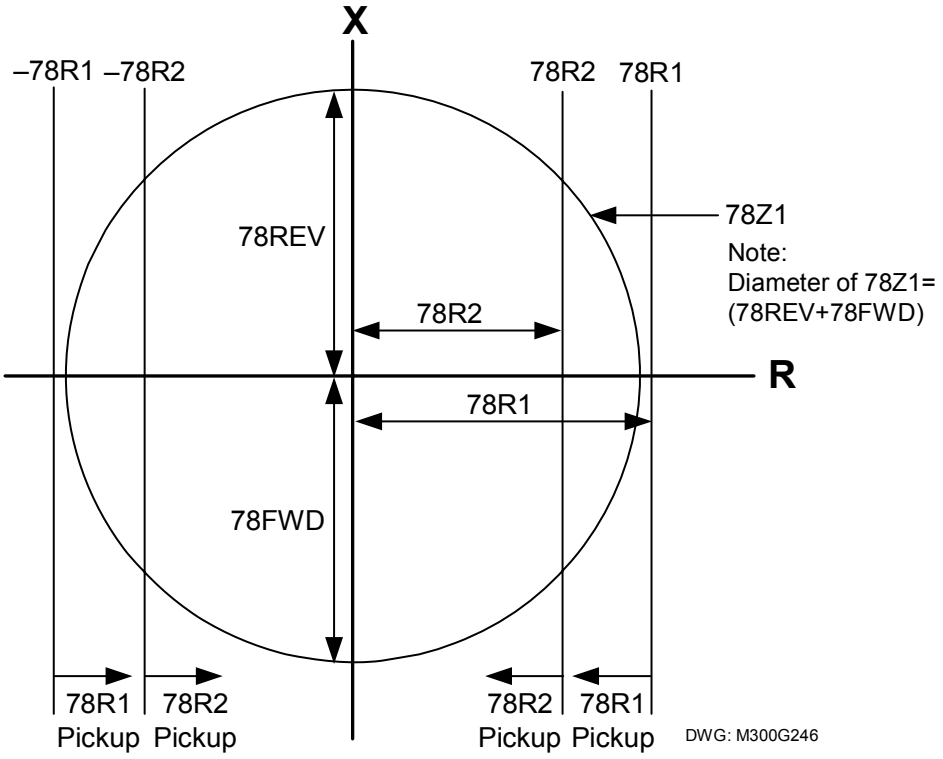

Figure 2.51: Double Blinder Scheme Operating Characteristics

The double blinder scheme, shown in Figure 2.51, consists of mho element 78Z1 and two blinder pairs: outer resistance blinder 78R1 and inner resistance blinder 78R2. This scheme uses timer 78D as part of its logic to detect out-of-step conditions. The scheme declares an out-of-step condition if the positive-sequence impedance stays between the two blinders for more than 78D seconds and advances further inside the inner blinder. The logic issues an out-of-step trip once an out-of-step condition is established and the positive-sequence impedance exits the mho circle.

If the relay detects an out-of-step condition, it asserts the following Relay Word bits:

- Relay Word bit SWING picks up when the positive-sequence impedance stays between the outer and inner blinders for more than 78D seconds (78R1 asserts, mho element 78Z1 may or may not assert).
- Relay Word bit OOS picks up when the impedance trajectory advances further inside the inner blinder (78R1, 78R2, and mho element 78Z1 assert).
- At the time the impedance trajectory exits the mho circle, the rising-edge triggered timer with 78TD pickup delay and 78TDURD dropout delay starts timing. Relay Word bit OOST remains picked up for 78TDURD seconds after pickup delay time 78TD expires.

The double blinder scheme distinguishes between short circuit faults and out-of-step conditions by monitoring the length of time that the impedance trajectory stays between the two blinders. During short circuit faults, the impedance either moves inside the inner blinder or goes through the two blinders almost instantaneously so the 78D does not time out. Either case prevents the out-of-step element from picking up.

Figure 2.52 shows the logic diagram for the double blinder scheme.

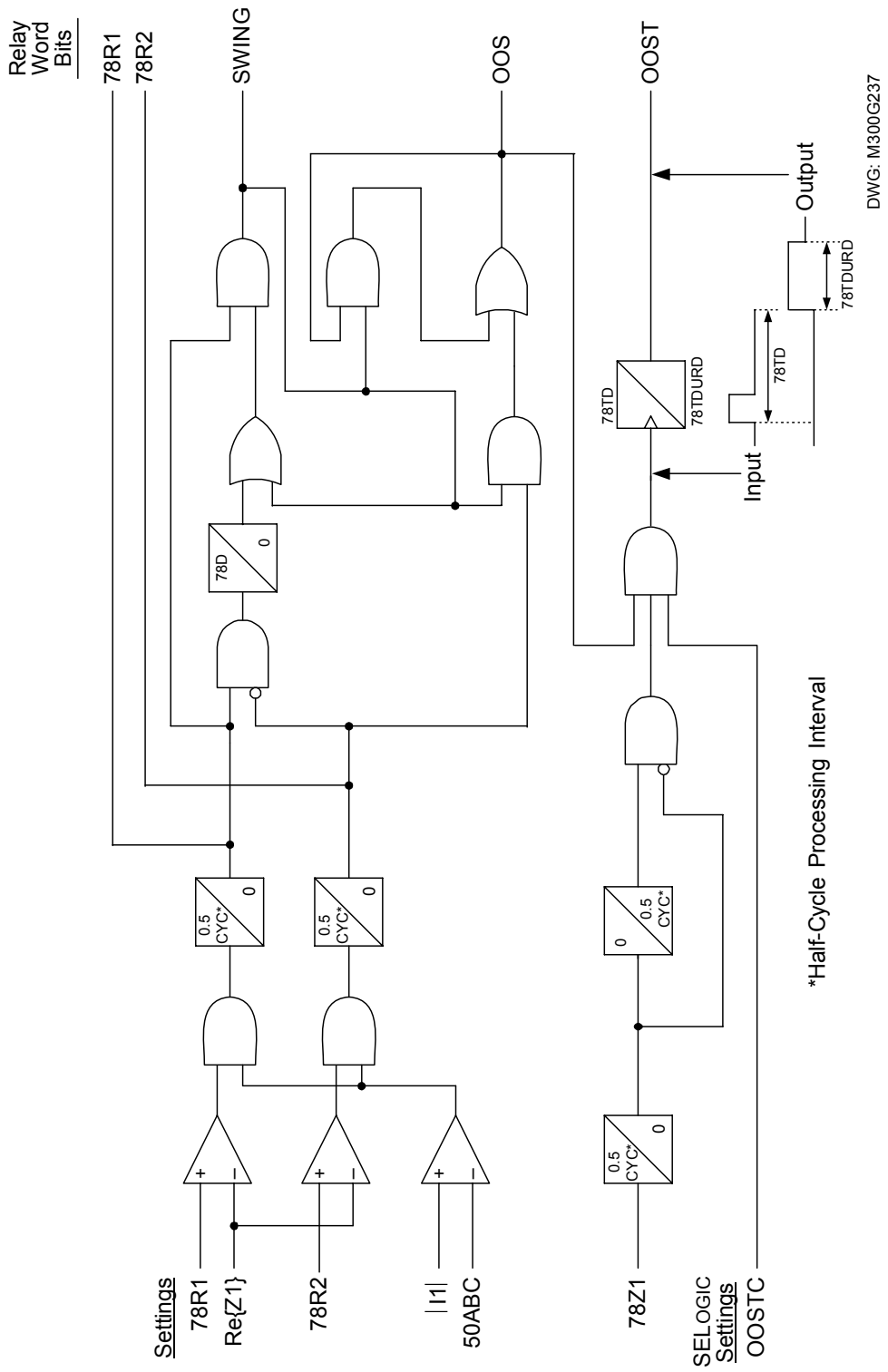

Figure 2.52: Double Blinder Scheme Logic Diagram

Settings Descriptions

Enable Out-of-Step Protection (1B, 2B, N)	E78 = 2B

Set E78 = either 1B or 2B to enable out-of-step protection elements. If out-of-step protection is not required, set E78 = N. E78 = 2B requires the following entries:

Forward Reach Reactance (0.1–100.0 Ohms)	78FWD = 8.0
Reverse Reach Reactance (0.1–100.0 Ohms)	78REV = 8.0
Outer Resistance Blinder (0.2–100.0 Ohms)	78R1 = 6.0
Inner Resistance Blinder (0.1–50.0 Ohms)	78R2 = 6.0
Out-of-Step Delay (0.00–1.00 second)	78D = 0.05
Out-of-Step Trip Delay (0.00–1.00 second)	78TD = 0.00
Out-of-Step Trip Duration (0.00–5.00 second)	78TDURD = 3.00
Positive-Sequence Current Supervision (0.25–30.00 A)	50ABC = 0.25
78 Element Torque Control (SELOGIC control equation)	OOSTC = 1

Notes: The values indicated above are default settings for a 5 A relay. For a 1 A relay multiply ohms by five and divide amperes by five.

The sum of the forward and reverse reaches (the diameter of the mho circle) has to be 100 ohms or less for a 5 A relay and 500 ohms or less for a 1 A relay.

Set the inner blinder (78R2) so that its setting is greater than or equal to five percent of either the forward or the reverse reach, whichever is greater.

The 78 Element Torque Control SELOGIC control equation OOSTC has a default setting of one. If this value is left at one, the out-of-step element will not be controlled by any other conditions external to the element. However, users can block operation of the 78 element for certain conditions, such as the presence of excessive negative-sequence currents, by setting OOSTC to !46Q1. Refer to ***Section 4: SELOGIC Control Equations*** for a detailed discussion of SELOGIC control equations.

The scheme includes positive-sequence current supervision setting 50ABC, which has a setting range of 0.25–30.00 A for 5 A relays and 0.05–6.00 A for 1 A relays. Normally, a setting of 0.25 A for 5 A relays is adequate for most applications. However, a higher setting can be applied based on minimum expected swing currents. Note that the positive-sequence current levels below the 50ABC setting will block the out-of-step function.

The trip delay timer also has an adjustable dropout delay 78TDURD (Trip Duration). If Relay Word bit OOST is configured to operate an output contact directly instead of being routed through the common trip logic, set 78TDURD as best fits your application. The default setting for 78TDURD is three seconds, but it can be set at zero seconds if OOST is integrated into the overall trip logic used by other elements since the common trip logic has TDURD, an identical timer. Refer to ***Section 4: SELOGIC Control Equations*** for details regarding common trip logic.

The inner resistance blinder must be inside the mho circle while the outer resistance blinder should be outside the mho circle for the logic to operate correctly.

Relay Word Bits

Relay Word Bit	Function Description	Typical Applications
78R1	Outer Resistance Blinder Pickup	Event Triggering, SER Triggering, Testing
78R2	Inner Resistance Blinder Pickup	Event Triggering, SER Triggering, Testing
78Z1	Mho Element Pickup	Event Triggering, SER Triggering, Testing
SWING	Swing Condition Detected	Event Triggering, SER Triggering, Testing
OOS	Out-of-Step Condition Detected	Event Triggering, SER Triggering, Testing
OOST	Out-of-Step Tripping	Event Triggering, SER Triggering, Testing, Tripping

Settings Calculation

Information Needed

- Generator transient reactance, X'_d in secondary ohms.
- Generator step-up transformer impedance in secondary ohms.
- Impedance of line or lines beyond the generator step-up transformers, if needed.

Convert all impedances to generator base kV.

Recommendations

Figure 2.53 shows the elements set per the following recommendations.

The out-of-step protection zone, which is limited by mho element 78Z1, should extend from the generator neutral to the high-side bushings of the generator step-up transformer. Normally, the forward reach 78FWD of the mho element is set at 2–3 times the generator transient reactance X'_d and its reverse reach 78REV at 1.5–2 times the transformer reactance, XT. These settings for the forward and the reverse reach will provide adequate coverage plus some margin. Refer to Figure 2.53 for details.

Set the inner blinder 78R2 to detect all out-of-step conditions. To do this, set the inner blinder so that the equivalent machine angles α, shown in Figure 2.53, is approximately 120 degrees. A separation angle of 120 degrees or greater between two sources will generally result in loss of synchronism.

The outer blinder 78R1 and out-of-step timer 78D should be set to satisfy the following:

- The outer blinder should not assert on maximum load.
- The outer blinder should lie outside the mho circle to satisfy the relay logic.
- The outer blinder should separate from the inner blinder far enough to ensure that the 78D timer accurately times the out-of-step slip cycle.

The SEL-300G processes the out-of-step logic every one-half cycle of the system frequency. To ensure that the relay times the out-of-step slip frequency accurately, the outer and inner blinders must be separated appropriately. For example, assume that the highest out-of-step frequency encountered is five slip cycles per second, which translates to 30 degrees per cycle (60 Hz). Set the blinders with a 70-degree separation. This separation translates to a positive-sequence impedance travel time of 2.3 cycles between the two blinders, which should provide adequate timing accuracy. Set the 78D timer at approximately 0.034 seconds (two cycles), which ensures that 78D will pickup for swings traveling at 30 degrees per cycle or less.

The out-of-step slip frequency is a system-specific value. A transient stability study normally determines this variable and therefore the double blinder settings.

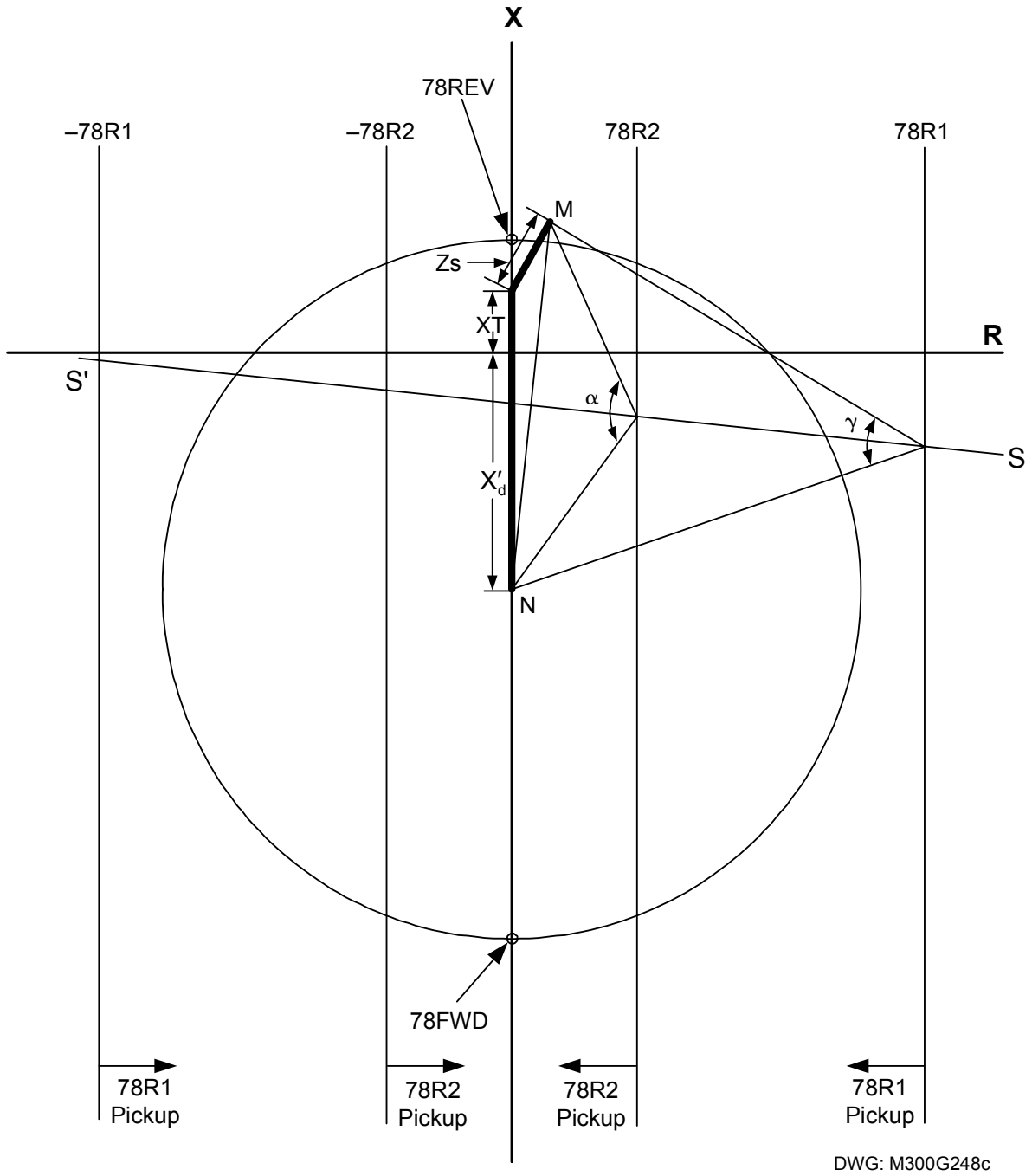

78FWD:	Forward Reach	S-S':	Perpendicular Bisector of M-N
78REV:	Reverse Reach	α:	Angle of Separation Between Generator and System Measured at 78R2
X'_d:	Generator Transient Reactance	γ:	Angle of Separation Between Generator and System Measured at 78R1
XT:	Transformer Reactance		
Zs:	System Impedance		
M-N:	Total Impedance Between Generator and System		

Figure 2.53: Double Blinder Typical Settings

FREQUENCY PROTECTION

Element Description

Functional Description

The SEL-300G provides six steps of over/underfrequency elements. Each element can operate as an overfrequency or an underfrequency element, depending on its pickup setting. If the element pickup setting is less than the nominal machine frequency setting, FNOM, the element operates as an underfrequency element, picking up if measured frequency is less than the setpoint. If the pickup setting is greater than FNOM, the element operates as an overfrequency element, picking up if measured frequency is greater than the setpoint.

The SEL-300G determines system frequency using the A-phase voltage. All frequency elements are disabled if any phase voltage is less than a settable voltage, 27B81P. Use the relay frequency elements for simple abnormal frequency protection. In turbine prime mover applications, consider using the off-nominal frequency operating time accumulator function for additional protection.

Setting Descriptions

Enable Frequency Elements (N, 1–6) E81 = 2

Set E81 to enable up to six over/underfrequency elements. When E81 = N, the frequency elements are disabled and their settings are hidden and do not need to be entered.

81 ELEMENTS

Phase Undervoltage Block (20.00–150.00 V)	27B81P = 20.00
Level 1 Pickup (OFF, 20.00–70.00 Hz)	81D1P = 59.10
Level 1 Time Delay (0.03–400.00 s)	81D1D = 0.03
Level 2 Pickup (OFF, 20.00–70.00 Hz)	81D2P = 62.00
Level 2 Time Delay (0.03–400.00 s)	81D2D = 0.03
Level 3 Pickup (OFF, 20.00–70.00 Hz)	81D3P = OFF
Level 3 Time Delay (0.03–400.00 s)	81D3D = 0.03
Level 4 Pickup (OFF, 20.00–70.00 Hz)	81D4P = OFF
Level 4 Time Delay (0.03–400.00 s)	81D4D = 0.03
Level 5 Pickup (OFF, 20.00–70.00 Hz)	81D5P = OFF
Level 5 Time Delay (0.03–400.00 s)	81D5D = 0.03
Level 6 Pickup (OFF, 20.00–70.00 Hz)	81D6P = OFF
Level 6 Time Delay (0.03–400.00 s)	81D6D = 0.03

The frequency elements are disabled while any phase voltage is less than the 27B81P setting. In the settings shown above, two frequency elements are enabled. 81D1P is set below the nominal system frequency of 60 Hz, so operates as an underfrequency element. 81D2P is set above 60 Hz, so operates as an overfrequency element. Each enabled element also includes a settable definite-time pickup delay.

Relay Word Bits

Relay Word Bit	Function Description	Typical Applications
81D1	Level 1 Frequency Element Pickup	Testing
81D1T	Level 1 Frequency Element With Time Delay	Tripping, Indication, SER Triggering
81D2	Level 2 Frequency Element Pickup	Testing
81D2T	Level 2 Frequency Element With Time Delay	Tripping, Indication, SER Triggering
81D3	Level 3 Frequency Element Pickup	Testing
81D3T	Level 3 Frequency Element With Time Delay	Tripping, Indication, SER Triggering
81D4	Level 4 Frequency Element Pickup	Testing
81D4T	Level 4 Frequency Element With Time Delay	Tripping, Indication, SER Triggering
81D5	Level 5 Frequency Element Pickup	Testing
81D5T	Level 5 Frequency Element With Time Delay	Tripping, Indication, SER Triggering
81D6	Level 6 Frequency Element Pickup	Testing
81D6T	Level 6 Frequency Element With Time Delay	Tripping, Indication, SER Triggering
27B81	Phase Undervoltage for Frequency Element Blocking	Indication, Event Triggering, Testing

Note: Instantaneous frequency element Relay Word bits 81D1–81D6 should not be used for applications other than testing.

Frequency Element Setting Calculation

Information Needed

- Required or desired abnormal frequency protection tripping frequencies and delays
- Generator over/underfrequency shedding frequencies and delays

Recommendations

Enable the required number of over/underfrequency elements for your application. Your generator prime mover manufacturer can provide abnormal frequency tripping guidelines to protect the generator and prime mover. Your local system coordinating council may have published underfrequency load shedding requirements. A 20V setting for 27B81P provides frequency element operation over the widest range of system and generator voltages.

Underfrequency Tripping

Because frequency-based trips occur due to system phenomena rather than generator problems, tripping is generally applied to the generator main breaker only. In this way, the generator can be quickly resynchronized once the system condition causing the frequency disturbance has been corrected. Refer to ***Section 4: SELOGIC Control Equations*** for more detail and examples of tripping SELOGIC control equations.

Element Operating Characteristics

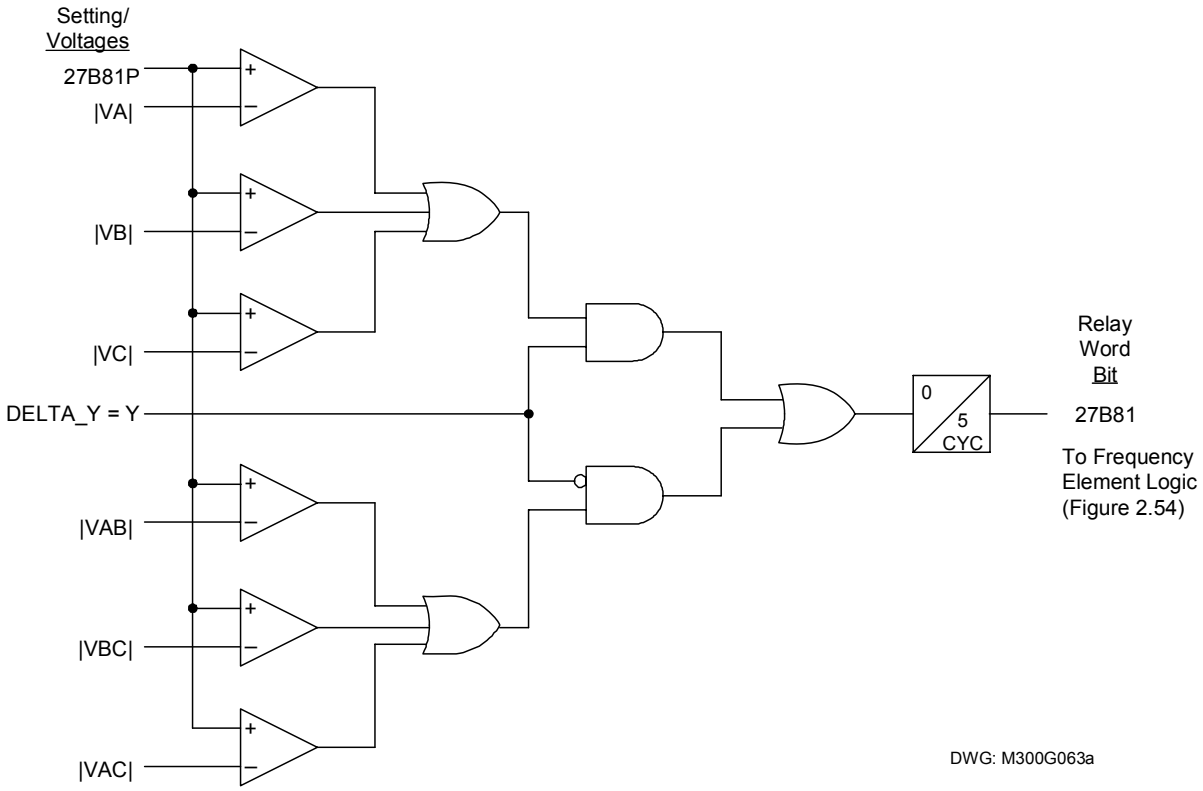

Figure 2.54: Frequency Element Voltage Supervision Logic

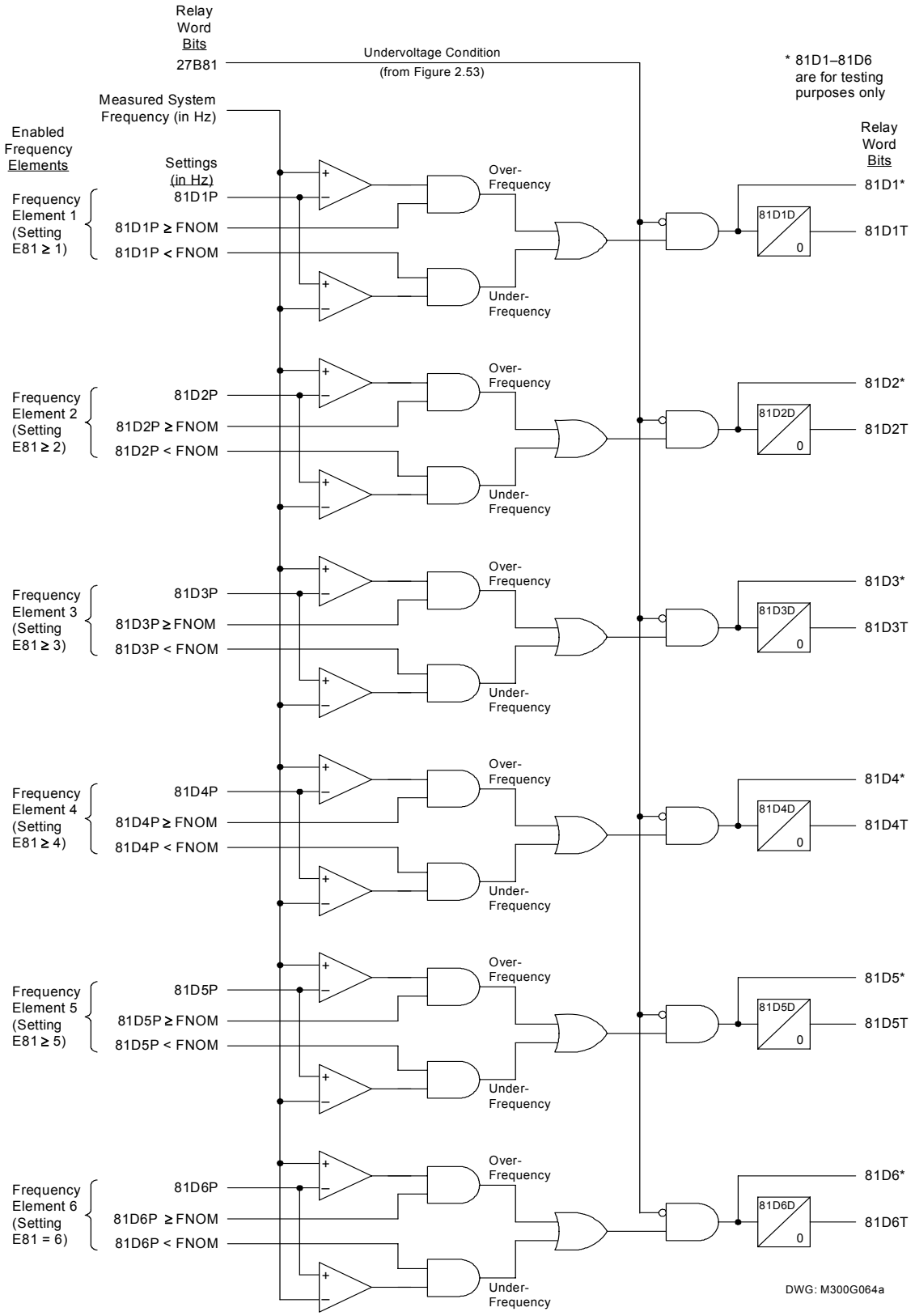

Figure 2.55: Frequency Element Logic

OFF-FREQUENCY ACCUMULATORS

Element Description

Functional Description

When steam turbine prime movers operate at other than design speed, vibration can cause cumulative metal fatigue in the turbine blades. Eventually, this fatigue can lead to premature and catastrophic turbine blade failure. For steam turbine prime mover applications, the SEL-300G records the total time of operation of the generator at off-nominal frequencies in up to six frequency bands. This function satisfies the requirements of the *IEEE C37.106: 1987 Guide For Abnormal Frequency Protection for Power Generating Plants, Steam Turbine Protection Scheme 1*.

When the generator is online (SELOGIC control equation ONLINE = logical 1), if the frequency is within a time-accumulator band, the relay asserts an alarm bit and starts the 62ACC timer for that band. If the frequency remains within the band for greater than 62ACC seconds, the relay begins adding time to that accumulator band timer. If the total time of operation within a particular accumulator band exceeds the limit setting for that band, the relay asserts a tripping bit.

The accumulator values are nonvolatile and are retained through relay power-off cycles. The accumulator values may be viewed or reset using the relay serial port PROFILE command.

Setting Descriptions

Enable Abnormal Frequency Scheme (N, 1–6) E81AC = 6

Set E81AC = 1–6 to enable the abnormal frequency operating time-accumulator function. If this function is not required, set E81AC = N. When E81AC = N, the function is inactive and the settings are hidden and do not need to be entered.

Upper Frequency Limit of Band 1 (20.0–70.0 Hz) UBND1 = 59.5

Lower Frequency Limit of Band 1 (20.0–70.0 Hz) LBND1 = 58.5

The UBND1 and LBND1 settings define the upper and lower frequency limits of the first accumulator band. UBND1 is typically less than nominal system frequency. LBND1 must be less than UBND1.

Band 1 Accumulator Limit Time (0.01–6000.00 s) TBND1 = 5000.00

Settings TBND1 through TBND6 define the total permissible time of operation of the generator and turbine within each frequency band. Once this limit is exceeded, the relay asserts the tripping Relay Word bit for the particular band.

Lower Frequency Limit of Band 2 (20.0–70.0 Hz) LBND2 = 57.9

The lower limit of accumulator Band 2 is defined by the LBND2 setting. The relay automatically uses LBND1 as the upper limit of Band 2. Subsequent accumulator bands are defined in the same way.

Band 2 Accumulator Limit Time (0.01–6000.00 s) TBND2 = 600.00

Lower Frequency Limit of Band 3 (20.0–70.0 Hz) LBND3 = 57.4

Band 3 Accumulator Limit Time (0.01–6000.00 s) TBND3 = 120.00

Lower Frequency Limit of Band 4 (20.0–70.0 Hz) LBND4 = 56.9

Band 4 Accumulator Limit Time (0.01–6000.00 s) TBND4 = 12.00

Lower Frequency Limit of Band 5 (20.0–70.0 Hz)	LBND5 = 56.5
Band 5 Accumulator Limit Time (0.01–6000.00 s)	TBND5 = 2.00
Lower Frequency Limit of Band 6 (20.0–70.0 Hz)	LBND6 = 56.0
Band 6 Accumulator Limit Time (0.01–6000.00 s)	TBND6 = 0.65
Accumulator Time-Delayed Pickup (00.00–400.00 s)	62ACC = 0.16

System frequency must stabilize within a frequency band for 62ACC seconds before time accumulation starts. Ten cycles or 0.16 seconds is the setting recommended by the IEEE standard.

Abnormal Frequency Element Control Equation

ONLINE =!27B81*!3PO

Off-frequency operating time is only accumulated when the ONLINE SELOGIC control equation result is logical 1. We do not wish to accumulate time during generator startup or when the generator frequency cannot be accurately determined due to low voltage. With the default setting, off-frequency operating time is accumulated when no phase voltage is below the 27B81P setting and the generator breaker is not open.

Relay Word Bits

Relay Word Bit	Function Description	Typical Applications
BND1A	Frequency Band 1 Alarm	Indication, Event Triggering, SER Triggering, Testing
BND1T	Frequency Band 1 Trip	Tripping, Indication, SER Triggering
BND2A	Frequency Band 2 Alarm	Indication, Event Triggering, SER Triggering, Testing
BND2T	Frequency Band 2 Trip	Tripping, Indication, SER Triggering
BND3A	Frequency Band 3 Alarm	Indication, Event Triggering, SER Triggering, Testing
BND3T	Frequency Band 3 Trip	Tripping, Indication, SER Triggering
BND4A	Frequency Band 4 Alarm	Indication, Event Triggering, SER Triggering, Testing
BND4T	Frequency Band 4 Trip	Tripping, Indication, SER Triggering
BND5A	Frequency Band 5 Alarm	Indication, Event Triggering, SER Triggering, Testing
BND5T	Frequency Band 5 Trip	Tripping, Indication, SER Triggering
BND6A	Frequency Band 6 Alarm	Indication, Event Triggering, SER Triggering, Testing
BND6T	Frequency Band 6 Trip	Tripping, Indication, SER Triggering
BNDA	Any Frequency Band Alarm	Indication, Event Triggering, SER Triggering, Testing
BNDT	Any Frequency Band Trip	Tripping, Indication, SER Triggering

Abnormal Frequency Protection Setting Calculation

Information Needed

Turbine Manufacturer Abnormal Operating Frequency Protection Recommendations

Recommendations

Steam turbine manufacturers can provide documentation showing turbine operating time limitations during abnormal frequency. This documentation should show continuous operation at nominal frequency, an area of restricted time of operation, and an area of prohibited time of operation. Define accumulator frequency bands and assign times to those bands that prevent the generator from operating in the restricted area. Figure 2.56 shows an example, with settings shown.

Abnormal Frequency Tripping

Consult the generator and prime mover manufacturers to determine the need or ability to trip the generator when the set time accumulation is reached. Refer to ***Section 4: SELOGIC Control Equations*** for more detail and examples of tripping SELOGIC control equations.

Element Operating Characteristics

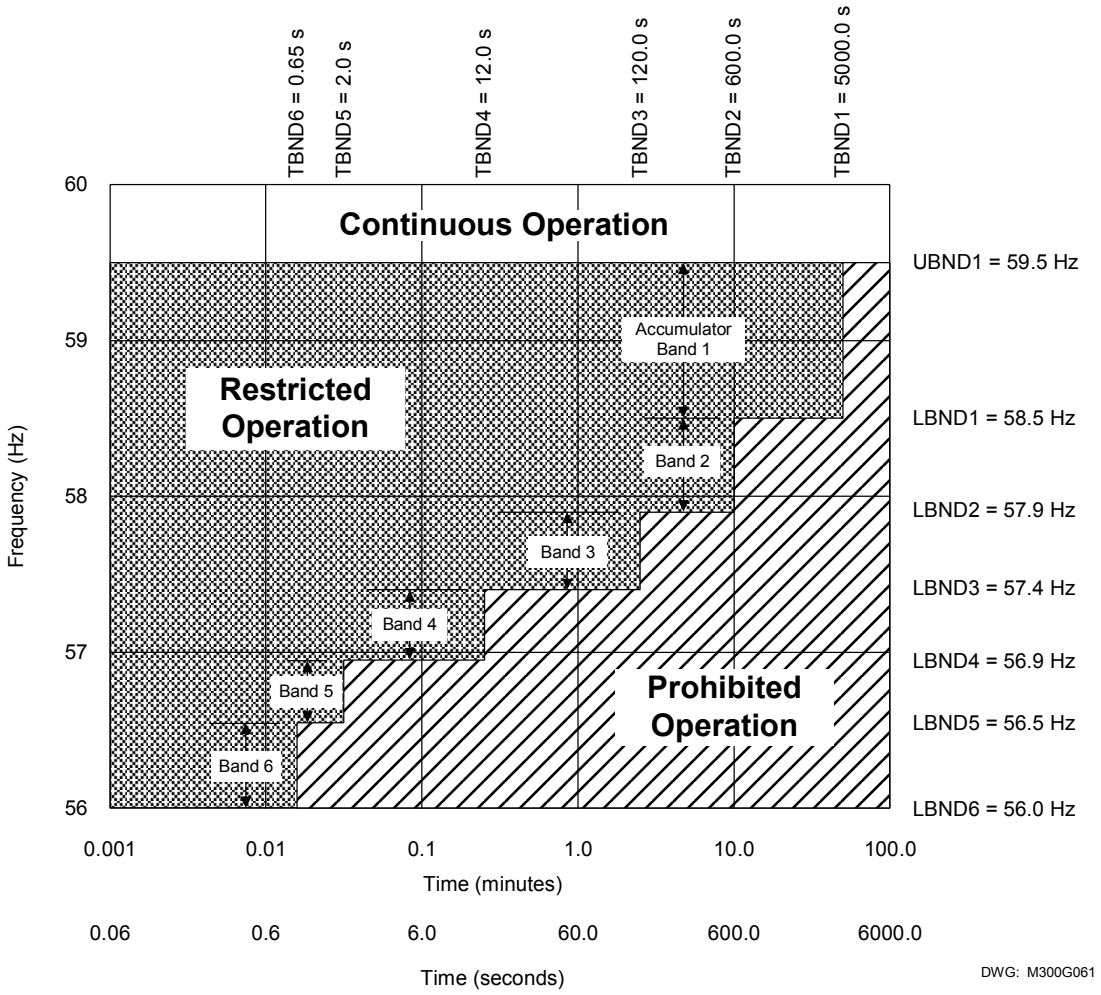

Figure 2.56: Example Turbine Operating Limitations During Abnormal Frequency

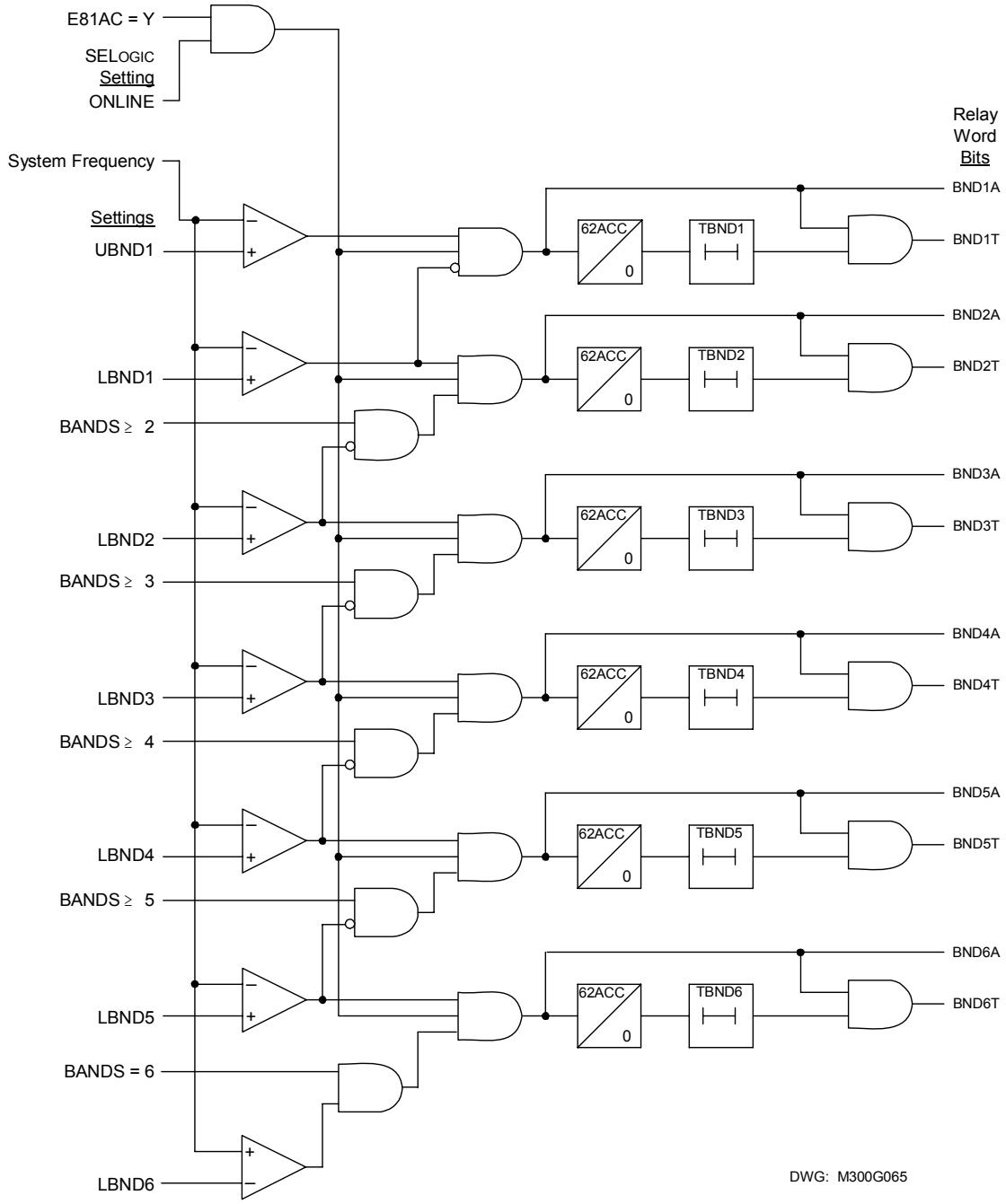

Figure 2.57: Abnormal Frequency Protection Logic Diagram

RTD-BASED PROTECTION (MODELS COMPATIBLE WITH SEL-2600 SERIES RTD MODULE)

Element Description

Functional Description

The SEL-300G1/300G2/300G3 Relays optionally include compatibility with the SEL-2600 Series RTD Module (refer to Table 1.2 for Model Number detail). Up to 12 RTDs can be connected to the SEL-2600 series. Use a fiber-optic cable and a transceiver (SEL part number C805Z010VVX0003 [3 meters]—refer to the Model Option Table for additional cable choices—and SEL-2800, respectively) to transmit the RTD data to the SEL-300G (See Figure 1.4 for the detail). The EIA-232 port used must be set for SEL protocol and a baud rate of 2400.

The SEL-300G provides temperature alarms and trips using the RTD temperature measurements and the alarm and trip temperature settings. The relay includes RTD voting feature for the winding and the bearing trip elements. In addition, the relay provides two ways to bias the trip temperature thresholds for the winding RTDs.

Setting Descriptions

RTD Configuration Settings

Setting Prompt	Setting Range	Setting Name = Factory Default
RTD Input Option	EXT, NONE	RTDOPT = NONE
Temperature Preference Setting	C, F	TMPREF = F

When RTDs are not used, set the RTD Input Option setting equal to NONE. When RTDs are connected to the inputs of the SEL-2600 series, set the RTD Input Option setting equal to EXT.

The Temperature Preference Setting allows you to configure the RTD temperature trip and alarm settings and temperature reporting functions in your preferred units:

degrees Celsius or degrees Fahrenheit.

The relay automatically hides the Temperature Preference setting and all other settings associated with the RTD inputs if you set RTDOPT equal to NONE.

RTD Location Settings

Setting Prompt	Setting Range	Setting Name = Factory Default
RTD Location	WDG, BRG, AMB, OTH, NONE	RTD1LOC = BRG
RTD Location	WDG, BRG, AMB, OTH, NONE	RTD2LOC = BRG
RTD Location	WDG, BRG, AMB, OTH, NONE	RTD3LOC = BRG
RTD Location	WDG, BRG, AMB, OTH, NONE	RTD4LOC = BRG
RTD Location	WDG, BRG, AMB, OTH, NONE	RTD5LOC = WDG
RTD Location	WDG, BRG, AMB, OTH, NONE	RTD6LOC = WDG
RTD Location	WDG, BRG, AMB, OTH, NONE	RTD7LOC = WDG
RTD Location	WDG, BRG, AMB, OTH, NONE	RTD8LOC = WDG
RTD Location	WDG, BRG, AMB, OTH, NONE	RTD9LOC = WDG

Setting Prompt	Setting Range	Setting Name = Factory Default
RTD Location	WDG, BRG, AMB, OTH, NONE	RTD10LOC = WDG
RTD Location	WDG, BRG, AMB, OTH, NONE	RTD11LOC = AMB
RTD Location	WDG, BRG, AMB, OTH, NONE	RTD12LOC = OTH

The relay allows you to define the location of each monitored RTD independently using the RTD Location settings.

Define the RTD Location settings using the following suggestions:

- If an RTD is not connected to an input or has failed in place and will not be replaced, set RTD Location for that input equal to NONE.
- For RTDs embedded in generator stator windings, set RTD Location equal to WDG.
- For inputs connected to RTDs measuring bearing race temperature, set RTD Location equal to BRG.
- For the input connected to an RTD measuring ambient generator cooling air temperature, set RTD Location equal to AMB. Only one ambient temperature RTD is allowed.
- For inputs connected to monitor temperatures of other apparatus, set RTD Location equal to OTH.

RTD Type Settings

Setting Prompt	Setting Range	Setting Name = Factory Default
RTD Type	PT100, NI100, NI120, CU10	RTD1TY = PT100
RTD Type	PT100, NI100, NI120, CU10	RTD2TY = PT100
RTD Type	PT100, NI100, NI120, CU10	RTD3TY = PT100
RTD Type	PT100, NI100, NI120, CU10	RTD4TY = PT100
RTD Type	PT100, NI100, NI120, CU10	RTD5TY = PT100
RTD Type	PT100, NI100, NI120, CU10	RTD6TY = PT100
RTD Type	PT100, NI100, NI120, CU10	RTD7TY = PT100
RTD Type	PT100, NI100, NI120, CU10	RTD8TY = PT100
RTD Type	PT100, NI100, NI120, CU10	RTD9TY = PT100
RTD Type	PT100, NI100, NI120, CU10	RTD10TY = PT100
RTD Type	PT100, NI100, NI120, CU10	RTD11TY = PT100
RTD Type	PT100, NI100, NI120, CU10	RTD12TY = PT100

The relay allows you to define the type of each monitored RTD independently using the RTD Type settings.

If an RTD Location setting is equal to NONE, the relay does not request that an RTD Type setting be entered for that input.

The four available RTD types (Table 2.5 lists RTD resistance versus temperature for the RTD) are:

- 100-ohm platinum (PT100)
- 100-ohm nickel (NI100)
- 120-ohm nickel (NI120)
- 10-ohm copper (CU10)

RTD Alarms & Trip Temperature Settings

Note: When the Temperature Preference setting TEMPREF equals C, the trip and alarm temperature setting ranges below are OFF, 0°–250°C.

Setting Prompt	Setting Range	Setting Name = Factory Default
RTD Trip Temperature	OFF, 32°–482°F	TRTMP1 = OFF
RTD Alarm Temperature	OFF, 32°–482°F	ALTMP1 = OFF
RTD Trip Temperature	OFF, 32°–482°F	TRTMP2 = OFF
RTD Alarm Temperature	OFF, 32°–482°F	ALTMP2 = OFF
RTD Trip Temperature	OFF, 32°–482°F	TRTMP3 = OFF
RTD Alarm Temperature	OFF, 32°–482°F	ALTMP3 = OFF
RTD Trip Temperature	OFF, 32°–482°F	TRTMP4 = OFF
RTD Alarm Temperature	OFF, 32°–482°F	ALTMP4 = OFF
RTD Trip Temperature	OFF, 32°–482°F	TRTMP5 = OFF
RTD Alarm Temperature	OFF, 32°–482°F	ALTMP5 = OFF
RTD Trip Temperature	OFF, 32°–482°F	TRTMP6 = OFF
RTD Alarm Temperature	OFF, 32°–482°F	ALTMP6 = OFF
RTD Trip Temperature	OFF, 32°–482°F	TRTMP7 = OFF
RTD Alarm Temperature	OFF, 32°–482°F	ALTMP7 = OFF
RTD Trip Temperature	OFF, 32°–482°F	TRTMP8 = OFF
RTD Alarm Temperature	OFF, 32°–482°F	ALTMP8 = OFF
RTD Trip Temperature	OFF, 32°–482°F	TRTMP9 = OFF
RTD Alarm Temperature	OFF, 32°–482°F	ALTMP9 = OFF
RTD Trip Temperature	OFF, 32°–482°F	TRTMP10 = OFF
RTD Alarm Temperature	OFF, 32°–482°F	ALTMP10 = OFF
RTD Trip Temperature	OFF, 32°–482°F	TRTMP11 = OFF
RTD Alarm Temperature	OFF, 32°–482°F	ALTMP11 = OFF
RTD Trip Temperature	OFF, 32°–482°F	TRTMP12 = OFF
RTD Alarm Temperature	OFF, 32°–482°F	ALTMP12 = OFF
Enable Winding Trip Voting	Y, N	EWDGV = N
Enable Bearing Trip Voting	Y, N	EBRGV = N

Setting Prompt	Setting Range	Setting Name = Factory Default
RTD Biasing	AMB, LOAD, NONE	RTDBIAS = NONE
RTD Bias Differential Temperature	0°–45°F (0°–25°C)	TMPK = 9°F
Overload Bias Limit	1.00–2.00 per unit Amp.	BLMT = 2.00

The SEL-300G provides temperature alarms and trips using the RTD temperature measurements and the alarm and trip temperature settings. The temperature setting range is dependent on the Temperature Preference setting so you can enter your alarm and trip temperatures in degrees Celsius or degrees Fahrenheit.

The relay issues a winding temperature alarm if any of the healthy winding RTDs (RTD Location setting equals WDG) indicate a temperature greater than its RTD Alarm Temperature setting. The relay issues a winding temperature trip if one or two of the healthy winding RTDs indicate a temperature greater than their RTD Trip Temperature settings. Two winding RTDs must indicate excessive temperature when the Enable Winding Trip Voting setting equals Y. Only one excessive temperature indication is required if the Winding Trip Voting is not enabled.

The alarm and trip temperature settings for Bearing, Ambient, and Other RTD types function similarly except that trip voting is not available for Ambient and Other RTDs.

To disable any of the temperature alarm or trip functions, set the appropriate temperature setting to OFF.

Only healthy RTDs can contribute temperatures to the alarm and trip functions. The relay includes specific logic to indicate if RTD leads are shorted or open. Also, failure of the SEL-2600 series or the fiber-optic connection results in RTD fault alarm in the SEL-300G relay.

The relay offers two options to bias the RTD temperature thresholds.

1. When you have connected an ambient temperature sensing RTD and set the trip and/or alarm temperatures for one or more winding (or bearing) RTDs, the relay gives you the option to bias the thresholds by the ambient temperature. When you enable RTD biasing by the Ambient, the relay automatically reduces the RTD trip and alarm temperature thresholds by 1°C for each degree rise in ambient temperature above 40°C.

2. You also have an option to bias the trip and alarm temperature thresholds by generator load current. When you enable RTD biasing by the Load, the relay automatically reduces the winding RTD trip and alarm thresholds when the load current exceeds Nominal Current of the generator.

The following equation is used to compute the trip thresholds (alarm thresholds work similarly):

$$\text{Trip Threshold} = \text{TRTMPn} + \text{TMPK}\left[\left(\frac{1}{I_{pu}}\right)^2 - 1\right]$$

where

TRTMP*n* = Trip Temperature Setting of Winding RTD*n*
TMPK = RTD Bias Differential Temperature setting

$$I_{pu} = \frac{\text{Positive Sequence Load Current}}{\text{Nominal Current, INOM}}$$

(I_{pu} is limited to $1 \le I_{pu} \le$ BLMT, Overload Bias Limit setting)

Figure 2.58 illustrates the Load Current Biased RTD trip characteristic with BLMT (Overload Bias Limit) set to 2.00 pu Amps.

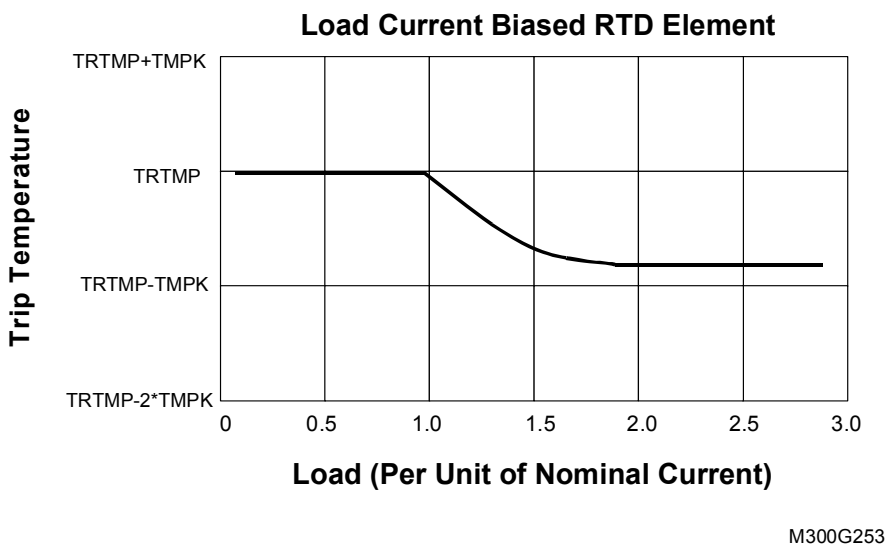

Figure 2.58: Winding RTD Trip Characteristics with BLMT = 2.00

Table 2.5: RTD Resistance vs. Temperature

Temp (°F)	Temp (°C)	100-Ohm Platinum	120-Ohm Nickel	100-Ohm Nickel	10-Ohm Copper
–58	–50.00	80.31	86.17	74.30	7.10
–40	–40.00	84.27	92.76	79.10	7.49
–22	–30.00	88.22	99.41	84.20	7.88
–4	–20.00	92.16	106.15	89.30	8.26
14	–10.00	96.09	113.00	94.60	8.65
32	0.00	100.00	120.00	100.00	9.04
50	10.00	103.90	127.17	105.60	9.42
68	20.00	107.79	134.52	111.20	9.81
86	30.00	111.67	142.06	117.10	10.19
104	40.00	115.54	149.79	123.00	10.58
122	50.00	119.39	157.74	129.10	10.97
140	60.00	123.24	165.90	135.30	11.35
158	70.00	127.07	174.25	141.70	11.74
176	80.00	130.89	182.84	148.30	12.12
194	90.00	134.70	191.64	154.90	12.51
212	100.00	138.50	200.64	161.80	12.90
230	110.00	142.29	209.85	168.80	13.28
248	120.00	146.06	219.29	176.00	13.67
266	130.00	149.83	228.96	183.30	14.06
284	140.00	153.58	238.85	190.90	14.44
302	150.00	157.32	248.95	198.70	14.83
320	160.00	161.05	259.30	206.60	15.22
338	170.00	164.77	269.91	214.80	15.61
356	180.00	168.47	280.77	223.20	16.00
374	190.00	172.17	291.96	231.80	16.39
392	200.00	175.85	303.46	240.70	16.78
410	210.00	179.15	315.31	249.80	17.17
428	220.00	183.17	327.54	259.20	17.56
446	230.00	186.82	340.14	268.90	17.95
464	240.00	190.45	353.14	278.90	18.34
482	250.00	194.08	366.53	289.10	18.73

Relay Word Bits

Relay Word Bit	Function Description	Typical Application
WDGTRIP	Winding Temperature Trip (RTD voting and/or biasing applies if set)	Tripping, Indication, SER Triggering
WDGALRM	Winding Temperature Alarm (biasing applies if set)	Indication, SER Triggering
BRGTRIP	Bearing Temperature Trip (RTD voting and/or biasing applies if set)	Tripping, Indication, SER Triggering
BRGALRM	Bearing Temperature Alarm (biasing applies if set)	Indication, SER Triggering
AMBTRIP	Ambient Temperature Trip	Tripping, Indication, SER Triggering
AMBALRM	Ambient Temperature Alarm	Indication, SER Triggering
OTHTRIP	Other Temperature Trip	Tripping, Indication, SER Triggering
OTHALRM	Other Temperature Alarm	Indication, SER Triggering
RTD*n*AL (*n* = 1 to 12)	RTD*n* Temperature Alarm	Indication, Testing
RTD*n*TR (*n* = 1 to 12)	RTD*n* Temperature Trip	Indication, Testing
RTDFLT	RTD Fault, open/shorted RTD or no communication with the SEL-2600 series	Indication, SER Triggering
2600IN	Contact Input from the SEL-2600 series	General purpose control/indication

Note: The above Relay Word bits are not programmed for any action in the factory default settings. They must be added to appropriate SELOGIC control equations and SER settings for Tripping, Alarm, SER triggering, etc.

POLE OPEN LOGIC

Element Description

Functional Description

The SEL-300G pole open logic output Relay Word bit, 3PO, is logical 1 when the measured phase current and breaker auxiliary contact position agree that generator circuit breaker is open. The 3PO Relay Word bit is useful in event triggering, SER triggering, and other indication and control applications. Figure 2.59 illustrates the logic.

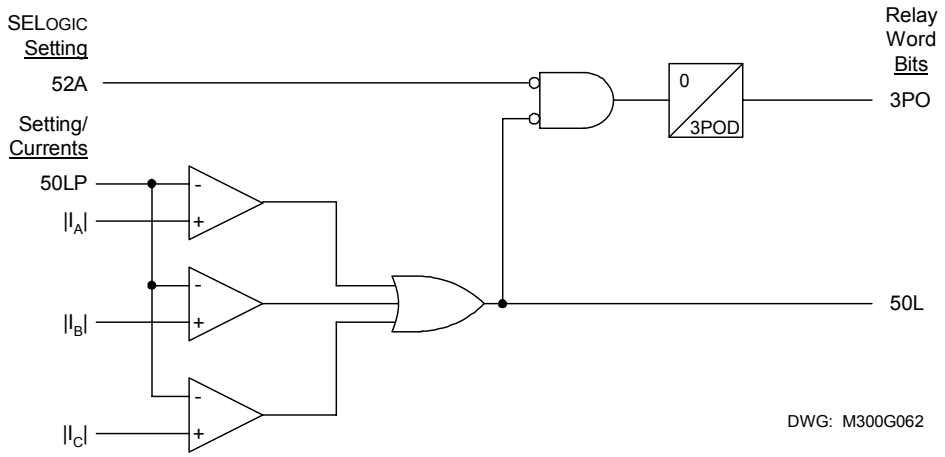

Figure 2.59: Pole Open Logic Diagram

Setting Descriptions

Load Detection Phase Pickup (OFF, 0.25–100.00 A, 5 A Model) (OFF, 0.05–20.00 A, 1 A Model)	50LP = 0.25
Three-Pole Open Time Delay (0.00–1.00 s)	3POD = 0.00

The 50LP setting defines the pickup setting for the 50L overcurrent element. The 3POD time-delay dropout setting defines the 3PO dropout delay.

Relay Word Bits

Relay Word Bit	Function Description	Typical Applications
50L	Sensitive Phase Overcurrent	Indication, Testing
3PO	Breaker Three-Pole Open Condition	Indication, SER Triggering

Pole Open Logic Setting Calculation

Recommendations

Set 50LP to its minimum value. When the generator current is extremely low, the relay will rely on the 52A input status to indicate breaker position. Set 3POD = 0 cycles unless your application requires a specific time-delayed dropout.

INADVERTENT ENERGIZATION PROTECTION

The SEL-300G Inadvertent Energization protection function is provided by the INAD SELOGIC control equation. Refer to ***Section 4: SELOGIC Control Equations*** for complete details and a setting example.

BREAKER FAILURE PROTECTION

In some protection topologies, the SEL-300G SELOGIC control equations and nondedicated overcurrent elements can provide breaker failure protection. Refer to ***Section 4: SELOGIC Control Equations*** for complete details and a setting example.

DIFFERENTIAL PROTECTION

Settings for the ground differential (87N) elements provided by relay Models 0300G0 and 0300G2 and the percentage restrained differential (87) elements provided by relay models 0300G1 and 0300G3 are described in ***Section 13: Differential Element Settings***.

SYNCHRONISM CHECKING

Settings for the optional synchronism checking function provided by relay models 0300G2 and 0300G3 are described in ***Section 4: SELOGIC Control Equations***.

TABLE OF CONTENTS

SECTION 3: AUXILIARY FUNCTION SETTINGS 3-1

Introduction 3-1
Demand Meter 3-1
Functional Description 3-1
Demand Ammeter Thresholds 3-5
Setting Descriptions 3-5
Relay Word Bits 3-6
Station DC Monitor 3-7
Element Description 3-7
Create Desired Logic for DC Under- and Overvoltage Alarming 3-8
Setting Group Selection Function 3-10
Active Setting Group Indication 3-10
Selecting the Active Setting Group 3-10
Operation of SELOGIC Control Equation Settings SS1 and SS2 3-10
Operation of Serial Port GROUP Command and Front-Panel GROUP Pushbutton 3-11
Relay Disabled Momentarily During Active Setting Group Change 3-11
Active Setting Group Switching Example 3-11
Active Setting Group Retained 3-15
Breaker Monitor Function 3-15
Breaker Monitor Setting Example 3-18
Optoisolated Input Debounce Timers 3-21
Input Debounce Timers 3-22
Input Functions 3-23
Factory Settings Example 3-23
SER Trigger Settings and Alias Settings 3-24
SER Triggering 3-24
Making SER Trigger Settings 3-24
Alias Settings 3-25

TABLES

Table 3.1: Definitions for Active Setting Group Indication Relay Word Bits SG1 and SG2 3-10
Table 3.2: Definitions for Active Setting Group Switching SELOGIC Control Equation Settings SS1 And SS2 3-11
Table 3.3: Breaker Maintenance Information for a 13.8 kV Circuit Breaker 3-16
Table 3.4: Breaker Monitor Settings and Settings Ranges 3-18

FIGURES

Figure 3.1: Response of Thermal and Rolling Demand Meters to a Step Input (setting DMTC = 15 minutes) 3-2
Figure 3.2: Voltage V_S Applied to Series RC Circuit 3-3
Figure 3.3: Demand Current Logic Outputs 3-6
Figure 3.4: DC Under- and Overvoltage Elements 3-7
Figure 3.5: Create DC Voltage Elements with SELOGIC Control Equations 3-8
Figure 3.6: SCADA Contact Pulses Input IN104 to Switch Active Relay Setting Groups 3-12

Figure 3.7: Latch Control Switch Controlled by a Single Input to Switch Active Setting Group 3-12
Figure 3.8: Latch Control Switch Operation Time Line 3-14
Figure 3.9: Plotted Breaker Maintenance Points for a 13.8 kV Circuit Breaker 3-17
Figure 3.10: SEL-300G Relay Breaker Maintenance Curve for a 13.8 kV Circuit Breaker 3-19
Figure 3.11: Operation of SELOGIC Control Equation Breaker Monitor Initiation Setting 3-20
Figure 3.12: Example Operation of Optoisolated Inputs IN101 Through IN106 (All Models) 3-21
Figure 3.13: Example Operation of Optoisolated Inputs IN201 Through IN208–Extra I/O Board (Models 0300G_1 and 0300G_Y) 3-22
Figure 3.14: Circuit Breaker Auxiliary Contacts Connected to Optoisolated Inputs IN101and IN102 3-23
Figure 3.15: Example Sequential Events Recorder (SER) Event Report 3-25

SECTION 3: AUXILIARY FUNCTION SETTINGS

INTRODUCTION

This section describes the following functions and their settings.

- Demand Meter
- Station DC Monitor
- Setting Group Selection Function
- Breaker Monitor Function
- Optoisolated Input Debounce Timers
- SER Trigger Settings and Alias Settings

DEMAND METER

Functional Description

The SEL-300G Relay offers the choice between two types of demand metering, settable with the enable setting:

EDEM = THM (Thermal Demand Meter)
or
EDEM = ROL (Rolling Demand Meter)

The relay provides demand and peak demand metering for the following values:

Currents

$I_{A,B,C,N}$	Input currents (A primary)
I_G	Residual ground current (A primary; IG = 3I0 = IA + IB + IC)
$3I_2$	Negative-sequence current (A primary)

Power

$MW_{A,B,C,3P}$	Single (when Delta_Y = Y) and three-phase megawatts
$MVAR_{A,B,C,3P}$	Single (when Delta_Y = Y) and three-phase megavars

Depending on enable setting EDEM, these demand and peak demand values are thermal demand or rolling demand values. The differences between thermal and rolling demand metering are explained in the following discussion.

Comparison of Thermal and Rolling Demand Meters

The example in Figure 3.1 shows the response of thermal and rolling demand meters to a step current input. The current input is at a magnitude of zero and then suddenly goes to a magnitude of 1.0 per unit.

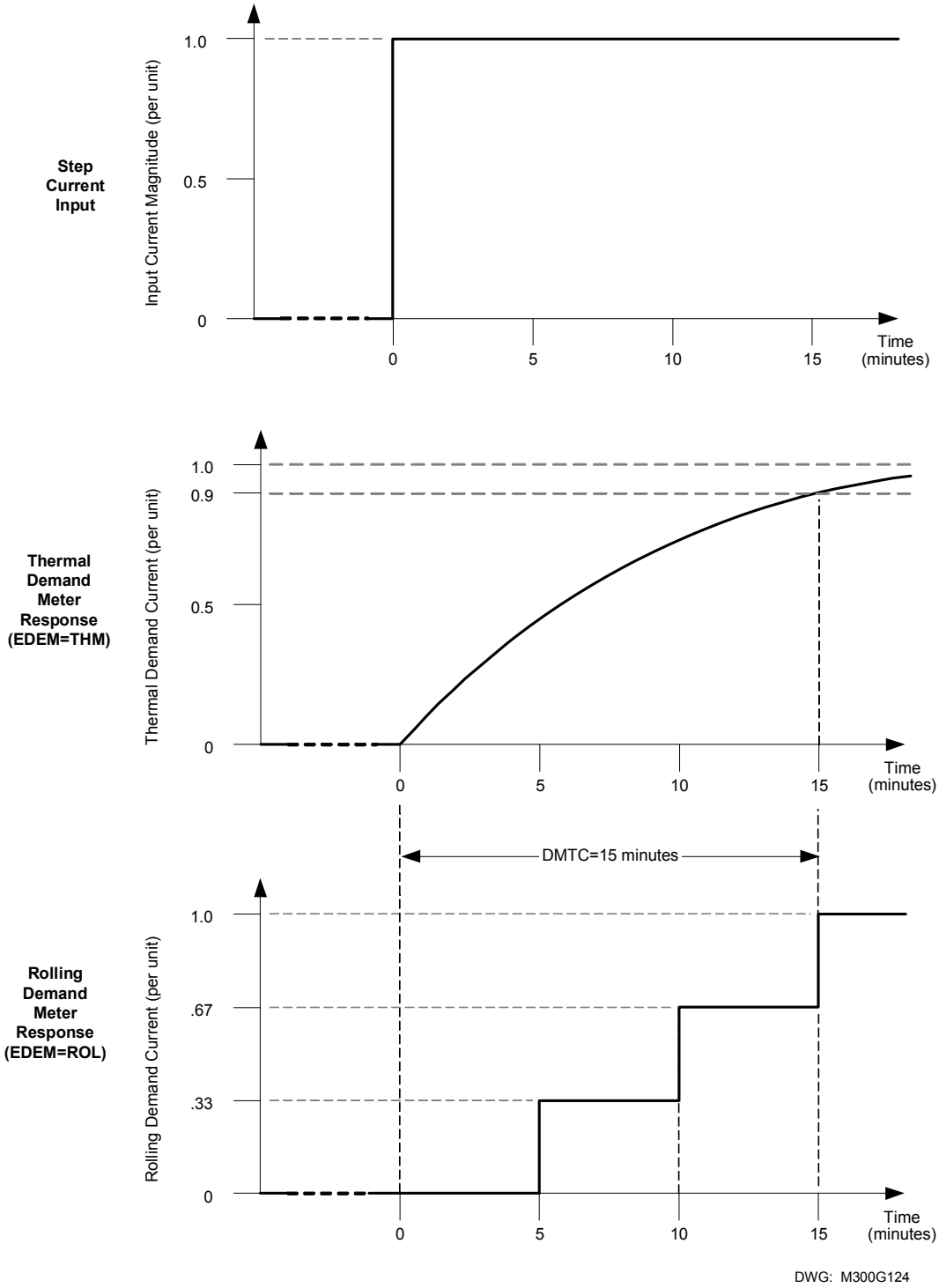

Figure 3.1: Response of Thermal and Rolling Demand Meters to a Step Input (setting DMTC = 15 minutes)

Thermal Demand Meter Response (EDEM = THM)

The response of the thermal demand meter in Figure 3.1 (middle) to the step current input (top) is analogous to the series RC circuit in Figure 3.2.

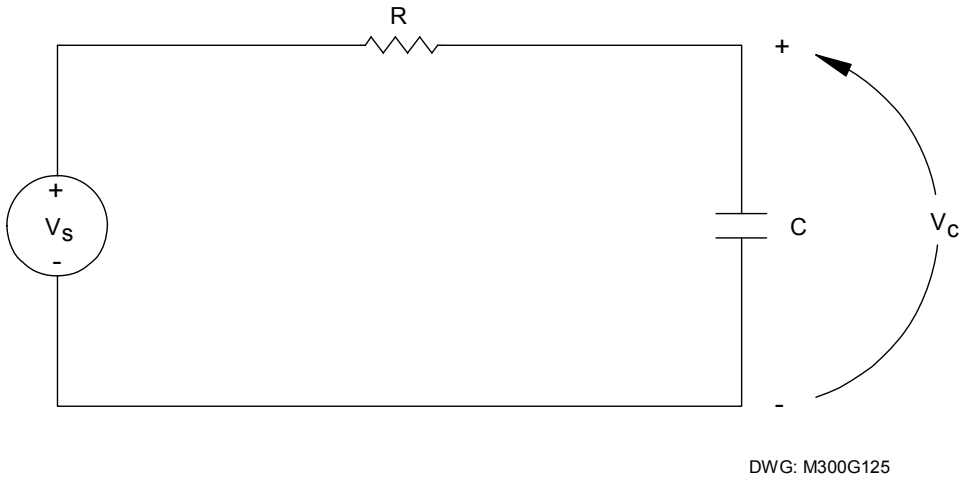

Figure 3.2: Voltage V_S Applied to Series RC Circuit

In the analogy:

Voltage V_S in Figure 3.2 corresponds to the step current input in Figure 3.1 (top).

Voltage V_C across the capacitor in Figure 3.2 corresponds to the response of the thermal demand meter in Figure 3.1 (middle).

If voltage V_S in Figure 3.2 has been at zero (V_S = 0.0 per unit) for some time, voltage V_C across the capacitor in Figure 3.2 is also at zero (V_C = 0.0 per unit). If voltage V_S is suddenly stepped up to some constant value (V_S = 1.0 per unit), voltage V_C across the capacitor starts to rise toward the 1.0 per unit value. This voltage rise across the capacitor is analogous to the response of the thermal demand meter in Figure 3.1 (middle) to the step current input (top).

In general, as voltage V_C across the capacitor in Figure 3.2 cannot change instantaneously, the thermal demand meter response is not immediate either for changes in applied current magnitude. The thermal demand meter response time is based on the demand meter time constant setting DMTC. Note in Figure 3.1, the thermal demand meter response (middle) is at 90 percent (0.9 per unit) of full applied value (1.0 per unit) after a time period equal to setting DMTC = 15 minutes, referenced to when the step current input is first applied.

The SEL-300G updates thermal demand values approximately every 2 seconds.

Rolling Demand Meter Response (EDEM = ROL)

The response of the rolling demand meter in Figure 3.1 (bottom) to the step current input (top) is calculated with a sliding time-window arithmetic average calculation. The width of the sliding time-window is equal to the demand meter time constant setting DMTC. Note in Figure 3.1, the rolling demand meter response (bottom) is at 100 percent (1.0 per unit) of full applied value (1.0 per unit) after a time period equal to setting DMTC = 15 minutes, referenced to when the step current input is first applied.

When EDM = ROL, the rolling demand meter integrates the applied signal input in 5-minute intervals. The integration is performed approximately every 2 seconds. The average value for an integrated 5-minute interval is stored as a 5-minute total. The rolling demand meter then averages a number of the 5-minute totals to produce the rolling demand meter response. In the Figure 3.1 example, the rolling demand meter averages the three latest 5-minute totals because setting DMTC = 15 (15/5 = 3). The rolling demand meter response is updated every 5 minutes, after a new 5-minute total is calculated.

The following is a step-by-step calculation of the rolling demand response example in Figure 3.1 (bottom).

Time = 0 Minutes

Presume that the input current magnitude has been at zero for quite some time before "Time = 0 minutes" (or the demand meters were reset). The three 5-minute intervals in the sliding time-window at "Time = 0 minutes" each integrate into the following 5-minute totals:

5-Minute Totals	Corresponding 5-Minute Interval
0.0 per unit	–15 to –10 minutes
0.0 per unit	–10 to –5 minutes
0.0 per unit	–5 to 0 minutes
0.0 per unit	

Rolling demand meter response at "Time = 0 minutes" = 0.0/3 = 0.0 per unit

Time = 5 Minutes

The three 5-minute intervals in the sliding time-window at "Time = 5 minutes" each integrate into the following 5-minute totals:

5-Minute Totals	Corresponding 5-Minute Interval
0.0 per unit	–10 to –5 minutes
0.0 per unit	–5 to 0 minutes
1.0 per unit	0 to 5 minutes
1.0 per unit	

Rolling demand meter response at "Time = 5 minutes" = 1.0/3 = 0.33 per unit

Time = 10 Minutes

The three 5-minute intervals in the sliding time-window at "Time = 10 minutes" each integrate into the following 5-minute totals:

5-Minute Totals	Corresponding 5-Minute Interval
0.0 per unit	–5 to 0 minutes
1.0 per unit	0 to 5 minutes
1.0 per unit	5 to 10 minutes
2.0 per unit	

Rolling demand meter response at "Time = 10 minutes" = 2.0/3 = 0.67 per unit

Time = 15 Minutes

The three 5-minute intervals in the sliding time-window at "Time = 15 minutes" each integrate into the following 5-minute totals:

5-Minute Totals	Corresponding 5-Minute Interval
1.0 per unit	0 to 5 minutes
1.0 per unit	5 to 10 minutes
1.0 per unit	10 to 15 minutes
3.0 per unit	

Rolling demand meter response at "Time = 15 minutes" = 3.0/3 = 1.0 per unit

The examples in this section discuss demand current, but MW and MVAR demand values are also available, as stated at the beginning of this subsection.

Demand Ammeter Thresholds

After calculating the current and power demand quantities, the relay compares the latest current demand magnitudes to settable demand thresholds. This logic is shown in Figure 3.3.

Setting Descriptions

Enable Demand Metering (THM, ROL) EDEM = ROL

Enable demand metering using a thermal calculation or rolling window average calculation.

Demand Meter Time Constant (5, 10, 15, 30, 60 min) DMTC = 15

Set the demand meter time constant.

Phase Demand Pickup (OFF, 0.50–16.00 A secondary, 5 A model) PDEMP = 5.50
(OFF, 0.10–3.20 A secondary, 1 A model)

Neutral (IN) Demand Pickup (OFF, 0.50–16.00 A secondary, 5 A model) NDEMP = 1.00
(OFF, 0.10–3.20 A secondary, 1 A model)

Residual (3I0) Demand Pickup (OFF, 0.5–16 A secondary, 5 A model) GDEMP = 1.00
(OFF, 0.10–3.20 A secondary, 1 A model)

Neg.-Seq. Demand Pickup (OFF, 0.5–16 A secondary, 5 A model) QDEMP = 1.00
(OFF, 0.10–3.20 A secondary, 1 A model)

Note: When you change either setting EDEM or DMTC, the relay resets the demand meter values to zero. If you change the active setting group and the new group is set with a different EDEM or DMTC setting, the relay also resets the demand meter values to zero. Demand current pickup settings PDEMP, NDEMP, GDEMP, and QDEMP can be changed without affecting the demand meters.

The demand current pickup settings are applied to demand current meter outputs as shown in Figure 3.3. For example, when residual ground demand current $I_{G(DEM)}$ goes above corresponding demand pickup GDEMP, Relay Word bit GDEM asserts to logical 1. Use these demand current logic outputs (PDEM, NDEM, GDEM, and QDEM) to alarm for high loading or unbalance conditions.

Relay Word Bits

Relay Word Bit	Function Description	Typical Applications
PDEM	Phase Demand Current Exceeds Pickup	Indication, Testing
NDEM	Neutral Demand Current Exceeds Pickup	Indication, Testing
GDEM	Residual Demand Current Exceeds Pickup	Indication, Testing
QDEM	Neg.-Seq. Demand Current Exceeds Pickup	Indication, Testing

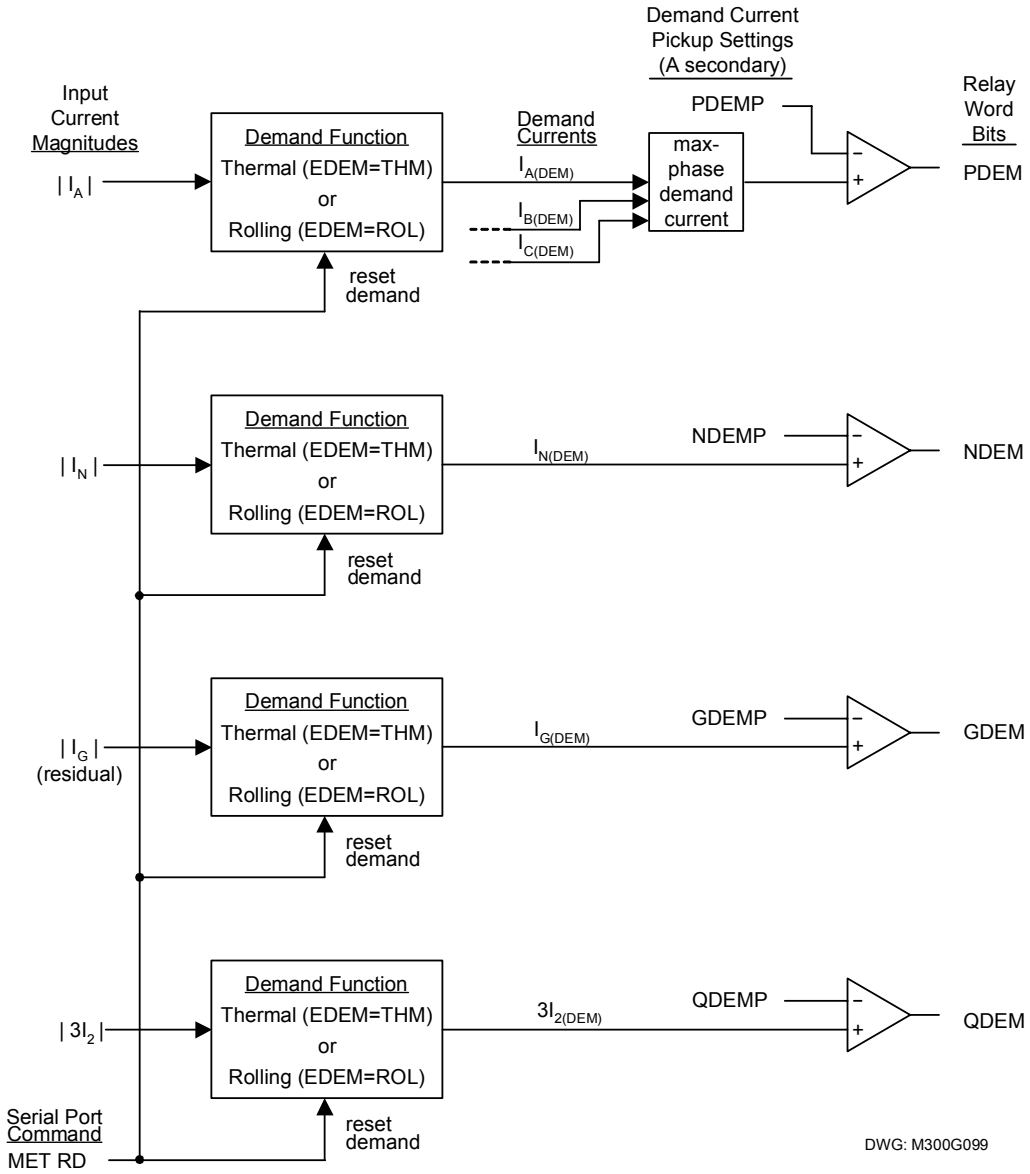

Figure 3.3: Demand Current Logic Outputs

STATION DC MONITOR

Element Description

Functional Description

The SEL-300G directly measures the dc voltage applied to the + and – power supply input terminals, Z25 and Z26. The relay reports the measured dc voltage in the meter function and in the event report data. The relay also compares the measured voltage magnitude to two settable thresholds which generate Relay Word bits for control and indication.

If the SEL-300G has a 125/250 Vac/Vdc supply, it can be powered by ac voltage (85 to 264 Vac) connected to the rear-panel terminals labeled POWER. When powering the relay with ac voltage, the dc voltage elements in Figure 3.4 see the **average** of the sampled ac voltage powering the relay, which is very near zero volts (as displayed in column Vdc in event reports). Thus, pickup settings DCLOP and DCHIP should be set to off (DCLOP = OFF, DCHIP = OFF); they are of no real use.

If an event report is displayed with the **EVE R** command, column Vdc will display the sampled ac voltage waveform, rather than the average.

Setting Descriptions

DC Battery Voltage Level 1 (OFF, 20–300 Vdc)	DCHIP = OFF
DC Battery Voltage Level 2 (OFF, 20–300 Vdc)	DCLOP = OFF

The DCHIP and DCLOP setting ranges allow the SEL-300G to monitor nominal battery voltages of 24, 48, 125, and 250 V. When testing the pickup settings DCLOP and DCHIP, **do not** operate the relay outside of its power supply limits. See ***Relay Specifications and Options*** in ***Section 1: Introduction and Specifications*** for the various power supply specifications. The power supply rating is located on the serial number sticker on the relay rear panel.

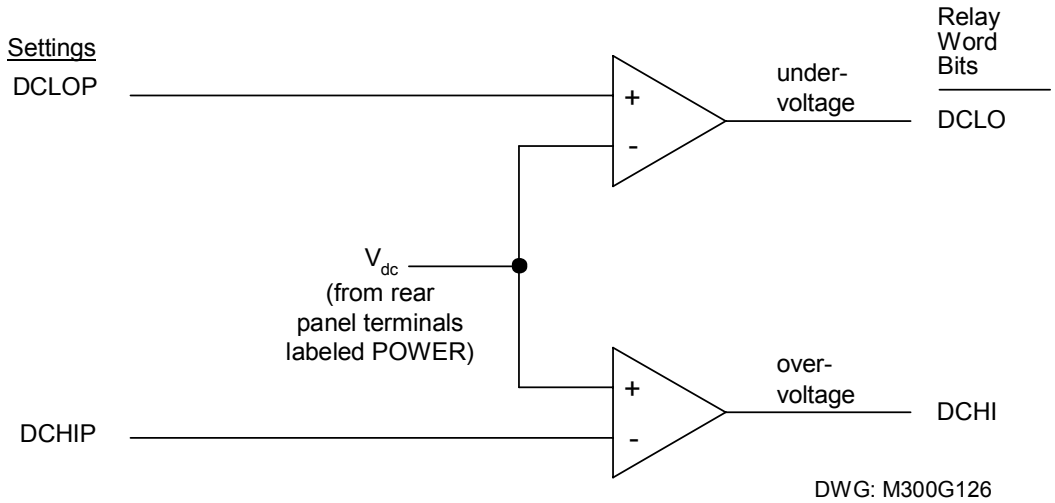

Figure 3.4: DC Under- and Overvoltage Elements

Relay Word Bits

Relay Word Bit	Function Description	Typical Applications
DCHI	DC Voltage Greater Than DCHIP Setting	Indication, Event Triggering, SER Triggering
DCLO	DC Voltage Less Than DCLOP Setting	Indication, Event Triggering, SER Triggering

Logic outputs DCLO and DCHI in Figure 3.4 operate as follows:

DCLO = 1 (logical 1), if $V_{dc} \leq$ pickup setting DCLOP
= 0 (logical 0), if $V_{dc} >$ pickup setting DCLOP
DCHI = 1 (logical 1), if $V_{dc} \geq$ pickup setting DCHIP
= 0 (logical 0), if $V_{dc} <$ pickup setting DCHIP

Create Desired Logic for DC Under- and Overvoltage Alarming

Pickup settings DCLOP and DCHIP are set independently. Thus, they can be set:

DCLOP < DCHIP or DCLOP > DCHIP

Figure 3.5 shows the resultant dc voltage elements that can be created with SELOGIC® control equations for these two setting cases. In these two examples, the resultant dc voltage elements are time-qualified by timer SV5T and then routed to output contact OUT106 for alarm purposes.

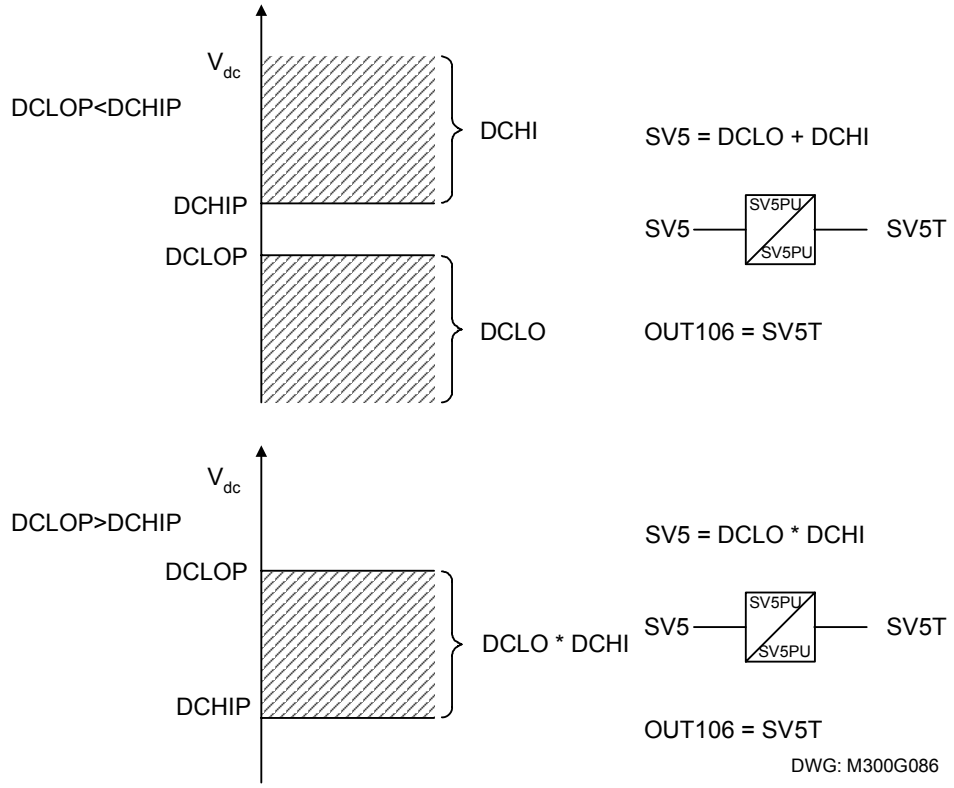

Figure 3.5: Create DC Voltage Elements with SELOGIC Control Equations

DCLO < DCHI (Top of Figure 3.5)

Output contact OUT106 asserts when:

$V_{dc} \leq$ DCLOP or $V_{dc} \geq$ DCHIP

Pickup settings DCLOP and DCHIP are set such that output contact OUT106 asserts when dc battery voltage goes below or above allowable limits.

If the relay loses power entirely (V_{dc} = 0 Vdc)

V_{dc} = < DCLOP

then output contact OUT106 should logically assert (according to the top of Figure 3.5), but cannot because of the total loss of power (all output contacts deassert on total loss of power). Thus, the resultant dc voltage element at the bottom of Figure 3.5 would probably be a better choice—see the following discussion.

DCLO > DCHI (Bottom of Figure 3.5)

Output contact OUT106 asserts when:

DCHIP $\leq V_{dc} \leq$ DCLOP

Pickup settings DCLOP and DCHIP are set such that output contact OUT106 asserts when dc battery voltage stays between allowable limits.

If the relay loses power entirely (V_{dc} = 0 Vdc)

V_{dc} = < DCHIP

then output contact OUT106 should logically deassert (according to the bottom of Figure 3.5), and this is surely what happens for a total loss of power (all output contacts deassert on total loss of power).

Output Contact Type Considerations ("a" or "b")

Consider the output contact type ("a" or "b") needed for output contact OUT106 in the bottom of Figure 3.5 (dc voltage alarm example).

If SELOGIC control equation setting OUT106 is asserted (OUT106 = SV5T = logical 1; dc voltage OK), the state of output contact OUT106 (according to contact type) is:

closed ("a" type output contact)

open ("b" type output contact)

If SELOGIC control equation setting OUT106 is deasserted (OUT106 = SV5T = logical 0; dc voltage **not** OK), the state of output contact OUT106 (according to contact type) is:

open ("a" type output contact)

closed ("b" type output contact)

If the relay loses power entirely, all output contacts deassert, and the state of output contact OUT106 (according to contact type) is:

open ("a" type output contact)

closed ("b" type output contact)

Note that in this case, the relay ALARM output contact ("b" type output contact) also closed (see Figure 4.16).

SETTING GROUP SELECTION FUNCTION

The relay has two (2) independent setting groups. Each setting group has complete relay and SELOGIC control equation settings.

Active Setting Group Indication

Only one setting group can be active at a time. Relay Word bits SG1 and SG2 indicate the active setting group.

Table 3.1: Definitions for Active Setting Group Indication Relay Word Bits SG1 and SG2

Relay Word Bit	Definition
SG1	Indication that setting Group 1 is the active setting group
SG2	Indication that setting Group 2 is the active setting group

For example, if setting Group 2 is the active setting group, Relay Word bit SG2 asserts to logical 1, and SG1 deasserts to logical 0.

Selecting the Active Setting Group

The active setting group is selected with

- SELOGIC control equation settings SS1 and SS2
- The serial port **GROUP** command (see ***Section 10: Serial Port Communications and Commands***)
- The front-panel GROUP pushbutton (see ***Section 9: Front-Panel Operation***)

SELOGIC control equation settings SS1 and SS2 have priority over the serial port **GROUP** command and the front-panel GROUP pushbutton in selecting the active setting group.

Operation of SELOGIC Control Equation Settings SS1 and SS2

SELOGIC control equation settings SS1 and SS2 appear in the relay Global Settings.

Table 3.2: Definitions for Active Setting Group Switching SELOGIC Control Equation Settings SS1 And SS2

Setting	Definition
SS1	go to (or remain in) setting Group 1
SS2	go to (or remain in) setting Group 2

The operation of these settings is explained with the following example.

Assume the active setting group starts out as setting Group 1. Corresponding Relay Word bit SG1 is asserted to logical 1 as an indication that setting Group 1 is the active setting group (see Table 3.1).

With setting Group 1 as the active setting group, setting SS1 has priority. If setting SS1 is asserted to logical 1, setting Group 1 remains the active setting group, regardless of the activity of setting SS2. With settings SS1 and SS2 deasserted to logical 0, setting Group 1 still remains the active setting group.

With setting Group 1 as the active setting group, if setting SS1 is deasserted to logical 0 and SS2 asserts to logical 1, the relay switches from setting Group 1 as the active setting group to Group 2 as the active setting group, after qualifying time setting TGR. In this example, TGR qualifies the assertion of setting SS2 before it can change the active setting group.

Having switched to Group 2, as long as SS2 remains asserted, the relay will remain in Group 2 regardless of the activity of setting SS1.

Operation of Serial Port GROUP Command and Front-Panel GROUP Pushbutton

SELOGIC control equation settings SS1 and SS2 have priority over the serial port GROUP command and the front-panel GROUP pushbutton in selecting the active setting group. If either **one** of SS1 or SS2 asserts to logical 1, neither the serial port **GROUP** command nor the front-panel GROUP pushbutton can be used to switch the active setting group. But if SS1 and SS2 **both** deassert to logical 0, the serial port **GROUP** command or the front-panel GROUP pushbutton can be used to switch the active setting group.

See ***Section 10: Serial Port Communications and Commands*** for more information on the serial port **GROUP** command. See ***Section 9: Front-Panel Operation*** for more information on the front-panel GROUP pushbutton.

Relay Disabled Momentarily During Active Setting Group Change

The relay is disabled for a **few seconds** while the relay is in the process of changing active setting groups. Relay elements, timers, and logic are reset, unless indicated otherwise in specific logic description. Local bits LB1 through LB16 and latch bits LT1 through LT16 states are retained during an active setting group change.

Active Setting Group Switching Example

Use a latch control switch to select setting Group 1 and 2 in the SEL-300G. In this example, a SCADA contact is connected to optoisolated input IN104. Each pulse of the SCADA contact changes the active relay setting group. The SCADA contact is not maintained, just pulsed to switch setting groups.

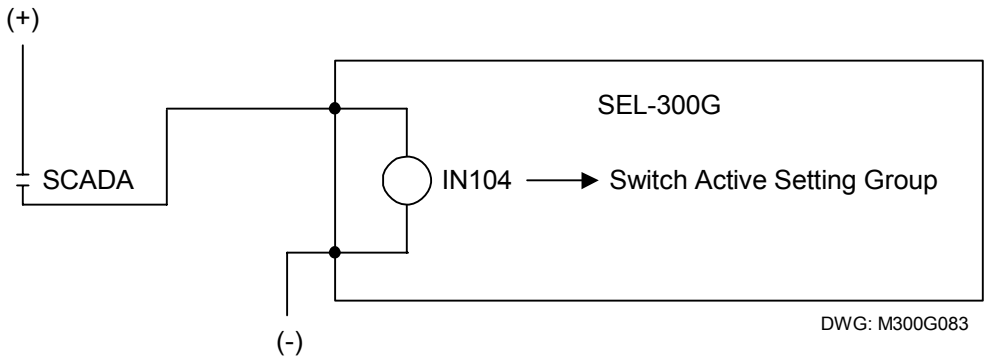

Figure 3.6: SCADA Contact Pulses Input IN104 to Switch Active Relay Setting Groups

If setting Group 1 is active and the SCADA contact is pulsed, the setting Group 2 is then activated. If the SCADA contact is pulsed again, the setting Group 1 is reactivated.

This logic is implemented in the following SELOGIC control equation settings and displayed in Figure 3.7. (Refer to ***Section 4: SELOGIC Control Equations*** for additional information on SELOGIC control equations and the latch control switch function.)

SET5 = /IN104*!LT5	[= (rising edge of input IN104) **AND** NOT(LT5)]
RST5 = /IN104*LT5	[= (rising edge of input IN104) **AND** LT5]
SS1 = LT5	[= LT5; activate setting Group 1]
SS2 = !LT5	[= NOT(LT5); activate setting Group 2]

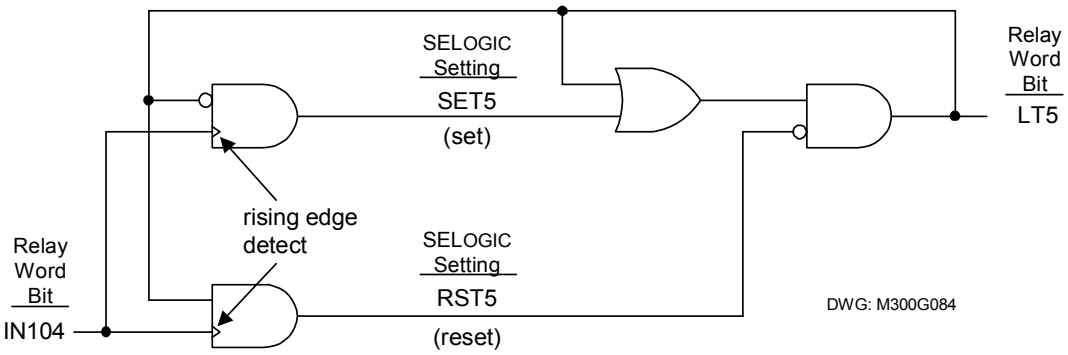

Figure 3.7: Latch Control Switch Controlled by a Single Input to Switch Active Setting Group

Feedback Control

Note in Figure 3.7 that the latch control switch output (latch bit LT5) is effectively used as feedback for SELOGIC control equation settings SET5 and RST5. The feedback of latch bit LT5 "guides" input IN104 to the correct latch control switch input.

If latch bit LT5 = logical 0, input IN104 is routed to setting SET5 (set latch bit LT5):

SET5 = /IN104*!LT5 = /IN104*NOT(LT5) = /IN104*NOT(logical 0)
= /IN104 = rising edge of input IN104
RST5 = /IN104*LT5 = /IN104*(logical 0)
= logical 0

If latch bit LT5 = logical 1, input IN104 is routed to setting RST5 (reset latch bit LT5):

SET5 = /IN104*!LT5 = /IN104*NOT(LT5) = /IN104*NOT(logical 1)
= /IN104*(logical 0)
= logical 0
RST5 = /IN104*LT5 = /IN104*(logical 1)
= /IN104 = rising edge of input IN104

Rising-Edge Operators

Refer to Figure 3.7 and Figure 3.8.

The rising-edge operator in front of Relay Word bit IN104 (/IN104) sees a logical 0 to logical 1 transition as a "rising edge," and /IN104 asserts to logical 1 for one processing interval.

The rising-edge operator on input IN104 is necessary because any single assertion of optoisolated input IN104 by the SCADA contact will last for at least a few cycles, and each individual assertion of input IN104 should only change the state of the latch control switch once (e.g., latch bit LT5 changes state from logical 0 to logical 1).

For example in Figure 3.7, if

LT5 = logical 0

then input IN104 is routed to setting SET5 (as discussed previously):

SET5 = /IN104 = rising edge of input IN104

If input IN104 is then asserted for a few cycles by the SCADA contact (see Pulse 1 in Figure 3.8), SET5 is asserted to logical 1 for one processing interval. This causes latch bit LT5 to change state to

LT5 = logical 1

the next processing interval.

With latch bit LT5 now at logical 1 for the next processing interval, input IN104 is routed to setting RST5 (as discussed previously):

RST5 = /IN104 = rising edge of input IN104

This would then appear to enable the "reset" input (setting RST5) the next processing interval. But the "rising edge" condition occurred in the preceding processing interval. /IN104 is now at logical 0, so setting RST5 does not assert, even though input IN104 remains asserted for more than a few cycles by the SCADA contact.

If the SCADA contact deasserts and then asserts again (new rising edge—see Pulse 2 in Figure 3.8), the "reset" input (setting RST5) asserts and latch bit LT5 deasserts back to logical 0 again. Thus each individual assertion of input IN104 (Pulse 1, Pulse 2, Pulse 3, and Pulse 4 in Figure 3.8) changes the state of latch control switch just once.

Note: Refer to subsection ***Optoisolated Input Debounce Timers*** Figure 3.12. Relay Word bit IN104 shows the state of optoisolated input IN104 **after** the input pickup/dropout debounce timer IN104D. Thus, when using Relay Word bit IN104 in Figure 3.7 and associated SELOGIC control equations, keep in mind any time delay produced by the input pickup/dropout debounce timer IN104D.

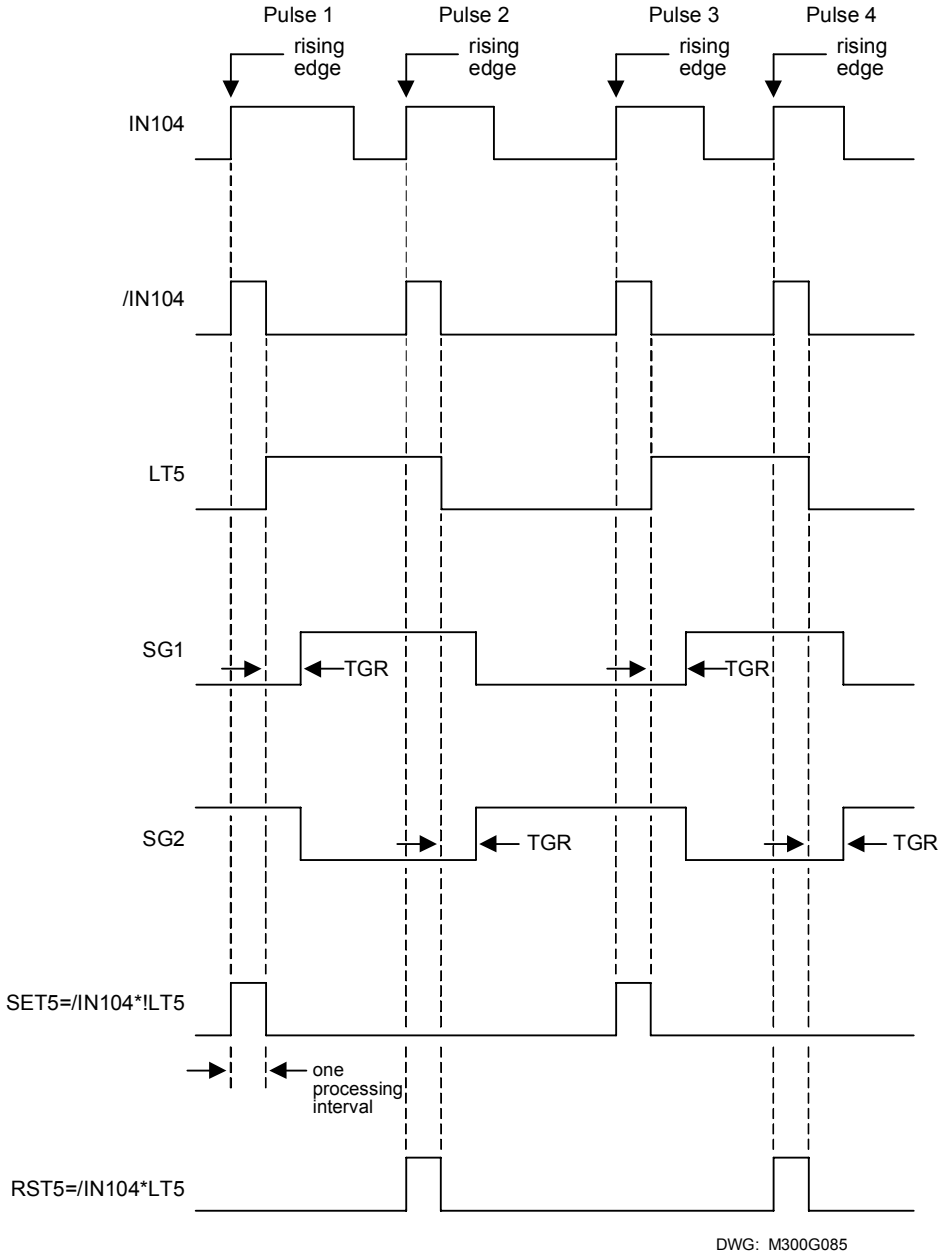

Figure 3.8: Latch Control Switch Operation Time Line

Active Setting Group Retained

Power Loss

The active setting group is retained if power to the relay is lost and then restored. If a particular setting group is active when power is lost, the relay uses the same active setting group when power is restored.

Settings Change

If individual settings are changed (for the active setting group or one of the other setting groups), the active setting group is retained, much like in the preceding ***Power Loss*** explanation.

If individual settings are changed for a setting group other than the active setting group, there is no interruption of the active setting group (the relay is not momentarily disabled).

If the individual settings change causes a change in one or more SELOGIC control equation settings SS1 or SS2, the active setting group can be changed, subject to the newly enabled SS1 and SS2 settings.

NOTE: Make Active Setting Group Switching Settings With Care

The active setting group is stored in nonvolatile memory so it can be retained during power loss or settings change. The nonvolatile memory is rated for a finite number of "writes" for all setting group changes. Exceeding the limit can result in an EEPROM self-test failure. **An average of 10 setting groups changes per day can be made for a 25 year relay service life**.

This requires that SELOGIC control equation settings SS1 and SS2 be set with care. Do not use SS1 or SS2 settings that result in continuous cyclical changing of the active setting group. Time setting TGR qualifies settings SS1 and SS2 before changing the active setting group. If optoisolated inputs are used in settings SS1 or SS2, the inputs have their own built-in debounce timer that can help in providing the necessary time qualification.

BREAKER MONITOR FUNCTION

The breaker monitor in the SEL-300G helps in scheduling circuit breaker maintenance.

The breaker monitor settings in Table 3.4 are available via the **SET G** command (see Table 6.1 and the ***Settings Sheets*** in ***Section 6: Enter Relay Settings***). Also refer to ***BRE Command (Breaker Monitor Data)*** and ***BRE n Command (Preload/Reset Breaker Wear)*** in ***Section 10: Serial Port Communications and Commands***).

The breaker monitor is set with breaker maintenance information provided by circuit breaker manufacturers. This breaker maintenance information lists the number of close/open operations that are permitted for a given current interruption level. The following is an example of breaker maintenance information for a 13.8 kV circuit breaker.

Table 3.3: Breaker Maintenance Information for a 13.8 kV Circuit Breaker

Current Interruption Level (kA)	Permissible Number of Close/Open Operations[a]
0.0–1.2	10,000
2.0	3,700
3.0	1,500
5.0	400
8.0	150
10.0	85
20.0	12

[a] The action of a circuit breaker closing and then later opening is counted as **one** close/open operation.

The breaker maintenance information in Table 3.3 is plotted in Figure 3.9.

Connect the plotted points in Figure 3.9 for a breaker maintenance curve. To estimate this breaker maintenance curve in the SEL-300G breaker monitor, three set points are entered:

Set Point 1 **maximum** number of close/open operations with corresponding current interruption level.

Set Point 2 number of close/open operations that correspond to some **midpoint** current interruption level.

Set Point 3 number of close/open operations that correspond to the **maximum** current interruption level.

These three points are entered with the settings in Table 3.4.

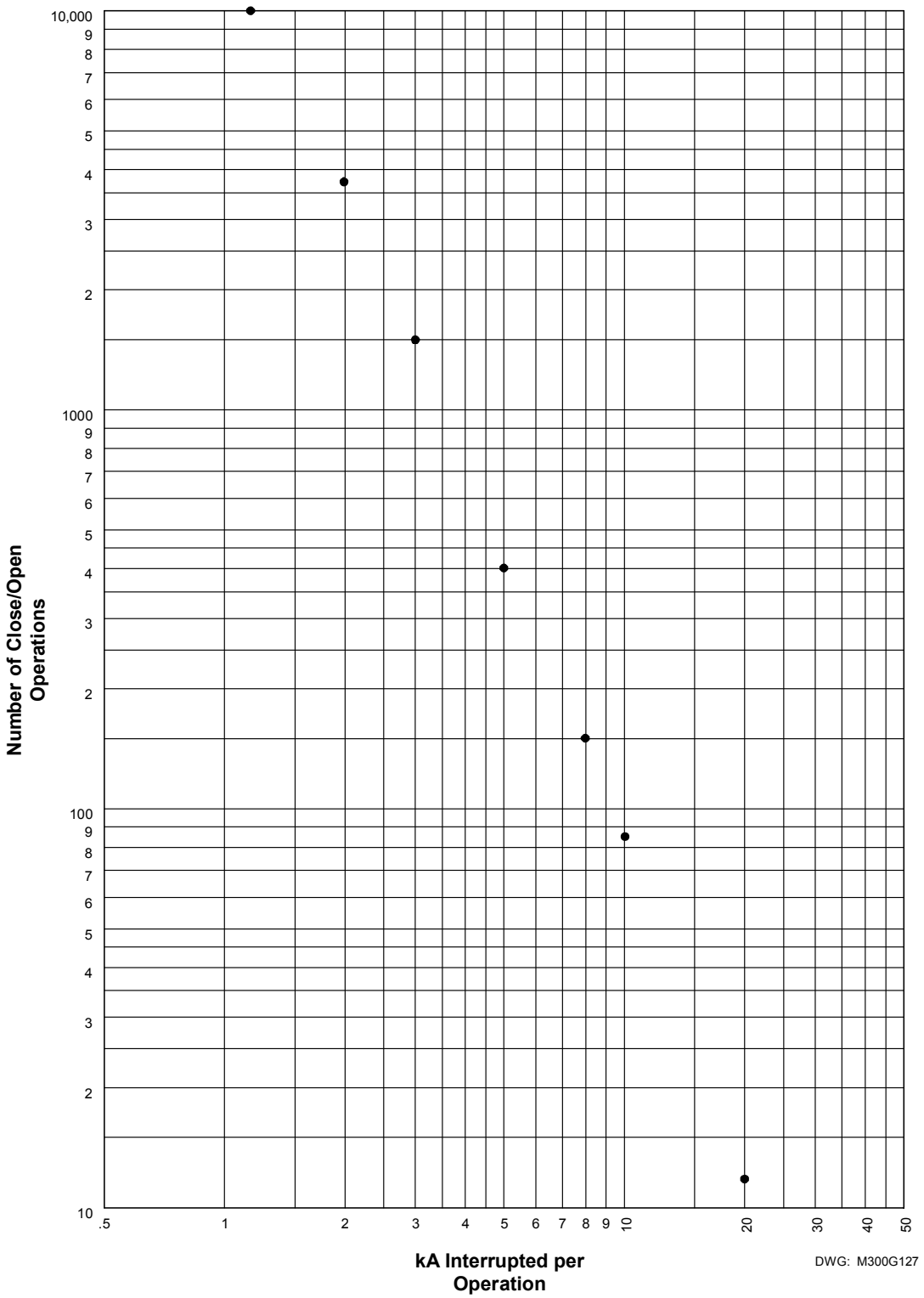

Figure 3.9: Plotted Breaker Maintenance Points for a 13.8 kV Circuit Breaker

Breaker Monitor Setting Example

Table 3.4: Breaker Monitor Settings and Settings Ranges

Setting	Definition	Range
COSP1	Close/Open set point 1—maximum	1–65000 close/open operations
COSP2	Close/Open set point 2—middle	1–65000 close/open operations
COSP3	Close/Open set point 3—minimum	1–65000 close/open operations
KASP1[a]	kA Interrupted set point 1—minimum	0.1–999.0 kA in 0.1 kA steps
KASP2	kA Interrupted set point 1—middle	0.1–999.0 kA in 0.1 kA steps
KASP3[a]	kA Interrupted set point 1—maximum	0.1–999.0 kA in 0.1 kA steps
BKMON	SELOGIC control equation breaker monitor initiation setting	Relay Word bits referenced in Table 4.6

[a] The ratio of settings KASP3/KASP1 must be: $5 \leq KASP3/KASP1 \leq 100$

The following settings are made from the breaker maintenance information in Table 3.3 and Figure 3.9:

COSP1 = 10000
COSP2 = 150
COSP3 = 12
KASP1 = 1.2
KASP2 = 8.0
KASP3 = 20.0

Figure 3.10 shows the resultant breaker maintenance curve.

Breaker Maintenance Curve Details

In Figure 3.10, note that set points KASP1, COSP1 and KASP3, COSP3 are set with breaker maintenance information from the two extremes in Table 3.3 and Figure 3.9.

In this example, set point KASP2, COSP2 happens to be from an in between breaker maintenance point in the breaker maintenance information in Table 3.3 and Figure 3.9, but it doesn't have to be. Set point KASP2, COSP2 should be set to provide the best "curve-fit" with the plotted breaker maintenance points in Figure 3.9.

Each phase (A, B, and C) has its own breaker maintenance curve (like that in Figure 3.10), because the separate circuit breaker interrupting contacts for phases A, B, and C do not necessarily interrupt the same magnitude current (depending on fault type and loading).

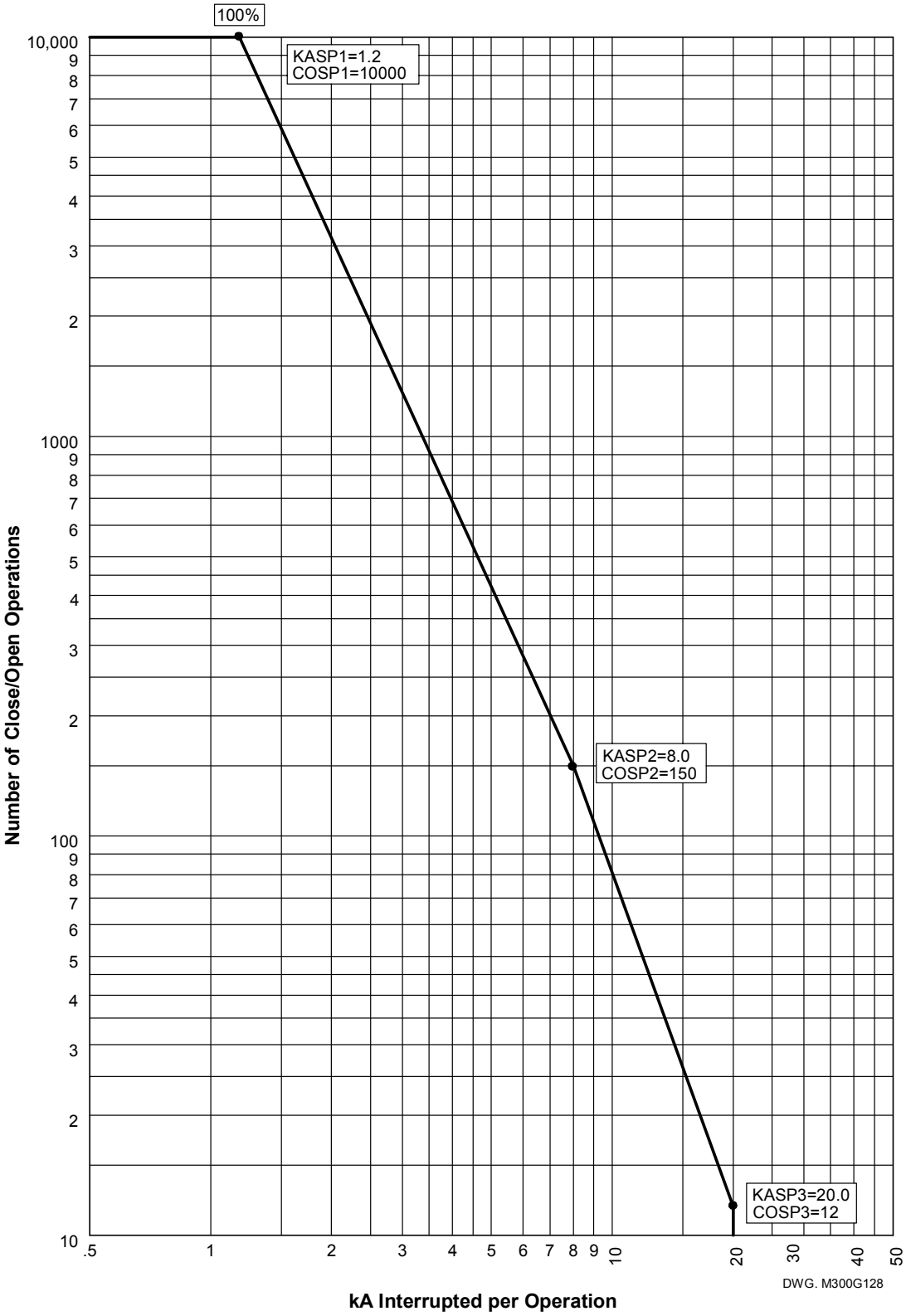

Figure 3.10: SEL-300G Relay Breaker Maintenance Curve for a 13.8 kV Circuit Breaker

In Figure 3.10 note that the breaker maintenance curve levels off horizontally below set point KASP1, COSP1. This is the close/open operation limit of the circuit breaker (COSP1 = 10000), regardless of interrupted current value.

Also, note that the breaker maintenance curve falls vertically above set point KASP3, COSP3. This is the maximum interrupted current limit of the circuit breaker (KASP3 = 20.0 kA). If the interrupted current is greater than setting KASP3, the interrupted current is accumulated as a current value equal to setting KASP3.

Operation of SELOGIC Control Equation Breaker Monitor Initiation Setting BKMON

The SELOGIC control equation breaker monitor initiation setting BKMON in Table 3.4 determines when the breaker monitor reads in current values (Phases A, B, and C) for the breaker maintenance curve (see Figure 3.10) and the breaker monitor accumulated currents/trips [see ***BRE Command (Breaker Monitor Data)*** in ***Section 10: Serial Port Communications and Commands***].

The BKMON setting looks for a rising edge (logical 0 to logical 1 transition) as the indication to read in current values. The acquired current values are then applied to the breaker maintenance curve and the breaker monitor accumulated currents/trips (see references in previous paragraph).

In the factory default settings, the SELOGIC control equation breaker monitor initiation setting is set:

BKMON = TRIP1 (TRIP1 is the logic output of Figure 4.6)

Refer to Figure 3.11. When BKMON asserts (Relay Word bit TRIP1 goes from logical 0 to logical 1), the breaker monitor reads in the current values and applies them to the breaker monitor maintenance curve and the breaker monitor accumulated currents/trips.

As detailed in Figure 3.11, the breaker monitor actually reads in the current values 0.75 cycles after the assertion of BKMON. This helps especially if an instantaneous trip occurs. The instantaneous element trips when the fault current reaches its pickup setting level. The fault current may still be "climbing" to its full value and then levels off. The 0.75-cycle delay on reading in the current values allows time for the fault current to level off.

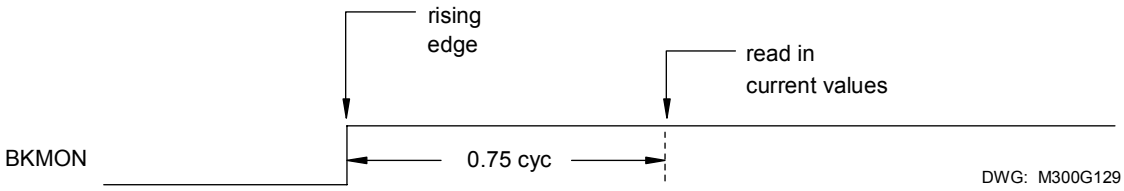

Figure 3.11: Operation of SELOGIC Control Equation Breaker Monitor Initiation Setting

Interpretation of the breaker monitor data is discussed in ***Section 8: Monitoring and Metering Functions.***

OPTOISOLATED INPUT DEBOUNCE TIMERS

Figure 3.12 and Figure 3.13 show the resultant Relay Word bits that follow corresponding optoisolated inputs for the different SEL-300G models. The figures show examples of energized and de-energized optoisolated inputs and corresponding Relay Word bit states. To assert an input, apply rated control voltage to the appropriate terminal.

The optoisolated inputs in Figure 3.12 and Figure 3.13 operate similarly.

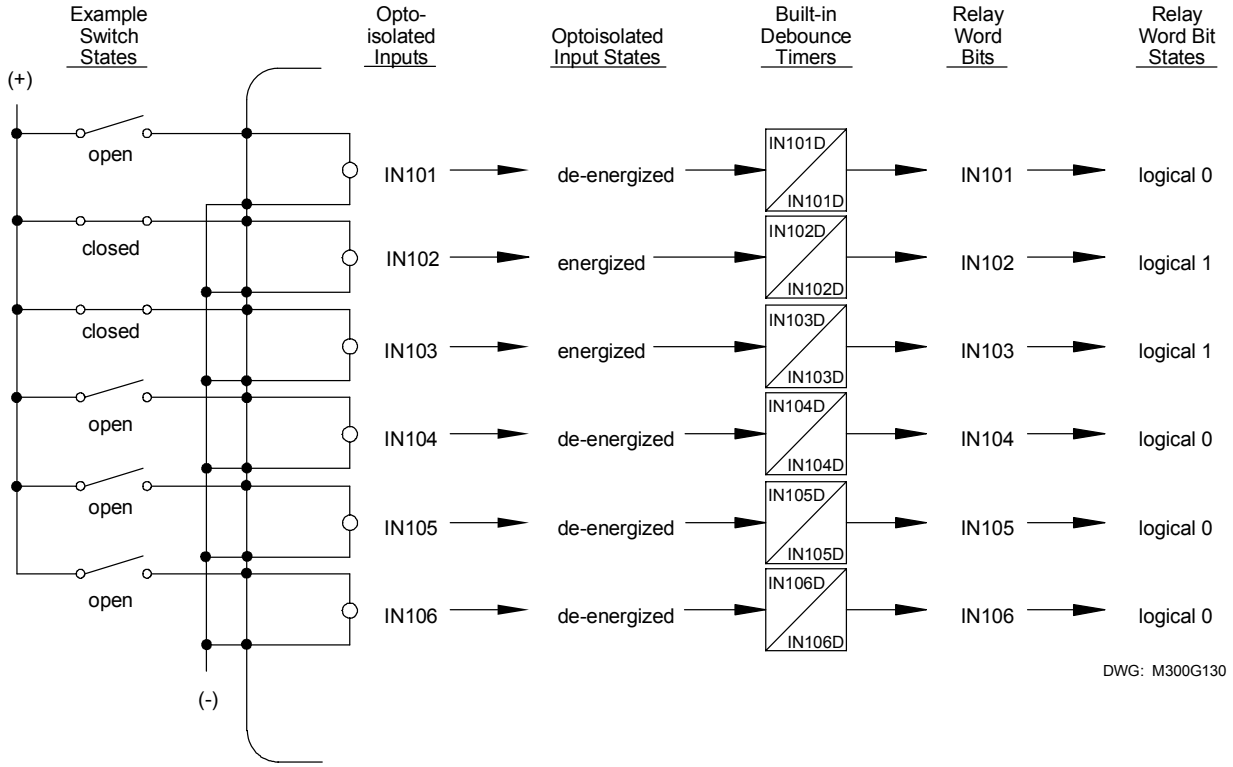

Figure 3.12: Example Operation of Optoisolated Inputs IN101 Through IN106 (All Models)

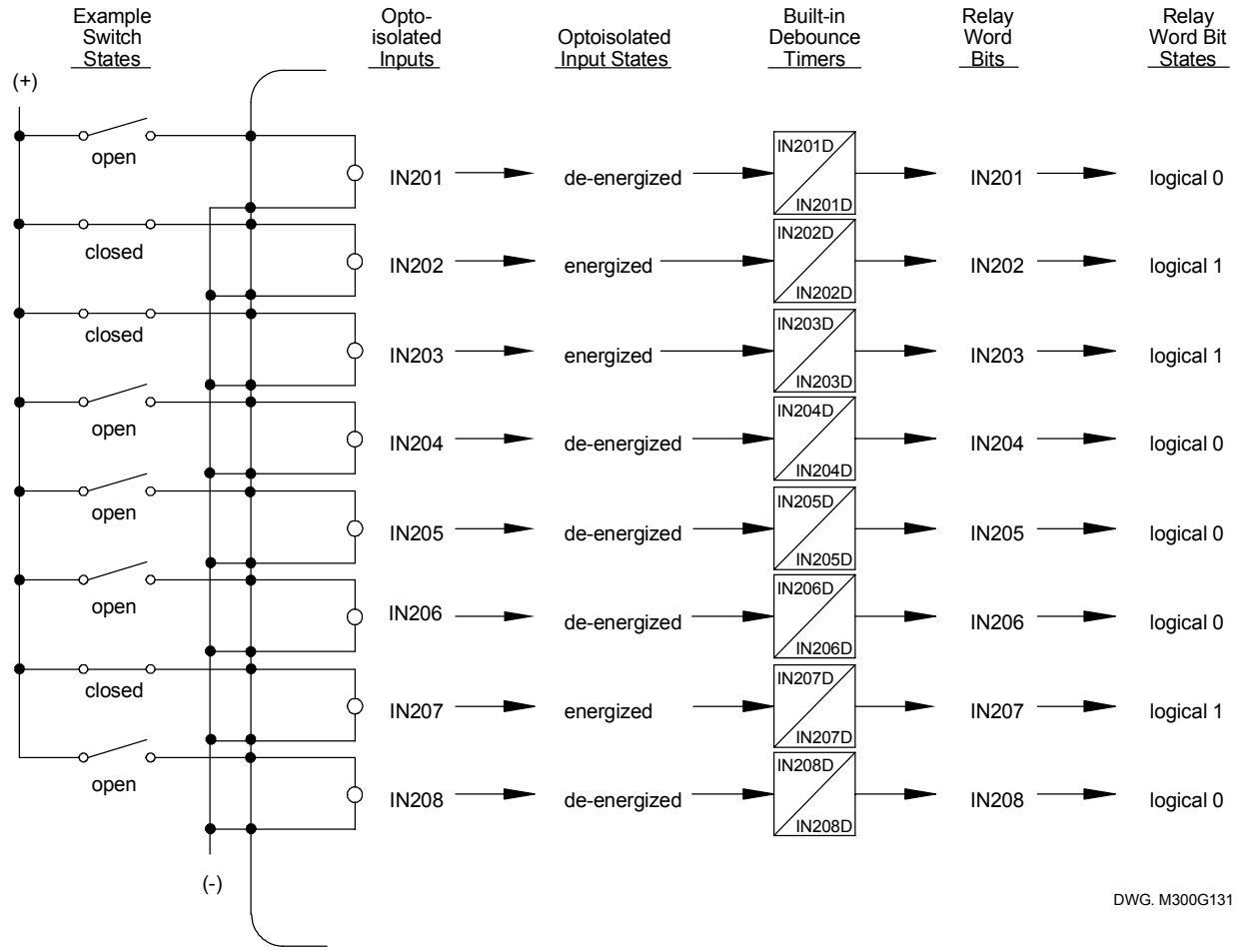

Figure 3.13: Example Operation of Optoisolated Inputs IN201 Through IN208–Extra I/O Board (Models 0300G_1 and 0300G_Y)

Input Debounce Timers

See Figure 3.12 and Figure 3.13.

Each input has settable pickup/dropout timers (IN101D through IN106D) for input energization/de-energization debounce. Note that a given time setting (e.g., IN101D = 0.50) is applied to both the pickup and dropout time for the corresponding input.

Time settings IN101D through IN106D are settable from 0.00 to 1.00 cycles. The relay takes the entered time setting and internally runs the timer at the nearest 1/16-cycle. For example, if setting IN5D = 0.80, internally the timer runs at the nearest 1/16-cycle: 13/16-cycles (13/16 = 0.8125).

For **most applications**, the input pickup/dropout debounce timers should be set in 1/4-cycle increments. For example, in the **factory default settings**, all the optoisolated input pickup/dropout debounce timers are set at 1/2-cycle (e.g., IN104 = 0.50). See ***SHO Command (Show/View Settings)*** in ***Section 10: Serial Port Communications and Commands*** for a list of the factory default settings.

The relay processing interval is 1/4-cycle, so Relay Word bits IN101 through IN106 are updated every 1/4-cycle. The optoisolated input status may have made it through the pickup/dropout

debounce timer (for settings less than 1/4-cycle) because these timers run each 1/16-cycle, but Relay Word bits IN101 through IN106 are updated every 1/4-cycle.

If more than 1 cycle of debounce is needed, run Relay Word bit IN*n* (*n* = 101 through 106) through a SELOGIC control equation variable timer and use the output of the timer for input functions.

Input Functions

Optoisolated inputs IN101 through IN106 receive their function by how their corresponding Relay Word bits IN101 through IN106 are used in SELOGIC control equations.

Factory Settings Example

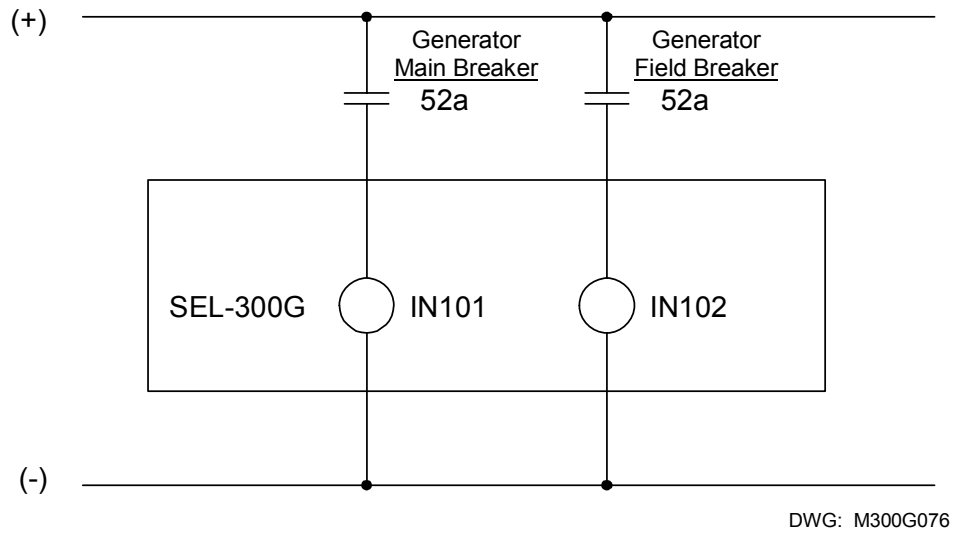

Figure 3.14: Circuit Breaker Auxiliary Contacts Connected to Optoisolated Inputs IN101and IN102

The functions for input IN101 is described in the following discussions.

Input IN101

Relay Word bit IN101 is used in the factory settings for the SELOGIC control equation circuit breaker status setting:

52A = IN101

Connect input IN101 to a 52a circuit breaker auxiliary contact.

If a 52b circuit breaker auxiliary contact is connected to input IN101, the setting is changed to:

52A = !IN101 [!IN101 = NOT(IN101)]

The pickup/dropout timer for input IN1 (IN1D) is set at

IN1D = 0.5 cycles

to provide input energization/de-energization debounce.

Using Relay Word bit IN101 for the circuit breaker status setting 52A does **not** prevent using Relay Word bit IN101 in other SELOGIC control equation settings.

SER TRIGGER SETTINGS AND ALIAS SETTINGS

SER Triggering

The relay triggers (generates) an entry in the SER report for a change of state of any one of the elements listed in the SER1, SER2, SER3, and SER4 trigger settings. The factory default settings are:

SER1 = 51NT 50N1T 51CT 51VT 64G1T 64G2T SV3 81D1 81D1T 81D2 81D2T 51N 50N1 51C 51V 64G1 64G2 INAD INADT

SER2 = DP3 LB1 RB1 LT3 TRGTR BCW IN101 IN102 TRIP1 TRIP2 TRIP3 TRIP4 BNDT 24C2T 32P1T 24C2 32P1 SV4 SV2T

SER3 = 24D1 24D1T 46Q1 46Q1T 60LOP BNDA 32P2 32P2T SWING OOS OOST

SER4 = 0

The elements are Relay Word bits referenced in Table 9.3. The relay monitors each element in the SER lists every 1/4 cycle. If an element changes state, the relay time-tags the changes in the SER. For example, setting SER1 contains:

Time-overcurrent element pickups (51N and 51V)

Instantaneous overcurrent element (50N1)

Thus, any time one of these overcurrent elements picks up or drops out, the relay time-tags the change in the SER.

The relay adds a message to the SER to indicate power up or settings change (to active setting group) conditions:

Relay newly powered up or settings changed

Each entry in the SER includes SER row number, date, time, element name or alias, and element state.

Making SER Trigger Settings

Enter up to 24 element names in each of the SER settings via the **SET R** command. See Table 4.6 for references to valid relay element (Relay Word bit) names. See the **SET R** command in Table 6.1 and corresponding ***Settings Sheets*** at the end of ***Section 6: Enter Relay Settings***. Use either spaces or commas to delimit the elements. For example, if you enter setting SER1 as:

SER1 = 51NT, 50N1T,, 51CT, 51VT 64G1T,

The relay displays the setting as:

SER1 = 51NT 50N1T 51CT 51VT 64G1T

The relay can monitor up to 96 elements in the SER (24 in each of SER1, SER2, SER3, and SER4).

Alias Settings

Associated with the relay SER function is a capability called Alias naming. Using this function, you can rename up to 40 Relay Word bits, changing the way they are represented in the SER report. In addition to changing the Relay Word bit name, you can also assign the state names used when the Relay Word bit is asserted and deasserted.

To rename a Relay Word bit with an ALIAS*n* setting, use **SET R** to access the settings. For each ALIAS*n* setting, enter the Relay Word bit name, a space, then the new name, a space, the text to display when the bit asserts, a space, then the text to display when the Relay Word bit deasserts. Each of the text strings can be up to 15 characters. If a space is desired within the text string, use an underscore (_) instead. Do not use the characters ' ? , = " : / ; \ in a text string; they are treated as spaces.

As an example, you could set ALIAS1 as follows:

ALIAS1 = IN101 GEN_MAIN_BKR CLOSED OPENED

SER = …IN101…

With these settings, the SER function would record the date and time of each assertion and deassertion of the IN101 Relay Word bit in the SER record. The record could look like this:

```
GENERATOR                          Date: 01/30/00    Time: 10:20:45.872
TERMINAL

FID=SEL-300G-R207-V31H425XX4X-Z001001-D20000217       CID=04B0

#     DATE      TIME           ELEMENT           STATE

2     01/30/00  10:20:24.807   GEN_MAIN_BKR      CLOSED
1     01/30/00  10:30:30.828   GEN_MAIN_BKR      OPENED

=>
```

Figure 3.15: Example Sequential Events Recorder (SER) Event Report

For more information regarding the SER reports, see ***Section 11: Event Reports and SER Functions***.

If you do set an alias, be sure to enter the Relay Word bit name (not the new alias name) in one of the SER1–SER4 settings. If the Relay Word bit name is not entered in an SER1–SER4 setting, stated changes for that Relay Word bit will not be recorded, even though the Relay Word bit has an alias.

If you do not wish to use an alias setting, set ALIAS*n* = NA.

TABLE OF CONTENTS

SECTION 4: SELOGIC CONTROL EQUATIONS 4-1

Introduction 4-1
SELOGIC Control Equation Overview 4-1
Relay Word Bits 4-2
Relay Word Bit Operation Example—Neutral Time-Overcurrent Element 51NT 4-2
Other Relay Word Bits 4-3
SELOGIC Control Equations 4-4
SELOGIC Control Equation Operators 4-4
All SELOGIC Control Equations Must Be Set 4-7
SELOGIC Control Equation Limitations 4-7
Nondedicated SELOGIC Control Equation Variable Settings 4-8
Latch Control Switch Settings 4-9
Latch Control Switch Application Ideas 4-10
Local/Remote Generator Shutdown Setting Example 4-10
Latch Control Switch States Retained 4-11
NOTE: Make Latch Control Switch Settings with Care 4-11
Trip Logic 4-12
Set Trip 4-14
Unlatch Trip 4-15
Generator Tripping 4-15
Generator Main Circuit Breaker Trip, TR1 4-15
Generator Field Breaker Trip, TR2 4-16
Prime Mover Trip, TR3 4-16
Generator Lockout Relay Trip, TR4 4-17
Factory Default Tripping Logic 4-17
Program Output Contacts for Tripping 4-19
Close Logic 4-20
Set Close 4-20
Unlatch Close 4-21
Settings Example 4-21
Defeat the Close Logic 4-22
Program an Output Contact for Closing 4-22
Synchronism Checking Function (Models 0300G2 and 0300G3) 4-22
Element Description 4-22
Setting Calculation 4-25
Element Operating Characteristics 4-31
ER Control Equation 4-34
Output Contact Control 4-35
Factory Settings Example 4-35
Operation of Output Contacts for Different Output Contact Types 4-35
Local Control Switches 4-39
Local Control Switch Types 4-40
Factory Settings Examples 4-42
Additional Local Control Switch Application Ideas 4-43
Local Control Switch States Retained 4-43
Remote Control Switches 4-44

Remote Bit Application Ideas 4-44
Remote Bit States Not Retained When Power is Lost 4-44
Remote Bit States Retained When Settings Changed or Active Setting Group Changed 4-45
Front-Panel Display Configuration 4-45
Traditional Indicating Panel Meters 4-45
Traditional Indicating Panel Meters Replaced with Rotating Meter Display 4-45
Traditional Indicating Panel Lights 4-46
Traditional Indicating Panel Lights Replaced with Rotating Text Display 4-47
General Operation of Rotating Text Display Settings 4-47
Factory Settings Examples 4-48
Additional Settings Examples 4-49
Inadvertent Energization 4-50
Breaker Failure Protection 4-52
Breaker Failure Protection With Breaker Flashover Detection 4-53
Application Examples 4-54
Performance Alarms 4-54
Relay Word Bits (used in SELOGIC Control Equations) 4-59

TABLES

Table 4.1: SELOGIC Control Equation Operators (listed in processing order) 4-4
Table 4.2: Association Between Tripping Settings and Controlled Apparatus 4-14
Table 4.3: Correspondence Between Local Control Switch Positions and Label Settings 4-40
Table 4.4: Correspondence Between Local Control Switch Types and Required Label Settings 4-42
Table 4.5: Relay Self-Tests 4-57
Table 4.6: SEL-300G Relay Word Bits 4-59
Table 4.7: Relay Word Bit Definitions for Table 4.6 4-61

FIGURES

Figure 4.1: Result of Falling-Edge Operator on a Deasserting Underfrequency Element 4-5
Figure 4.2: SELOGIC Control Equation Variable Timer Logic 4-9
Figure 4.3: Traditional Latching Relay 4-9
Figure 4.4: Latch Control Switches Drive Latch Bits LT1 Through LT16 4-10
Figure 4.5: Latch Control Switch to Shut Down Generator 4-10
Figure 4.6: Trip Logic 4-13
Figure 4.7: Minimum Trip Duration Timer Operation (see Figure 4.6) 4-14
Figure 4.8: Close Logic 4-20
Figure 4.9: Synch-Check Function 25RCF Setting Examples 4-27
Figure 4.10: Synch-Check Function Voltage Elements 4-31
Figure 4.11: Synch-Check Function Voltage Element Characteristic 4-32
Figure 4.12: Synch-Check Function Slip Elements 4-32
Figure 4.13: Synch-Check Function Angle Elements 4-33
Figure 4.14: Breaker Close Failure Logic Diagram 4-33
Figure 4.15: Synch-Check Function Angle Characteristics 4-34
Figure 4.16: Logic Flow for Example Output Contact Operation (All Models) 4-37

Figure 4.17: Logic Flow for Example Output Contact Operation— Extra I/O Board (Model 0300G_1 and 0300G_Y) 4-38
Figure 4.18: Local Control Switches Drive Local Bits LB1 Through LB16 4-39
Figure 4.19: Local Control Switch Configured as an ON/OFF Switch 4-40
Figure 4.20: Local Control Switch Configured as an OFF/MOMENTARY Switch 4-41
Figure 4.21: Local Control Switch Configured as an ON/OFF/MOMENTARY Switch 4-41
Figure 4.22: Configured GEN SHUTDOWN Switch Drives Local Bit LB1 4-42
Figure 4.23: Remote Control Switches Drive Remote Bits RB1 Through RB16 4-44
Figure 4.24: Traditional Panel Light Installations 4-47
Figure 4.25: Rotating Text Display Replaces Traditional Panel Light Installations 4-47
Figure 4.26: Inadvertent Energization Logic Diagram 4-51
Figure 4.27: Generator/Breaker Topology Where SEL-300G1 Relay Offers Breaker Failure Protection 4-52
Figure 4.28: SEL-300G Relay Breaker Failure Logic 4-52
Figure 4.29: Generator/Breaker Topology Where SEL-300G1 Relay Offers Breaker Failure and Breaker Flashover Protection 4-53
Figure 4.30: SEL-300G Relay Breaker Failure Plus Breaker Flashover Protection Logic 4-54

SECTION 4: SELOGIC CONTROL EQUATIONS

INTRODUCTION

This section describes SELOGIC® control equations and their various applications within the SEL-300G Relay. Specific topics include:

General Operation of Relay Word Bits

SELOGIC Control Equations

SELOGIC Control Equation Latch Function

SEL-300G Trip Logic

Generator Tripping With Example Settings

SEL-300G Close Logic

Event Triggering

Output Contact Control

Local and Remote Control Switch Settings

Front-Panel Display Configuration Settings

Inadvertent Energization Logic With Example Settings

Breaker Failure Protection

Relay Self-Testing Functions

Additional SELOGIC Control Equation Application Examples

Tables at the end of this section summarize all of the Relay Word bits available for making SELOGIC control equations.

Note: Do not **AND** any of the out-of-step (78) element Relay Word bits with any of the loss-of-field (40) element Relay Word bits.

SELOGIC CONTROL EQUATION OVERVIEW

SELOGIC control equations combine relay protection and control elements with logic operators to create custom protection and control schemes. This section shows how to set the protection and control elements (Relay Word bits) in the SELOGIC control equations.

RELAY WORD BITS

Most of the protection and control element **logic outputs** shown in the various figures in ***Section 2: Relay Element Settings*** and ***Section 3: Auxiliary Function Settings*** are Relay Word bits (labeled as such in the figures). Each Relay Word bit has a label name and can be in either of the following states:

1 (logical 1) or 0 (logical 0)

Logical 1 represents an element being picked up, timed out, or otherwise asserted.

Logical 0 represents an element being dropped out or otherwise deasserted.

A complete listing of Relay Word bits and their descriptions are referenced in Table 4.6.

Relay Word Bit Operation Example—Neutral Time-Overcurrent Element 51NT

As an example of protection element operation via the logic output of Relay Word bits, consider a neutral time-overcurrent element. Refer to neutral time-overcurrent element 51NT in Figure 2.25 in ***Section 2: Relay Element Settings***. The following Relay Word bits are the logic outputs of the neutral time-overcurrent element:

51N	indication that the neutral current magnitude is above the level of the neutral time-overcurrent pickup setting 51NP
51NT	indication that the neutral time-overcurrent element has timed out on its curve
51NR	indication that the neutral time-overcurrent element is fully reset

Neutral Time-Overcurrent Element 51NT Pickup Indication

If the neutral current is **below** the level of the neutral time-overcurrent pickup setting 51NP, Relay Word bit 51N is in the following state:

51N = 0 (logical 0)

If the neutral current is **at or above** the level of the neutral time-overcurrent pickup setting 51NP, Relay Word bit 51N is in the following state:

51N = 1 (logical 1)

If the neutral current is **at or above** the level of the neutral time-overcurrent pickup setting 51NP, neutral time-overcurrent element 51NT is either timing on its curve or is already timed out.

Neutral Time-Overcurrent Element 51NT Time Out Indication

If neutral time-overcurrent element 51NT is **not timed out** on its curve, Relay Word bit 51NT is in the following state:

51NT = 0 (logical 0)

If neutral time-overcurrent element 51NT is **timed out** on its curve, Relay Word bit 51NT is in the following state:

51NT = 1 (logical 1)

Neutral Time-Overcurrent Element 51NT Reset Indication

If neutral time-overcurrent element 51NT is **not fully reset**, Relay Word bit 51NR is in the following state:

51NR = 0 (logical 0)

If neutral time-overcurrent element is **fully reset**, Relay Word bit 51NR is in the following state:

51NR = 1 (logical 1)

If neutral time-overcurrent element 51NT is **not fully reset**, the element is either:

timing on its curve

already timed out

timing to reset (one-cycle reset or electromechanical emulation—see setting 51NRS)

Relay Word Bit Application Examples—Neutral Time-Overcurrent Element 51NT

Common uses for Relay Word bits 51N, 51NT, and 51NR:

51N	testing (e.g., assign to an output contact for pickup testing) trip unlatch logic
51NT	trip logic
51NR	used in testing (e.g., assign to an output contact for reset indication)

Other Relay Word Bits

The preceding example was for a neutral time-overcurrent element, demonstrating Relay Word bit operation for pickup, time-out, and reset conditions. Other Relay Word bits (e.g., those for definite-time overcurrent elements, voltage elements, frequency elements) behave similarly in their assertion or deassertion to logical 1 or logical 0, respectively. The time-overcurrent elements (like the preceding neutral time-overcurrent element example) are unique because they have a Relay Word bit (e.g., 51NR) that asserts for the reset state of the element.

Relay Word bits are used in SELOGIC control equations, which are explained in the following subsection.

SELOGIC CONTROL EQUATIONS

Many of the protection and control element **logic inputs** shown in the various figures in ***Section 2: Relay Element Settings*** and ***Section 3: Auxiliary Function Settings*** are SELOGIC control equations (labeled "SELOGIC Settings" in most of the figures). SELOGIC control equations are set with combinations of Relay Word bits to accomplish such functions as:

tripping circuit breakers

assigning functions to optoisolated inputs

operating output contacts

torque-controlling protection elements

switching active setting groups

Traditional or advanced custom schemes can be created with SELOGIC control equations.

Note: Do not **AND** any of the out-of-step (78) element Relay Word bits with any of the loss-of-field (40) element Relay Word bits. The 78 and 40 elements are updated by the relay on opposite half power system cycles. Therefore, the logical AND of the two element types may not operate as expected.

SELOGIC Control Equation Operators

SELOGIC control equation settings use logic similar to Boolean algebra logic, combining Relay Word bits together using one or more of the six SELOGIC control equation operators listed in Table 4.1.

Table 4.1: SELOGIC Control Equation Operators (listed in processing order)

Operator	Logic Function
/	rising-edge detect
\	Falling-edge detect
( )	parentheses
!	NOT
*	AND
+	OR

Operators in a SELOGIC control equation setting are processed in the order shown in Table 4.1.

SELOGIC Control Equation Rising-Edge Operator, /

The rising-edge operator, /, is applied to individual Relay Word bits only—not to groups of elements within parentheses. For example, the SELOGIC control equation event report generation setting uses rising-edge operators:

ER = /24C2 + /32P1 + /46Q2 + …

The Relay Word bits in this factory setting example are:

24C2 Measured generator volts/hertz equal to or above the pickup setting for the 24C2 volts/hertz element (see Figure 2.13).

32P1 Measured real power less than the pickup setting for the 32P1 reverse/low-forward power element (see Figure 2.15).

46Q2 Measured negative-sequence current greater than the pickup setting for the 46Q2 negative-sequence time-overcurrent element (see Figure 2.19).

When setting ER sees a logical 0 to logical 1 transition, the relay generates an event report if it is not already generating a report that encompasses the new transition. The rising-edge operators cause a logical 0 to logical 1 transition (thus triggering a new report) each time one of the protection elements asserts. Using these settings, the relay triggers a new event report each time any of the protection elements assert, if the relay is not already recording an event report.

SELOGIC Control Equation Falling-Edge Operator, \

The falling-edge operator, \, is applied to individual Relay Word bits only—not to groups of elements within parentheses. The falling-edge operator, \, operates similarly to the rising-edge operator, but looks for Relay Word bit deassertion (element going from logical 1 to logical 0). The falling-edge operator, \, in front of a Relay Word bit sees this logical 1 to logical 0 transition as a "falling edge" and asserts to logical 1 for one processing interval.

For example, suppose the SELOGIC control equation event report generation setting is set with the detection of the falling-edge of an underfrequency element:

ER = ... + \81D1T

When frequency goes above the corresponding pickup level 81D1P, Relay Word bit 81D1T deasserts and an event report is generated (if the relay is not already generating a report that encompasses the new transition). This allows a recovery from an underfrequency condition to be observed. Figure 4.1 demonstrates the action of the falling-edge operator, \, on the underfrequency element in setting ER.

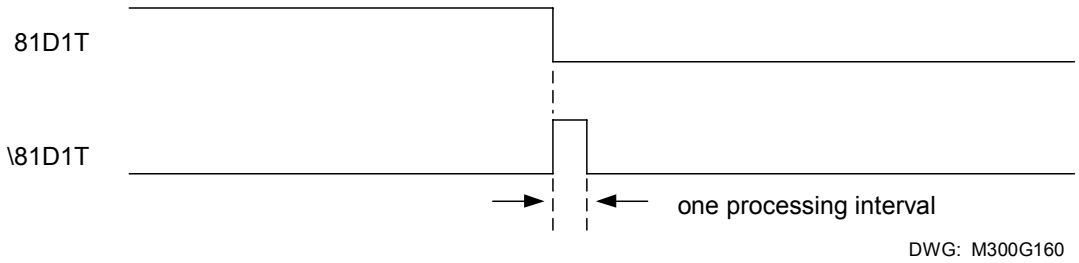

Figure 4.1: Result of Falling-Edge Operator on a Deasserting Underfrequency Element

SELOGIC Control Equation Parentheses Operator, ( )

More than one set of parentheses ( ) can be used in a SELOGIC control equation setting. For example, the following SELOGIC control equation setting has two sets of parentheses:

SV7 = (SV7 + IN103 + TRIP1) * (50H1 + 50R1 + 52A)

In the above example, the logic within the parentheses is processed first and then the two parentheses resultants are ANDed together. The above example is from Figure 4.28 in this

section. Parentheses cannot be "nested" (parentheses within parentheses) in a SELOGIC control equation setting.

SELOGIC Control Equation NOT Operator, !

The NOT operator, !, is applied to a single Relay Word bit and also to multiple elements (within parentheses). Following are examples of both.

Example of NOT Operator, !, Applied to Single Element

The internal circuit breaker status logic in the SEL-300G operates on 52a circuit breaker auxiliary contact logic. The SELOGIC control equation circuit breaker status setting is labeled 52A.

When a circuit breaker is closed, the 52a circuit breaker auxiliary contact is closed. When a circuit breaker is open, the 52a contact is open.

The opposite is true for a 52b circuit breaker auxiliary contact. When a circuit breaker is closed, the 52b circuit breaker auxiliary contact is open. When the circuit breaker is open, the 52b contact is closed.

If a 52a contact is connected to optoisolated input IN101, the SELOGIC control equation circuit breaker status setting 52A is set:

52A = IN101

Conversely, if a 52b contact is connected to optoisolated input IN101, the SELOGIC control equation circuit breaker status setting 52A is set:

52A = !IN101 [= NOT(IN101)]

With a 52b contact connected, if the circuit breaker is closed, the 52b contact is open and input IN101 is de-energized [IN101 = 0 (logical 0)]:

52A = !IN101 = NOT(IN101) = NOT(0) = 1

Thus, the SELOGIC control equation circuit breaker status setting 52A sees a closed circuit breaker.

With a 52b contact connected, if the circuit breaker is open, the 52b contact is closed and input IN101 is energized [IN101 = 1 (logical 1)]:

52A = !IN101 = NOT(IN101) = NOT(1) = 0

Thus, the SELOGIC control equation circuit breaker status setting 52A sees an open circuit breaker.

Example of NOT Operator, !, Applied to Multiple Elements (within parentheses)

The SELOGIC control equation trip unlatch setting could be set as follows:

ULTR1 = !(51N + 50L)

Refer also to ***Trip Logic*** in this section.

In this setting example, the unlatch condition comes true only when **both** the 51N (neutral time-overcurrent element pickup indication) and 50L (lowest phase overcurrent element pickup indication) Relay Word bits deassert:

ULTR1 = !(51N + 50L) = NOT(51N + 50L)

As stated previously, the logic within the parentheses is performed first. In this example, the states of Relay Word bits 51N and 50L are ORed together. Then the NOT operator is applied to the logic resultant from the parentheses.

If either one of 51N or 50L is still asserted [e.g., 51N = 1 (logical 1)], the unlatch condition is not true:

ULTR1 = NOT(51N + 50L) = NOT(1 + 0) = NOT(1) = 0

If **both** 51N and 50L are deasserted [i.e., 51N = 0 and 50L = 0 (logical 0)], the unlatch condition is true:

ULTR1 = NOT(51N + 50L) = NOT(0 + 0) = NOT(0) = 1

and the trip condition can unlatch, subject to other conditions in the trip logic (see Figure 4.6).

All SELOGIC Control Equations Must Be Set

All SELOGIC control equations must be set one of the following ways (they cannot be "blank"):

single Relay Word bit (e.g., 52A = IN101)

combination of Relay Word bits (e.g., TR1 = SV3 + SV4 + 46Q2T + 81D1T + 81D2T)

directly to logical 1 (e.g., 46QTC = 1)

directly to logical 0 (e.g., SV6 = 0)

Set SELOGIC Control Equations Directly to 1 or 0

SELOGIC control equations can be set directly to:

1 (logical 1) or 0 (logical 0)

instead of with Relay Word bits. If a SELOGIC control equation setting is set directly to 1, it is always "asserted/on/enabled." If a SELOGIC control equation setting is set equal to 0, it is always "deasserted/off/disabled."

SELOGIC Control Equation Limitations

Any single SELOGIC control equation setting is **limited to 17 Relay Word bits** that can be combined together with the SELOGIC control equation operators listed in Table 4.1. If this limit must be exceeded, use a SELOGIC control equation variable (SELOGIC control equation settings SV1 through SV12) as an intermediate setting step.

For example, assume that a trip equation (such as SELOGIC control equation trip setting TR1) needs more than 17 Relay Word bits in its equation setting. Instead of placing all Relay Word bits into TR1, program some of them into the SELOGIC control equation setting SV1. Next use the resultant SELOGIC control equation variable output (Relay Word bit SV1) in the SELOGIC control equation trip setting TR1.

Note that the SELOGIC control equation variables (SELOGIC control equation settings SV1 through SV16) are processed after the trip equation (SELOGIC control equation trip setting TR).

Thus, any tripping via Relay Word bits SV1 through SV16 is delayed by 1/4 cycle. For most applications, this is probably of no consequence.

All the SELOGIC control equation settings have a combined limit of approximately 330 Relay Word bits that can be combined together with the SELOGIC control equation operators listed in Table 4.1. SELOGIC control equation settings that are set directly to 1 (logical 1) or 0 (logical 0) also have to be included in this combined limit of 330 Relay Word bits—each such setting counted as one Relay Word bit.

As the relay saves its settings, it calculates the percentage of SELOGIC control equation capability used by the settings you entered. The relay reports this percentage as SCEUSE = xx.x as the settings are saved and when you execute the **SHO 1** or **SHO 2** commands. The SCEUSE value provides a measure of the relay control equation capability being used. The remainder (100 – SCEUSE)% is available for future expansion.

NONDEDICATED SELOGIC CONTROL EQUATION VARIABLE SETTINGS

In addition to the torque-control equations, tripping, and output contact control equations, each relay setting group is equipped with 16 nondedicated SELOGIC control equation variables. Each of these variables is equipped with a time-delay pickup timer, a time-delay dropout timer, and an independent definition equation. The ESV setting allows you to select and set only the SELOGIC control equation variables required by your application.

Enable SELOGIC control equations (0–16) ESV = 7

Set ESV equal to the total number of SELOGIC control equation variables required by your application.

SELOGIC control equation

SV1 = 27V1 * 40Z2

SV1 Pickup Time (0.00–3000.00 s) SV1PU = 0.25

SV1 Dropout Time (0.00–3000.00 s) SV1DO = 0.03

The SV1PU setting defines the SV1T Relay Word bit time-delay pickup time. SV1T asserts SV1PU seconds after the SV1 SELOGIC control equation result becomes a logical 1. The SV1DO setting defines the SV1T Relay Word bit time-delay dropout time. Once SV1T is asserted, it remains asserted for SV1DO seconds after the SV1 SELOGIC control equation result becomes a logical 0. The SV1 SELOGIC control equation is the logical definition of the SV1 Relay Word bit. Make the SELOGIC control equation setting by combining Relay Word bits and logical operators, as shown in the examples earlier in this section. Figure 4.2 illustrates the SELOGIC control equation variable timer logic.

Settings SV2–SV16 operate similarly when enabled.

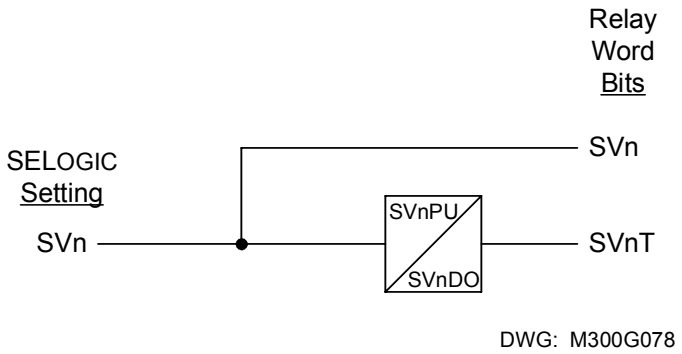

Figure 4.2: SELOGIC Control Equation Variable Timer Logic

LATCH CONTROL SWITCH SETTINGS

The latch control switch feature of this relay replaces latching relays. Traditional latching relays are not dependent on dc voltage to maintain their output contact state. For example, if a latching relay output contact is closed and then dc voltage is lost to the panel, the latching relay output contact remains closed.

The state of a traditional latching relay output contact is changed by pulsing the latching relay inputs (see Figure 4.3). Pulse the set input to close ("set") the latching relay output contact. Pulse the reset input to open ("reset") the latching relay output contact. Often the external contacts wired to the latching relay inputs are from remote control equipment (e.g., SCADA, RTU).

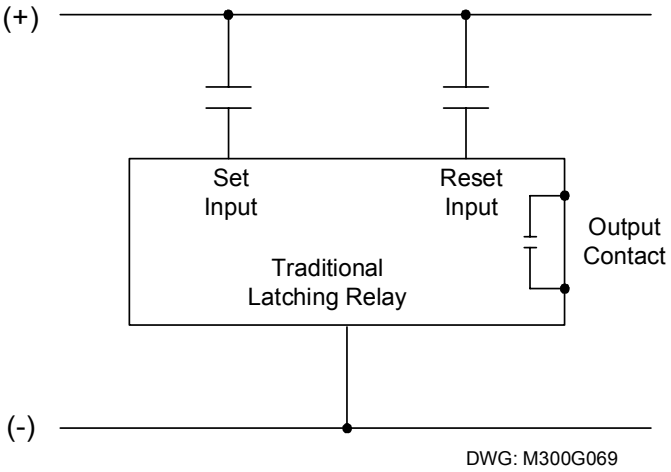

Figure 4.3: Traditional Latching Relay

Up to sixteen (16) latch control switches (as enabled by the ESL setting) in the SEL-300G provide latching relay type functions.

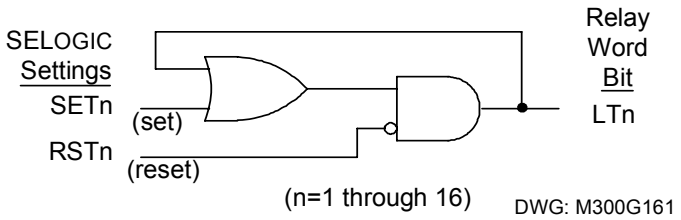

Figure 4.4: Latch Control Switches Drive Latch Bits LT1 Through LT16

The output of the latch control switch in Figure 4.4 is a Relay Word bit LT*n* (*n* = 1 through 16), called a latch bit. The latch control switch logic in Figure 4.4 repeats for each latch bit LT1 through LT16. Use these latch bits in SELOGIC control equations.

These latch control switches each have the following SELOGIC control equation settings:

SET*n* (set latch bit LT*n* to logical 1)

RST*n* (reset latch bit LT*n* to logical 0)

If setting SET*n* asserts to logical 1, latch bit LT*n* asserts to logical 1. If setting RST*n* asserts to logical 1, latch bit LT*n* deasserts to logical 0. If both settings SET*n* and RST*n* assert to logical 1, setting RST*n* has priority and latch bit LT*n* deasserts to logical 0.

Latch Control Switch Application Ideas

Latch control switches can be applied to almost any control scheme. The following is an example of using a latch control switch to perform local or remote generator shutdown through the SEL-300G.

Local/Remote Generator Shutdown Setting Example

Latch bit LT1, is set when either local bit LB1 or remote bit RB1 asserts. LT1 remains asserted until it is reset by assertion of the three-pole open, 3PO, Relay Word bit. This logic is illustrated in Figure 4.5. The 3PO Relay Word bit asserts when the generator main breaker opens, as indicated by the 52A and measured current.

SET1 = LB1 + RB1

RST1 = 3PO

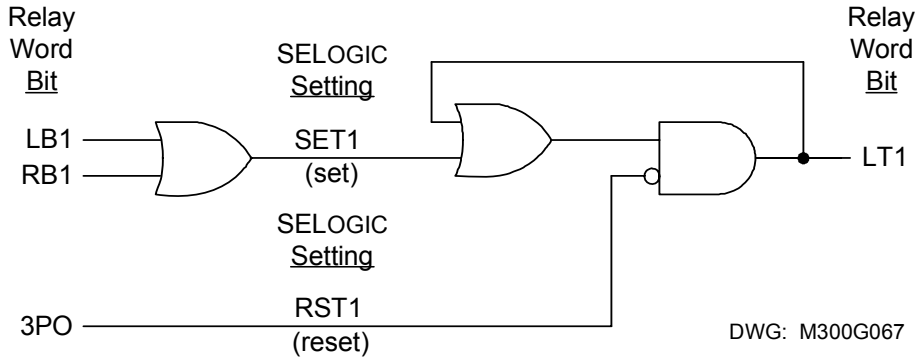

Figure 4.5: Latch Control Switch to Shut Down Generator

In the factory setting example, the latch bit LT1 is used to initiate a sequential generator shutdown. LT1 assertion causes a prime mover trip. As the prime mover stops providing mechanical power to the generator, the relay detects the low-forward power condition using the time-delayed 32P2 element, 32P2T. After the 32P2D time delay, the relay trips the generator main breaker, field breaker, and lockout relay through the SV3 equation:

SV3 = …+ LT1*32P2T +…

When the generator main breaker opens, 3PO asserts, resetting LT1.

Use Local Bit LB1 or Remote Bit RB1 to Shut Down the Generator

Pulse local bit LB1 using the CNTRL front-panel pushbutton.

Remote bits (Relay Word bits RB1 through RB16) are operated through the serial port. See Figure 4.23 and ***Section 10: Serial Port Communications and Commands*** for more information on remote bits.

Latch Control Switch States Retained

Power Loss

The states of the latch bits (LT1 through LT16) are retained if power to the relay is lost and then restored. If a latch bit is asserted (e.g., LT2 = logical 1) when power is lost, it comes back asserted (LT2 = logical 1) when power is restored. If a latch bit is deasserted (e.g., LT3 = logical 0) when power is lost, it comes back deasserted (LT3 = logical 0) when power is restored. This feature makes the latch bit feature behave the same as traditional latching relays. In a traditional installation, if power is lost to the panel, the latching relay output contact position remains unchanged.

Settings Change or Active Setting Group Change

If individual settings are changed (for the active setting group or one of the other setting groups) or the active setting group is changed, the states of the latch bits (Relay Word bits LT1 through LT16) are retained, much like in the preceding ***Power Loss*** explanation.

If individual settings are changed for a setting group other than the active setting group, there is no interruption of the latch bits (the relay is not momentarily disabled).

If the individual settings change or the active setting group change causes a change in SELOGIC control equation settings SET*n* or RST*n* (*n* = 1 through 16), the retained states of the latch bits can be changed subject to the newly enabled settings SET*n* or RST*n*.

NOTE: Make Latch Control Switch Settings with Care

The latch bit states are stored in nonvolatile memory so they can be retained during power loss, settings change, or active setting group change. The nonvolatile memory is rated for a finite number of "writes" for all cumulative latch bit state changes. Exceeding the limit can result in an EEPROM self-test failure. **An average of 150 cumulative latch bit state changes per day can be made for a 25-year relay service life**.

This requires that SELOGIC control equation settings SET*n* and RST*n* for any given latch bit LT*n* (*n* = 1 through 16; see Figure 4.4) be set with care. Settings SET*n* and RST*n* must not

result in continuous cyclical operation of latch bit LT*n*. Use timers to qualify conditions set in settings SET*n* and RST*n*. If any optoisolated inputs IN101 through IN108 are used in settings SET*n* and RST*n*, the inputs have their own debounce timer that can help in providing the necessary time qualification (see ***Section 3: Auxiliary Function Settings***).

TRIP LOGIC

The SEL-300G provides tripping logic to operate up to four external devices. Table 4.2 shows the normal association between tripping settings and the apparatus controlled. Figure 4.6 illustrates the tripping logic.

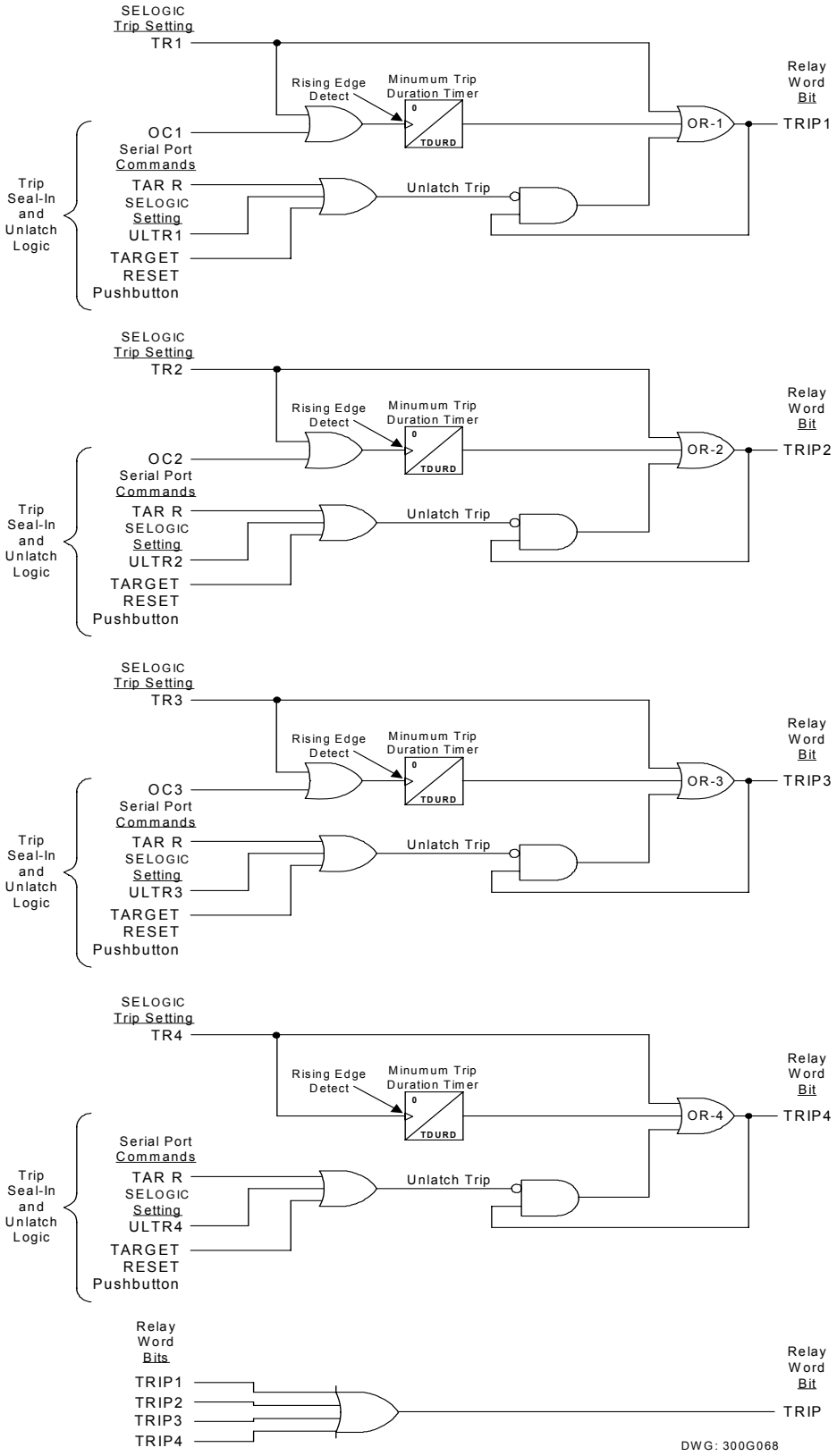

Figure 4.6: Trip Logic

Table 4.2: Association Between Tripping Settings and Controlled Apparatus

Tripping Settings	Controlled Apparatus
TR1, ULTR1	Generator Main Circuit Breaker
TR2, ULTR2	Generator Field Circuit Breaker
TR3, ULTR3	Prime Mover
TR4, ULTR4	Generator Lockout Relay
TDURD	Minimum Trip Duration of All Trips

Set Trip

Refer to Figure 4.6. The TR1 SELOGIC control equation asserts Relay Word bit TRIP1 to logical 1. It also is routed into the Minimum Trip Duration Timer (setting TDURD).

As shown in the time line example in Figure 4.7, the Minimum Trip Duration Timer (with setting TDURD) outputs a logical 1 for a time duration of "TDURD" seconds any time it sees a **rising edge** on its input (logical 0 to logical 1 transition) if it is not already timing (timer is reset). The TDURD timer assures that the TRIP1 Relay Word bit remains asserted at logical 1 for a **minimum** of "TDURD" seconds. If the TR1 SELOGIC control equation result is logical 1 beyond the TDURD time, Relay Word bit TRIP1 remains asserted at logical 1 for as long as the output of OR-1 gate remains at logical 1.

Execution of the serial communications port **OPEN** command causes the TRIP1 Relay Word bit to assert to logical 1 via the Minimum Trip Duration Timer.

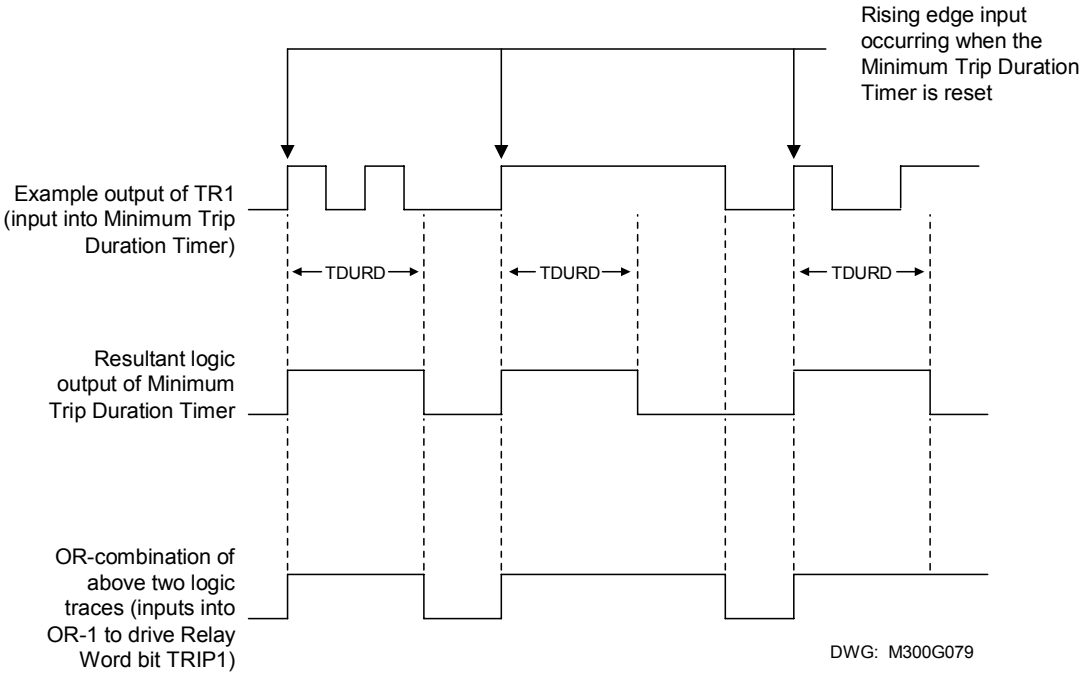

Figure 4.7: Minimum Trip Duration Timer Operation (see Figure 4.6)

Unlatch Trip

Once Relay Word bit TRIP is asserted to logical 1, it remains asserted at logical 1 until **all** the following conditions come true:

Minimum Trip Duration Timer stops timing (logic output of the TDURD timer goes to logical 0)

Output of TR1 gate deasserts to logical 0

One of the following occurs:

- SELOGIC control equation setting ULTR1 asserts to logical 1
- the front-panel TARGET RESET button is pressed
- the **TAR R** (Target Reset) command is executed via the serial port

The front-panel TARGET RESET button or the **TAR R** (Target Reset) serial port command primarily is used during testing. Use these to force the TRIP1 Relay Word bit to logical 0 if test conditions are such that setting ULTR1 does not assert to logical 1 to deassert the TRIP1 Relay Word bit automatically.

TRIP2 through TRIP4 operate similarly to TRIP1, as shown in Figure 4.6. The Relay Word bit TRIP is the OR condition of the four primary TRIP1 bits.

GENERATOR TRIPPING

Generator Main Circuit Breaker Trip, TR1

It is necessary to trip the Generator Main Circuit Breaker to isolate the generator from the system in response to many situations. The SEL-300G elements and logic used to detect each of the conditions are summarized in the following table.

Generator Tripping Condition	Indicated or Detected By:
Generator Manual Shutdown	Local or Remote Bit Operation and Low-Forward Power Condition Detected
Generator Fault	Neutral Overcurrent Elements, 51NT or 50N1T 100% Stator Ground Fault Elements, 64G1T or 64G2T Current Differential Elements, 87R or 87U Ground Current Differential Elements, 87N1T or 87N2T
Unbalance Current Tripping	Negative-Sequence Overcurrent Element, 46Q2T
Prolonged System Fault (Backup Tripping)	Voltage controlled Time-Overcurrent Element, 51CT Voltage Restrained Time-Overcurrent Element, 51VT Mho Phase Distance Elements, Z1P1T, Z1P2T
Generator Abnormal Operating Conditions	Overexcitation (Volts/Hertz) Element, 24C2T Reverse Power Element, 32P1T Out-of-Step Element, OOST Loss-of-Field Elements, 41Z1T or 40Z2T
Generator/System Frequency Conditions	Over/Underfrequency Elements, 81DnT
Generator Inadvertent Energization	Inadvertent Energization Detected, INADT

Generator Field Breaker Trip, TR2

It is necessary to trip the Generator Field Breaker if there is a generator fault or when tripping the generator manually. Field breaker tripping also is recommended for most abnormal operating conditions, excepting over/underfrequency element operation. The SEL-300G elements and logic used to detect field breaker tripping conditions are summarized in the table below. The field is left energized after over/underfrequency trips and negative-sequence overcurrent trips so if the situation can be remedied quickly, the generator can be put back into service quickly.

Field Breaker Tripping Condition	Indicated or Detected By:
Generator Manual Shutdown	Local or Remote Bit Operation and Low-Forward Power Condition Detected
Generator Fault	Neutral Overcurrent Elements, 51NT or 50N1T 100% Stator Ground Fault Elements, 64G1T or 64G2T Current Differential Elements, 87R or 87U Ground Current Differential Elements, 87N1T or 87N2T
Prolonged System Fault (Backup Tripping)	Voltage Controlled Time-Overcurrent Element, 51CT Voltage Restrained Time-Overcurrent Element, 51VT Mho Phase Distance Elements, Z1P1T, Z1P2T
Generator Abnormal Operating Conditions	Overexcitation (Volts/Hertz) Element, 24C2T Reverse Power Element, 32P1T Loss-of-Field Elements, 41Z1T or 40Z2T
Generator Inadvertent Energization	Inadvertent Energization Detected, INADT

Prime Mover Trip, TR3

A prime mover trip is performed first during a manual generator shutdown. The prime mover is also tripped in the event of a generator fault. Typically, the prime mover is not tripped in response to abnormal operating conditions. As with the field breaker trips, this is so that the generator can be reconnected quickly if the problem is corrected, avoiding the need for a time-consuming prime mover restart.

Prime Mover Tripping Condition	Indicated or Detected By:
Generator Manual Shutdown	Local or Remote Bit Operation
Generator Fault	Neutral Overcurrent Elements, 51NT or 50N1T 100% Stator Ground Fault Elements, 64G1T or 64G2T Current Differential Elements, 87R or 87U Ground Current Differential Elements, 87N1T or 87N2T
Prolonged System Fault (Backup Tripping)	Voltage Controlled Time-Overcurrent Element, 51CT Voltage Restrained Time-Overcurrent Element, 51VT Mho Phase Distance Elements, Z1P1T, Z1P2T
Generator Inadvertent Energization	Inadvertent Energization Detected, INADT

Generator Lockout Relay Trip, TR4

The generator lockout relay is tripped in the event of a generator fault. Typically, the lockout relay contacts prevent the generator breaker from being put back in service until the lockout relay has been reset. This would be done after the operation had been reviewed and, if necessary, the generator inspected to ensure that it could be returned to service safely.

Lockout Relay Tripping Condition	Indicated or Detected By:
Generator Fault	Neutral Overcurrent Elements, 51NT or 50N1T 100% Stator Ground Fault Elements, 64G1T or 64G2T Current Differential Elements, 87R or 87U Ground Current Differential Elements, 87N1T or 87N2T
Prolonged System Fault (Backup Tripping)	Voltage Controlled Time-Overcurrent Element, 51CT Voltage Restrained Time-Overcurrent Element, 51VT Mho Phase Distance Elements, Z1P1T, Z1P2T
Generator Inadvertent Energization	Inadvertent Energization Detected, INADT
Generator Manual Shutdown	Local or Remote Bit Operation and Low-Forward Power Condition Detected

Factory Default Tripping Logic

Review of the tables above shows that each of the controlled devices has tripping conditions in common. For instance, all of the devices are tripped in response to a generator fault. To simplify the relay settings, we have assigned nondedicated SELOGIC control equation variables to collect conditions that are used in more than one tripping equation. These settings are summarized and described below.

Generator Fault, Prolonged System Fault, Inadvertent Energization, and Manual Trips

SELOGIC control equation variable 3 is used to indicate generator faults, prolonged system faults, inadvertent generator energization, and manual sequential trips:

SV3 = 64G1T + 64G2T + 51NT + 50N1T + 51CT + 51VT + INADT + LT1*32P2T[a]

[a]Add +87R + 87U to the SV3 variable to obtain percentage restrained differential element tripping.
Add +87N1T + 87N2T to the SV3 variable to obtain ground current differential tripping.
Add +21P1T + 21P2T + 21C1T + 21C2T to obtain Zone 1 and Zone 2 distance tripping.

SELOGIC Control Equation Term	Asserts to Indicate:
64G1T	Generator stator ground fault detected by neutral overvoltage.
64G2T	Generator stator ground fault detected by third-harmonic voltage differential.
51NT + 50N1T	Ground fault detected by neutral time-overcurrent element or neutral definite-time overcurrent element.
51CT + 51VT	Prolonged system fault detected by voltage controlled phase time-overcurrent or voltage restrained phase time-overcurrent.
INADT	Inadvertent generator energization detected.
LT1*32P2T	Generator manual trip through latch bit LT1 and low-forward power element 32P2T.

Generator Abnormal Operating Conditions

SELOGIC control equation variable 4 is used to indicate generator abnormal operating conditions:

SV4 = 24C2T + 32P1T + 40Z1T + 40Z2T

SELOGIC Control Equation Term	Asserts to Indicate:
24C2T	Generator overexcitation detected by composite volts/hertz element.
32P1T	Generator reverse power condition detected.
40Z1T + 40Z2T	Generator loss-of-field detected by Zone 1 or Zone 2 loss-of-field element (SV1T term also may be added if positive offset Zone 2 is applied. See ***Section 2: Relay Element Settings***.)

Generator Main Circuit Breaker Tripping Settings

As described above, TR1 is used to define the generator main circuit breaker tripping conditions:

TR1 = SV3 + SV4 + 46Q2T + 81D1T + 81D2T + OOST

If out-of-step tripping is desired via TR2, TR3, or TR4, modify the equations for TR2, TR3, and TR4 to include Relay Word bit OOST.

TR1 SELOGIC Control Equation Term	Asserts to Indicate:
SV3	Generator fault detected by elements set in SV3 control equation, defined above.
SV4	Generator abnormal operating condition detected by elements set in SV4 SELOGIC control equation, defined above.
46Q2T	Generator current unbalance trip.
81D1T + 81D2T	Generator definite-time underfrequency trip through 81D1T or 81D2T elements.

The trip signal can be released after the generator main breaker is open, as indicated by the three-pole open, 3PO, Relay Word bit.

ULTR1 = 3PO

Generator Field Circuit Breaker Tripping Settings

As described above, TR2 is used to define the generator field circuit breaker tripping conditions:

TR2 = SV3 + SV4

TR2 SELOGIC Control Equation Term	Asserts to Indicate:
SV3	Generator fault detected by elements set in SV3 SELOGIC control equation, defined above.
SV4	Generator abnormal operating conditions detected by elements set in SV4 SELOGIC control equation, defined above.

The trip signal can be released after the tripping conditions are no longer present, as indicated by the inverse of the TR2 tripping condition:

ULTR2 = !TR2

Prime Mover Tripping Settings

As described above, TR3 is used to define the prime mover tripping conditions:

TR3 = SV3 + LT1

TR3 SELOGIC Control Equation Term	Asserts to Indicate:
SV3	Generator fault detected by elements set in SV3 SELOGIC control equation, defined above.
LT1	Manual shutdown initiated by local bit LB1 or remote bit RB1.

The trip signal can be released after the tripping conditions are no longer present, as indicated by the inverse of the TR3 tripping condition:

ULTR3 = !TR3

Generator Lockout Relay Tripping Settings

As described above, TR4 is used to define the generator lockout relay tripping conditions:

TR4 = SV3

TR4 SELOGIC Control Equation Term	Asserts to Indicate:
SV3	Generator fault detected by elements set in SV3 SELOGIC control equation, defined above.

The trip signal can be released after the tripping conditions are no longer present, as indicated by the inverse of the TR4 tripping condition:

ULTR4 = !TR

Program Output Contacts for Tripping

In the factory settings, the results of the trip logic in Figure 4.6 are routed to output contact OUT101, OUT102, OUT103, and OUT104 with the following SELOGIC control equation settings:

OUT101 = TRIP1 Generator Main Circuit Breaker Tripping Contact
OUT102 = TRIP2 Generator Field Circuit Breaker Tripping Contact
OUT103 = TRIP3 Prime Mover Tripping Contact
OUT104 = TRIP4 Generator Lockout Relay Tripping Contact

CLOSE LOGIC

The close logic in Figure 4.8 provides flexible circuit breaker closing with SELOGIC control equation settings:

52A	(breaker status)
CLEN	(CLOSE enable)
CL	(close conditions, other than **CLOSE** command)
ULCL	(unlatch close conditions, other than circuit breaker status)

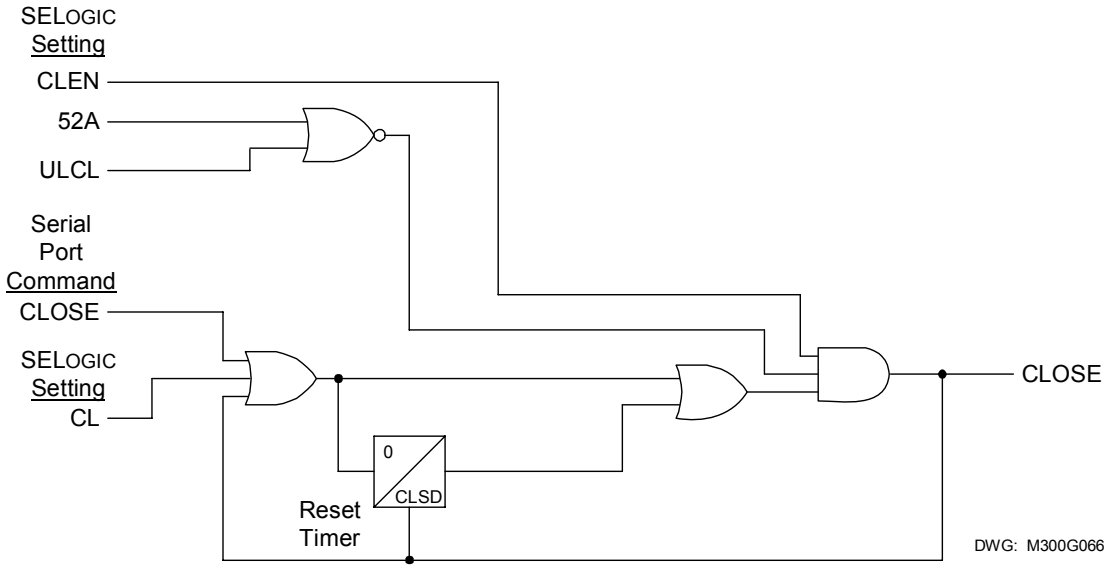

Figure 4.8: Close Logic

Set Close

If **all** the following are true:

The unlatch close condition is not asserted (ULCL = logical 0)

The circuit breaker is open (52A = logical 0)

Closing is enabled (CLEN = logical 1)

Then the CLOSE Relay Word bit can be asserted to logical 1 if any **one** of the following occurs:

The serial communications port **CLOSE** command is executed

SELOGIC control equation setting CL goes from logical 0 to logical 1 (rising-edge transition)

If a serial port **CLOSE** command is executed or CL goes from logical 0 to logical 1 while the CLEN SELOGIC control equation is logical 0, the relay waits for CLSD close dwell time seconds for CLEN to assert. If CLEN asserts before CLSD expires, the CLOSE Relay Word bit asserts to logical 1. If CLEN does not assert before CLSD expires, the CLOSE Relay Word bit does not assert and the logic is reset. This logic permits the CLEN SELOGIC control equation to supervise relay initiated closes. See the Settings Example below.

Unlatch Close

If the CLOSE Relay Word bit is asserted at logical 1, it stays asserted at logical 1 until **one** of the following occurs:

The unlatch close condition asserts (ULCL = logical 1)

The circuit breaker closes (52A = logical 1)

The close enable deasserts (CLEN = logical 0)

Settings Example

Suggested settings for the close logic SELOGIC control equation settings are:

52A	=	IN101	
CL	=	LB2	Permits front-panel close operations via Local bit LB2, OR with INxxx (e.g., IN103) connected to local control switch or SCADA close signal as desired.
CLEN	=	!SV6T + CLOSE	Prevents a second close for 30 seconds and seals-in CLEN. Use !SV6T*25C + CLOSE for synch-check supervised closing.
ULCL	=	TRIP + SV5T	Unlatches CLOSE if relay trips or if CLOSE is asserted for more than 1 second.

•
•
•

SV5	=	CLOSE	
SV5PU	=	1.00	SV5DO = 0.00
SV6	=	CLOSE	
SV6PU	=	0.00	SV6DO = 30.00

The factory setting for the Close Dwell Timer setting is:

CLSD = 0.00 s

A longer CLSD timer setting would be applied if the close logic should remain armed for a time while the generator is synchronized (e.g., synch-check supervised closing).

See the ***Settings Sheets*** at the end of ***Section 6: Enter Relay Settings*** for setting ranges.

Set Close

With the suggested settings, SELOGIC control equation setting CL is set with local bit LB2. Local bit LB2 closes directly (operates as a manual close switch via the front panel). See ***Local Control Switches*** in this section and ***Front-Panel Local Control*** in ***Section 9: Front-Panel Operation*** for more information on local control.

Unlatch Close

With the suggested settings, SELOGIC control equation setting ULCL is set by the TRIP Relay Word bit. This prevents the CLOSE Relay Word bit from being asserted any time the TRIP Relay Word bit is asserted (TRIP takes priority). See ***Trip Logic*** in this section.

SELOGIC control equation setting 52A is set with optoisolated input IN101. Input IN101 is connected to a 52a circuit breaker auxiliary contact. When a closed circuit breaker condition is detected, the CLOSE Relay Word bit is deasserted to logical 0. Setting 52A can handle a 52a or 52b circuit breaker auxiliary contact connected to an optoisolated input.

Defeat the Close Logic

If SELOGIC control equation close enable setting CLEN is set with logical 0 (CLEN = 0), then the close logic is inoperable.

Program an Output Contact for Closing

In the factory settings, the result of the close logic in Figure 4.8 is routed to output contact OUT105 with the following SELOGIC control equation:

OUT105 = CLOSE

SYNCHRONISM CHECKING FUNCTION (MODELS 0300G2 AND 0300G3)

Element Description

Functional Description

A synchronism checking relay is usually used to verify that the generator frequency, voltage magnitude, and phase angle match the system frequency, voltage magnitude, and phase angle before allowing the generator breaker to be closed. The SEL-300G2 and SEL-300G3 Relays provide a built-in synchronism checking function. The relay measures system voltage using the VS voltage input, which you should connect to the secondary of a phase-to-ground or phase-to-phase connected VT on the system side of the generator circuit breaker. If a phase-to-phase connected VT is applied, it should be connected between A- and B-phase or between B- and C-phase. See ***Section 5: Installation*** for additional connection details.

The relay measures the system conditions through the VS input. The relay measures generator frequency using the VA or VAB input. Other generator voltage conditions are determined using the voltage selected by the SYNCP setting, set to match the VS input connection. If the slip frequency (frequency difference between the generator and system) is within settable bounds, both voltage magnitudes are within settable bounds, and the phase-angle difference is desirable, the relay synchronism check function can permit a CLOSE signal to be issued by the SEL-300G or can close an output contact to supervise an external close condition.

The relay takes into account the breaker closing time and the present slip frequency to issue a close signal timed to have the system and generator at a settable angle difference when the breaker closes.

If a generator step-up transformer is connected between the generator terminals and the open generator breaker, the SEL-300G can account for a ±30° phase shift introduced by the transformer connections without using auxiliary transformers.

In the event that the generator breaker is slow to close, the generator and system voltages might drift to a phase angle that is unsafe for closing before the breaker closes. In this event, the relay detects that the phase angle between the generator and system voltages is above a safe closing

angle and can issue a breaker close failure signal to perform breaker failure tripping and protect the generator.

Setting Descriptions

Enable Synchronism Checking (Y, N) E25 = Y

Set E25 = Y to enable synchronism checking elements. If synchronism checking is not required, set E25 = N. When E25 = N, the 59VP, 59VS, GENVHI, GENVLO, GENFHI, GENFLO, VDIF, 25A1, 25A2, 25C, CFA, and BKRCF Relay Word bits are inactive and the following relay settings are hidden and do not need to be entered.

Synch-Check Phase (VA, VB, VC, VAB, VBC) SYNCP = VA

Set SYNCP to indicate which phase the synch voltage VT is connected to. You may use phase-to-ground or phase-to-phase connected VT, regardless of whether open-delta or four-wire wye VTs are used on the generator.

Voltage Window, Low Threshold (20.0 to 200.0 V) 25VLO = 58.3

Voltage Window, High Threshold (20.0 to 200.0 V) 25VHI = 69.7

Maximum Voltage Difference (OFF, 1.0 to 15.0%) 25VDIF = 3.3

The 25VLO and 25VHI settings define the acceptable system (VS) voltage magnitude window prior to closing the generator breaker. 25VHI must be a higher voltage value than 25VLO. The system and generator voltages must both be greater than 25VLO and less than 25VHI for the synch-check outputs to operate. The 25VDIF setting defines the maximum acceptable percentage magnitude difference between the system and generator voltages prior to closing the generator breaker. See Figure 4.10 and Figure 4.11 for more detail.

Generator Voltage High Required (Y, N) GENV+ = Y

If your synchronization practice requires that the generator voltage be higher than the system voltage prior to closing the generator breaker, set GENV+ = Y. If not, set GENV+ = N.

Voltage Ratio Correction Factor (0.500 to 2.00) 25RCF = 1.000

Use the 25RCF setting to null differences between the system and generator voltage transformer ratios. Normally, the 25RCF setting should be close to 1.000. Use the instructions below to determine whether a non-unity setting should be used in your application.

Minimum Slip Frequency (–1.00 to 0.99 Hz) 25SLO = 0.05

Maximum Slip Frequency (–0.99 to 1.00 Hz) 25SHI = 0.10

The 25SLO and 25SHI settings define the acceptable slip frequency between the system and the generator prior to closing the generator breaker. 25SHI must be greater than 25SLO. The SEL-300G defines slip frequency greater than 0 Hz when the generator frequency is greater than the system frequency.

Transformer Compensation Angle (0, +30°, –30°) COMPA = 0

Use the COMPA setting to compensate for the phase angle shift introduced by a generator step-up transformer connected between the generator terminals and the open generator breaker. When there is no transformer, set COMPA = 0. When there is a transformer and the system phase-neutral voltage phase angle leads the generator phase-

neutral voltage phase angle by 30°, set COMPA = –30°. When the system phase-neutral voltage phase angle lags the generator phase-neutral voltage phase angle by 30°, set COMPA = 30°.

Maximum Angle 1 (0 to 80°) 25ANG1 = 5

The 25ANG1 setting defines an acceptable generator breaker closing angle. The relay asserts the 25A1 Relay Word bit when the generator voltage is within 25ANG1 degrees of the system voltage if the other supervisory conditions also are met. When the breaker close time setting, TCLOSD, is nonzero, the relay accounts for the breaker time and present slip frequency to adjust the phase angles where 25A1 is asserted.

Maximum Angle 2 (0 to 80°) 25ANG2 = 15

The 25ANG2 setting also defines an acceptable generator breaker closing angle. The relay asserts the 25A2 Relay Word bit when the generator voltage is within 25ANG2 degrees of the system voltage if the other supervisory conditions also are met. The relay does not account for the breaker time or present slip frequency to adjust the phase angles where 25A2 is asserted; it is an absolute phase angle comparison.

Target Close Angle (–15 to +15°) CANGLE = –3

The CANGLE setting defines a target closing angle (positive angle indicates VS lagging SYNCP voltage). When the balance of supervisory conditions are satisfied (slip, voltage window, voltage difference) the synch-check function accounts for the present slip and the set TCLOSD time (if not equal to zero). The relay asserts the 25C Relay Word bit for 1/4 cycle to initiate a close. 25C assertion is timed so that, if the slip remains constant and the breaker closes in TCLOSD seconds, the breaker closes when the angle difference is equal to CANGLE.

Breaker Close Time (0.000 to 1.000 s) TCLOSD = 0.150

The TCLOSD setting predicts the amount of time that it will take for the generator main breaker to close, from the instant the SEL-300G CLOSE contact closes, to the instant the breaker main contacts close. Enter a value that is as accurate as possible to obtain best performance of the 25C close initiating Relay Word bit.

Close Fail Angle (OFF, 3 to 120°) CFANGL = 30

If the relay initiates a closure using the 25C Relay Word bit, and the breaker has not closed when the phase angle difference between the generator and system reaches the CFANGL setting, the relay asserts the BKRCF breaker close failure Relay Word bit. This Relay Word bit typically would be used to close a relay output contact to energize the bus lockout relay. The bus lockout relay would trip all breakers connected to the bus, protecting the generator from the out-of-synchronism close.

Dead-Bus Undervoltage (OFF, 0.1 to 200.0 V) 27VSP = 15.0

The 27VSP setting defines pickup level of the undervoltage element for the synch voltage input. The element is available for general-purpose use as desired; it is not used in the default configuration of the SEL-300G.

Block Synch Check (SELOGIC control equation) BSYNCH = !3PO

The synch-check function is blocked when the BSYNCH SELOGIC control equation result equals logical 1. The function is allowed to operate when the BSYNCH SELOGIC control equation result equals logical 0. Typically, the BSYNCH SELOGIC control equation should be set so the function is blocked when the generator main

circuit breaker is closed (!3PO). Other supervisory conditions may be added if your application requires.

Relay Word Bits

Relay Word Bit	Function Description	Typical Applications
59VP	Generator Terminal Voltage Within Voltage Window	Indication, Testing
59VS	System Voltage Within Voltage Window	Indication, Testing
GENVHI	Generator Voltage Greater Than System Voltage	Indication, Testing
GENVLO	Generator Voltage Less Than System Voltage	Indication, Testing
VDIF	Generator and System Voltage Difference Within Acceptable Bounds	Indication, Testing
GENFHI	Slip Frequency Greater Than 25SHI Setting	Indication, Testing
GENFLO	Slip Frequency Less Than 25SLO Setting	Indication, Testing
SF	Slip Frequency Within Acceptable Bounds	Indication, Testing
25A1	Slip/Breaker-Time Compensated Phase Angle Within 25ANG1 Setting	Indication, Testing, Control
25A2	Uncompensated Phase Angle Within 25ANG2 Setting	Indication, Testing, Control
25C	Initiate CLOSE to Match Target Close Angle	Indication, Testing, Control
CFA	Close Failure Angle Condition	Testing
BKRCF	Breaker Close Failed	Control, Testing
27VS	Synch Undervoltage Pickup	Indication, Control

Setting Calculation

Information Needed

CAUTION

Synchronism checking requirements and practices vary widely for different prime mover types. Be sure to consult your prime mover manufacturer's synchronism checking guidelines as you prepare these settings or severe equipment damage or loss of equipment life may result.

Prime Mover Manufacturer Synchronization Guidelines

Synch VT Connection and Transformer Ratio

Generator VT Connection and Transformer Ratio

Generator Breaker Closing Time

Generator Step-Up Transformer Winding Turns Ratio and Connection (only required if the transformer is connected between the generator VTs and the synch VT)

Recommendations

Set the SYNCP setting to indicate the phase(s) to which the synch-check voltage transformer is connected on the system side of the generator circuit breaker. For instance, if the synch VT is connected from A-phase to neutral, set SYNCP = VA. If the synch VT is connect from B-phase to C-phase, set SYNCP = VBC. The relay does not require that the synch VT be connected in the same manner that the generator VTs are. For instance, you can elect to use open-delta connected VTs on the generator (setting DELTA_Y = D) and a phase-to-neutral connected VT on the system. If a phase-to-phase connected VT is used on the system side, it must be connected B-phase to C-phase or A-phase to B-phase.

Use the 25VLO, 25VHI, 25VDIF, and GENV+ settings to define the voltage conditions under which the generator breaker may be closed safely. The 25VLO and 25VHI settings define an acceptable voltage magnitude window. A close is not permitted if the generator or system voltages are less than 25VLO or greater than 25VHI.

Make the 25VLO and 25VHI settings based on the secondary magnitude of VS. For instance, if a close is acceptable while the system voltage ranges from 90 percent to 105 percent of nominal, if the synch PT is connected phase-to-neutral and the nominal line-to-neutral voltage is 67 V secondary, then

25VLO = 0.9 • 67 V secondary = 60.3 V secondary

25VHI = 1.05 • 67 V secondary = 70.4 V secondary

When a phase-to-phase connected synch VT is used, the nominal phase-to-phase voltage would probably be approximately 120 V secondary, leading to

25VLO = 0.9 • 120 V secondary = 108 V secondary

25VHI = 1.05 • 120 V secondary = 126 V secondary

The 25VDIF setting defines a maximum acceptable percentage difference between the generator and system voltages. GENV+ defines whether the generator voltage must be greater than the system voltage. Setting 25VDIF = OFF disables this supervision and permits a close when both voltages are within the voltage window defined by 25VLO and 25VHI.

For instance, the generator and prime mover manufacturer may recommend that the generator voltage be between 0 percent and +3 percent of the system voltage when the generator breaker is closed. In that case, set 25VDIF = 3% and GENV+ = Y. If a close is permitted when the generator voltage is within ±5 percent of the system voltage, set 25VDIF = 5% and GENV+ = N.

The 25RCF setting compensates magnitude differences between the synch voltage and the generator voltage. Magnitude differences may be introduced by unmatched or slightly erroneous voltage transformer or step-up transformer ratios.

Set 25RCF using the equation below:

$$25RCF = \frac{(tvr \bullet PTR)}{PTRS}$$

where

tvr	= step-up transformer voltage ratio (HV/LV)
tvr	= 1 when no step-up transformer is present
PTR	= generator voltage transformer ratio to 1
PTRS	= synch voltage transformer ratio to 1

Figure 4.9 shows four possible generator/transformer/VT configurations and the associated settings and calculations.

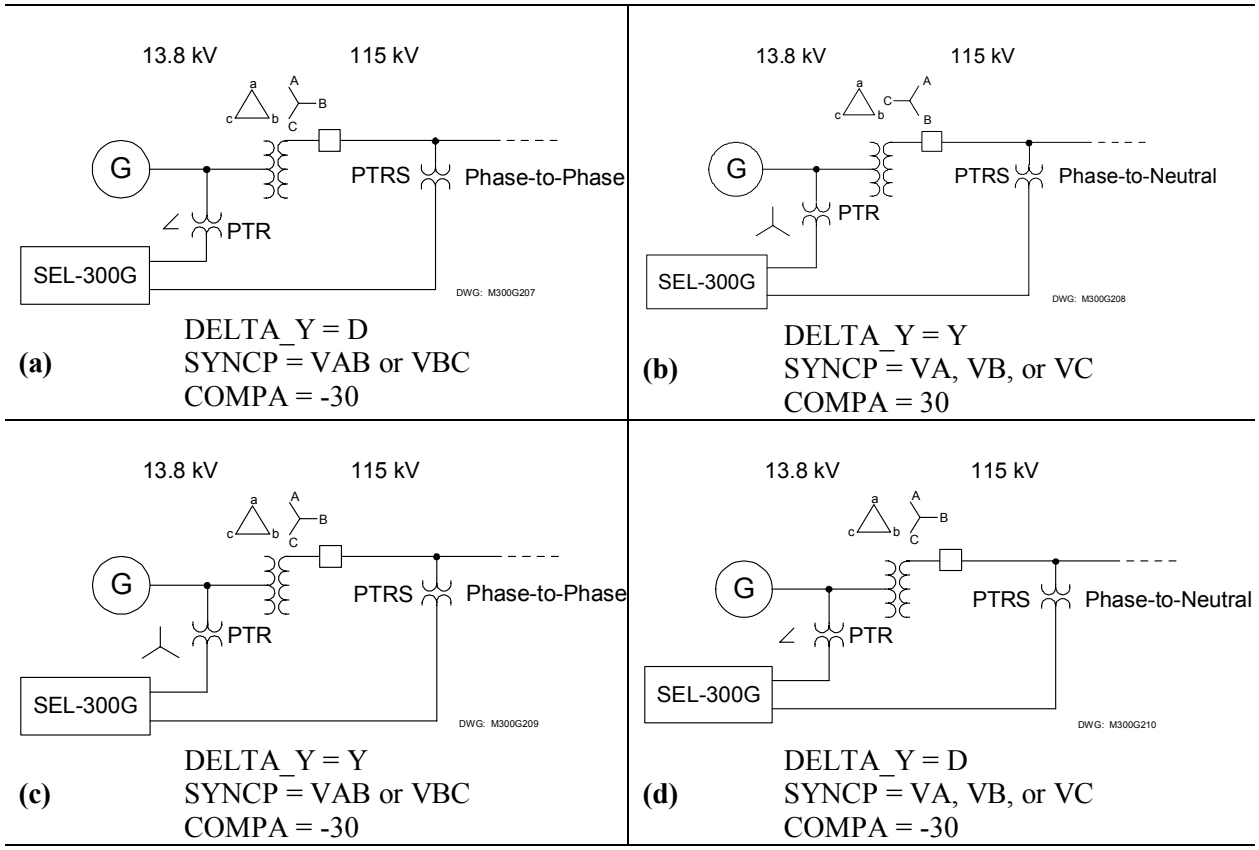

For all cases:

$$25RCF = \frac{tvr \cdot PTR}{PTRS} \qquad PTR = 115 \qquad PTRS = 1000 \qquad tvr = \frac{115}{13.8} = 8.333 \qquad 25RCF = \frac{(8.33)\cdot(115)}{(1000)} = 0.958$$

Figure 4.9: Synch-Check Function 25RCF Setting Examples

After the relay has been placed in service and the generator breaker closed, you may wish to refine the 25RCF setting to account for transformer ratio errors. Use the procedure in the ***Manually Refine the 25RCF Setting While the Generator is in Service*** section on page 4-29 to refine the 25RCF setting manually.

The 25SLO and 25SHI settings define the minimum and maximum acceptable slip frequency for a generator breaker close. 25SLO must be set less than 25SHI. The SEL-300G defines the slip frequency positive when the generator frequency is higher than the system frequency.

Some large steam turbine generators require that a low, positive slip be present when the generator breaker is closed. Setting 25SLO = 0.05 Hz and 25SHI = 0.25 Hz might satisfy that requirement.

Diesel generators may require that a zero or negative slip be present. This tends to unload the machine shaft and crank briefly when the generator breaker closes. Setting 25SLO = –0.25 Hz and 25SHI = 0.0 Hz might satisfy this requirement.

The COMPA setting allows the relay to compensate for a transformer-introduced ±30° phase shift between the generator VTs and the synch VT. In most applications, the VTs will only have the open circuit breaker between them and in these cases, COMPA = 0°.

When a generator step-up transformer resides between the generator VTs and synch VT, examine the connections to determine the lead-lag relationship between the generator and system voltages. When the system voltage leads the generator voltage by 30°, set COMPA = –30. When the system voltage lags the generator voltage by 30°, set COMPA = 30.

The SEL-300G synch-check function provides three methods to supervise internal and external close signals. Relay Word bits 25A1, 25A2, and 25C assert for different generator and system voltage phase angles, but all are supervised by the voltage magnitude and difference and slip frequency limits.

The relay uses two phase-angle calculations to control the 25A2, 25A1, and 25C Relay Word bits. The first phase-angle calculation is the absolute phase-angle difference between the generator and system voltages. The next phase-angle calculation adjusts the absolute phase-angle difference by an angle value that is the phase angle the system will travel through in TCLOSD seconds, assuming that the present slip frequency remains constant. This slip compensated phase angle predicts the phase-angle difference when the breaker closes if a close were issued at this instant and if the breaker closed in TCLOSD seconds.

The 25A2 Relay Word bit asserts when the absolute phase-angle difference is less than the 25ANG2 setting.

Relay Word bit 25A1 asserts when the slip-compensated phase-angle difference is less than the 25ANG1 setting.

The 25C Relay Word bit asserts when the slip-compensated phase-angle difference is equal to the CANGLE setting. When you would like to initiate a generator breaker close, timed so the phase-angle difference will equal the CANGLE setting, supervise the CLOSE initiation with the 25C Relay Word bit.

Settings for 25ANG1, 25ANG2, and CANGLE depend on the requirements of the application.

Set TCLOSD equal to the circuit breaker closing time in seconds. This value is used to calculate the slip-compensated phase-angle difference between the generator and system voltages, as described above. If there are interposing relays between the SEL-300G CLOSE output and the circuit breaker close coil, add the operating time of these components to the breaker's own closing time to calculate the TCLOSD setting.

Large generators can sustain serious damage if the generator circuit breaker closes while there is a large phase-angle difference between the generator voltage and the system voltage. Synch-check relays help prevent this occurrence. However, if the circuit breaker is slow to close, the generator slip frequency can cause the generator voltage to rotate away from the system voltage, increasing the phase-angle difference to dangerous levels. At this point it is not possible to trip the slowly closing breaker; but if the breaker does close eventually, it could badly damage the generator or reduce its life. To prevent this, a breaker failure lockout signal can be used to clear the generator bus. This removes system voltage from the outboard side of the circuit breaker so if the breaker does close, it only energizes a dead bus.

The SEL-300G synch-check function includes breaker slow close detection logic. If a circuit breaker close is initiated by the relay, the breaker close failure logic is armed. If the breaker closes, the 3PO Relay Word bit deasserts and the logic is disarmed. If the breaker does not close

and the generator voltage rotates to greater than the close failure angle, CFANGL, the relay asserts the BKRCF circuit breaker close failure Relay Word bit. This Relay Word bit would be applied to trip the bus lockout relay. If some type of control failure occurs that prevents the generator breaker from closing, the breaker close failure logic is disarmed automatically after 99 seconds, as long as the generator voltage does not enter the close failure region.

If breaker close failure protection is not desired, set CFANGL = Off. If breaker close failure protection is desired, first determine the phase angle difference at which generator or prime mover damage can occur.

Damage Angle = _____°

Next, calculate the phase angle that the generator will rotate through while the generator bus is being cleared if a close failure occurs at maximum slip. Use the equation below:

Angle Rotation = Bus clearing time • 25Sxx • 360 degrees

where

Bus clearing time	= time in seconds for all breakers connected to the generator bus to open in the event of a breaker failure lockout relay operation
25Sxx	= maximum acceptable slip frequency. This value will be equal to the absolute value of 25SHI or 25SLO, whichever is larger.
Angle Rotation	= _____°

Set CFANGL less than or equal to:

CFANGL = Damage Angle° – Angle Rotation°

CFANGL = _____°

The BSYNCH SELOGIC control equation should be set to block the synch-check function whenever the generator circuit breaker is closed and during other conditions that you select.

Manually Refine the 25RCF Setting While the Generator is in Service

Once the generator is in service and the generator breaker is closed, you may wish to refine the 25RCF setting. The refinement removes the effect of differences between the actual voltage transformer ratios and the nameplate markings. These differences should be small, but they may be additive and therefore significant. To refine the 25RCF setting, take the following steps:

Step 1. Using the front-panel interface or a PC connected to a relay serial port, use the **SHOWSET** and **SHOWSET G** commands to review the relay settings. Note the values of the following settings:

PTR	=	_____	
PTRS	=	_____	
SYNCP	=	_____	
25RCF	=	_____	
DELTA_Y	=	_____	(global setting, review using SHOWSET G)

Step 2. With the generator running and the generator main circuit breaker closed, reduce the generator load current as low as possible. This is particularly important when a step-up transformer is connected between the generator VTs and the synch VT, as in Figure 4.9.

Step 3. Using the front-panel or serial port **METER** command, determine the magnitude of VS:

VS = _____ kV primary

Step 4. Depending on the SYNCP and DELTA_Y settings, note the appropriate generator voltage, as shown below:

When SYNCP = VA, VB, or VC and DELTA_Y = Y, record the phase voltage named by the SYNCP setting:

V__ = _____ kV primary

When SYNCP = VAB or VBC and DELTA_Y = D, record the phase-to-phase voltage named by the SYNCP setting:

V__ = _____ kV primary

When SYNCP = VAB or VBC and DELTA_Y = Y, record the magnitude and phase angle of the two phase voltages named by the SYNCP setting. For instance, when SYNCP = VAB, record VA and VB:

V__ = _____ kV primary _____ degrees

V__ = _____ kV primary _____ degrees

Using a scientific calculator and accounting for the phase angles, subtract the second voltage from the first, then note the magnitude of the phase-to-phase voltage:

V__ = _____ kV primary

When SYNCP = VA, VB, or VC and DELTA_Y = D, record the magnitude of V1:

V1 = _____ kV primary

Step 5. Calculate the secondary magnitude of VS by dividing the primary value noted in Step 3 by the PTRS setting noted in Step 2:

VSs = VS/PTRS = _____ V secondary

Step 6. Calculate the secondary magnitude of the generator voltage noted in Step 4 by dividing that magnitude by the PTR setting:

VP = V (from Step 4)/PTR = _____ V secondary

Step 7. Calculate a refined 25RCF setting by dividing VSs by VP:

25RCF = VSs/VP = _____

Step 8. If the 25RCF value calculated in Step 7 varies from the 25RCF setting noted in Step 1, you may wish to enter the new value as a new 25RCF setting to improve the accuracy of the synch-check voltage acceptance logic.

Synch-Check Supervised Closing

The 25C, 25A1, and 25A2 Relay Word bits are available to supervise the internal Close Logic or external devices. The most convenient method to apply the synch-check function is to use one of the resulting Relay Word bits to enable the SEL-300G CLOSE output by setting the synch-check Relay Word bit in the CLEN, CLOSE Enable SELOGIC control equation. The following description applies to the ***Settings Example*** shown earlier under ***Close Logic***.

Arm the closing logic by applying dc voltage to input IN103 with a momentary switch. When CL asserts, the relay closing logic is armed. We will assume that the breaker is open, the synch-check function is active (BSYNCH = logical 0), and an external automatic or manual synchronizer is operating to bring the generator into synchronism. When the SEL-300G synch-check function determines that the conditions are acceptable, the 25C Relay Word bit asserts. Since !SV6T is already logical 1, !SV6T*25C will assert to initiate the close as long as the CLSD timer has not expired. Thus, the CLSD timer should be set longer than the maximum amount of time required to synchronize the generator.

Refer to ***Close Logic*** on page 4-20 of this section for more detail regarding the closing logic and settings.

Element Operating Characteristics

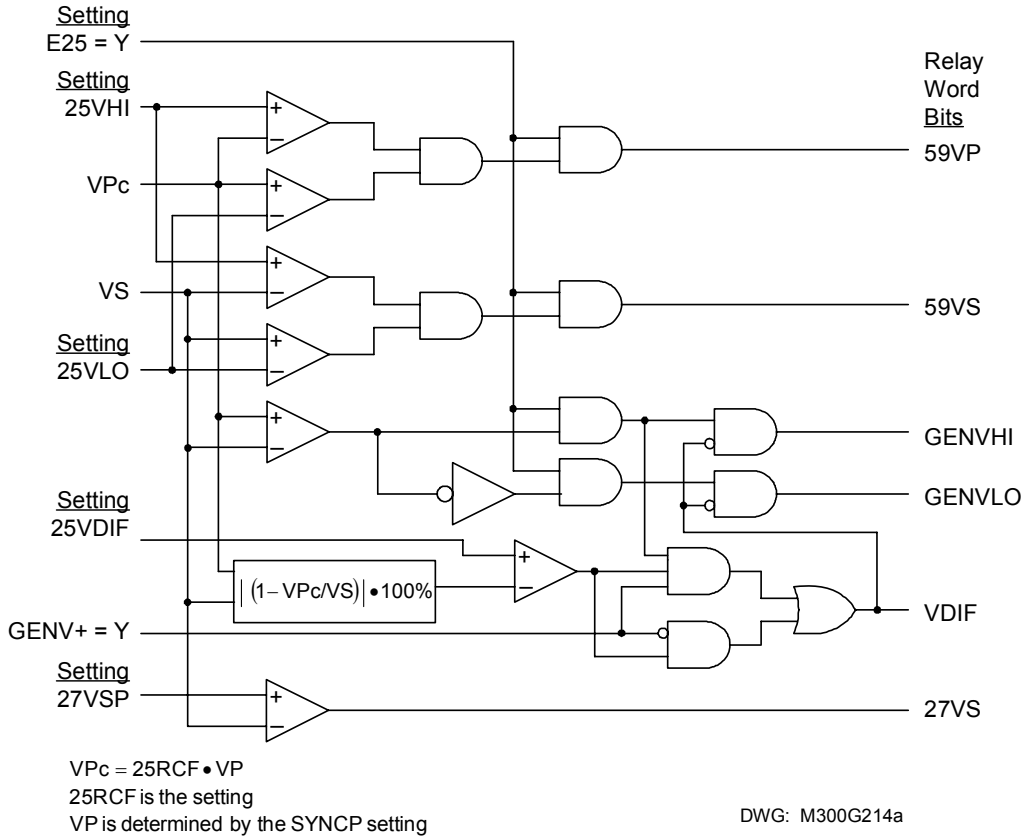

Figure 4.10: Synch-Check Function Voltage Elements

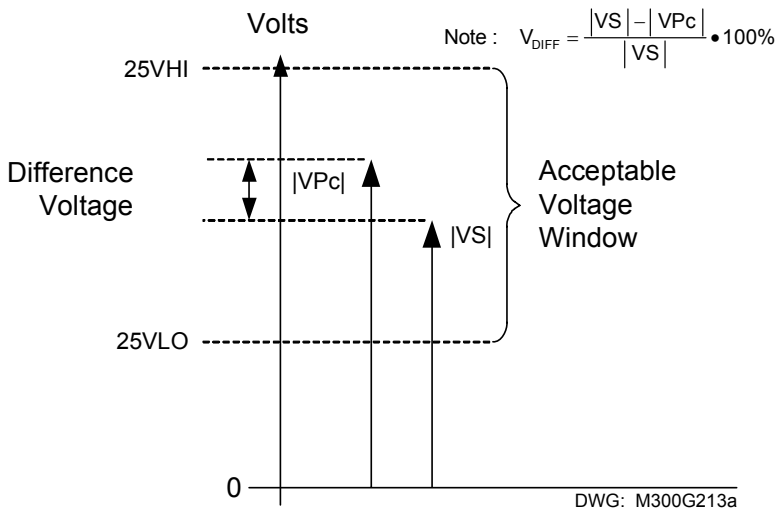

Figure 4.11: Synch-Check Function Voltage Element Characteristic

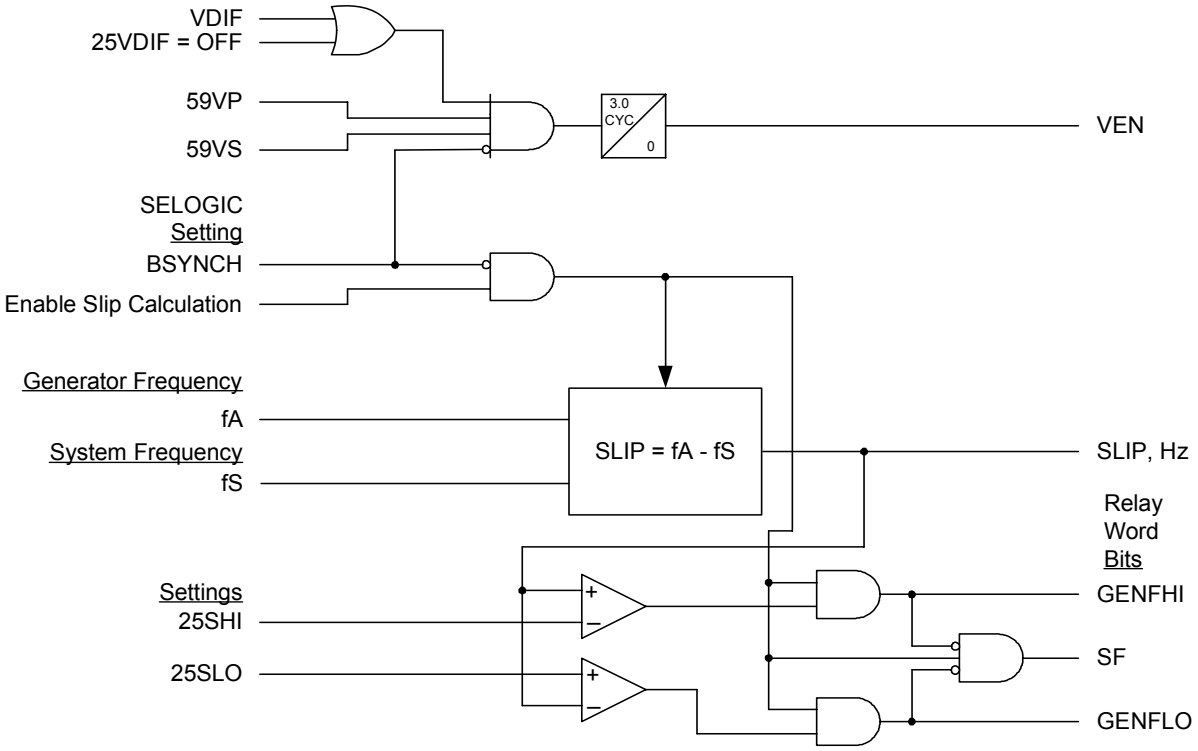

Figure 4.12: Synch-Check Function Slip Elements

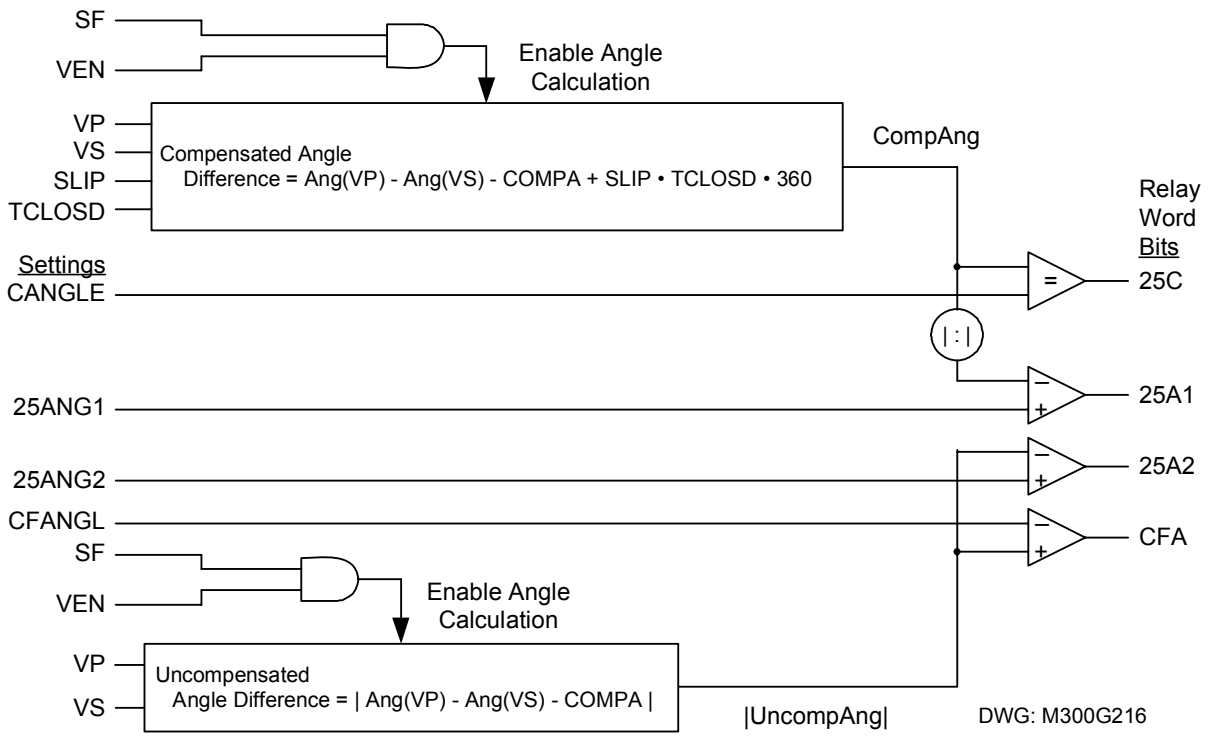

Figure 4.13: Synch-Check Function Angle Elements

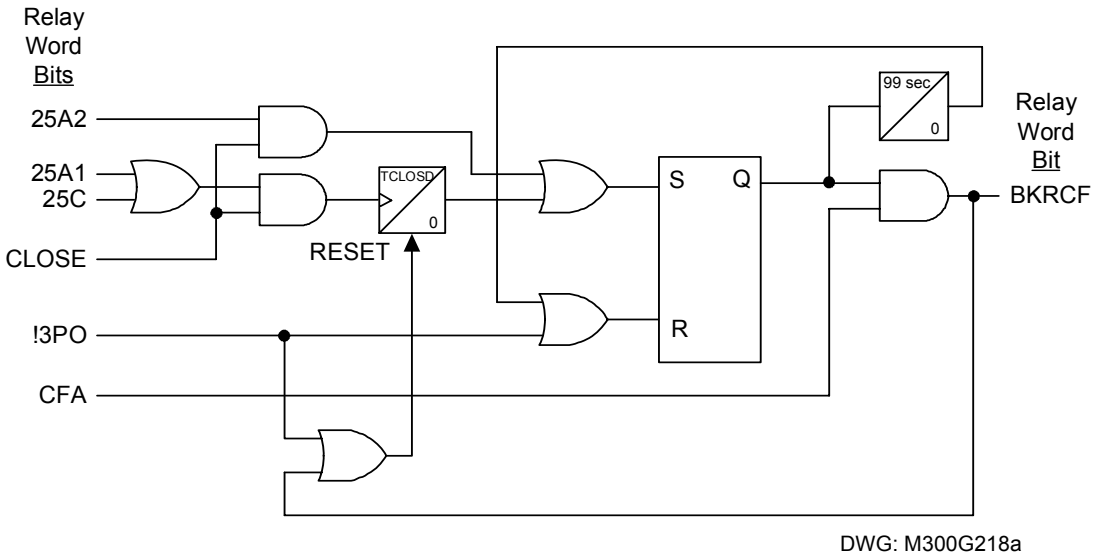

Figure 4.14: Breaker Close Failure Logic Diagram

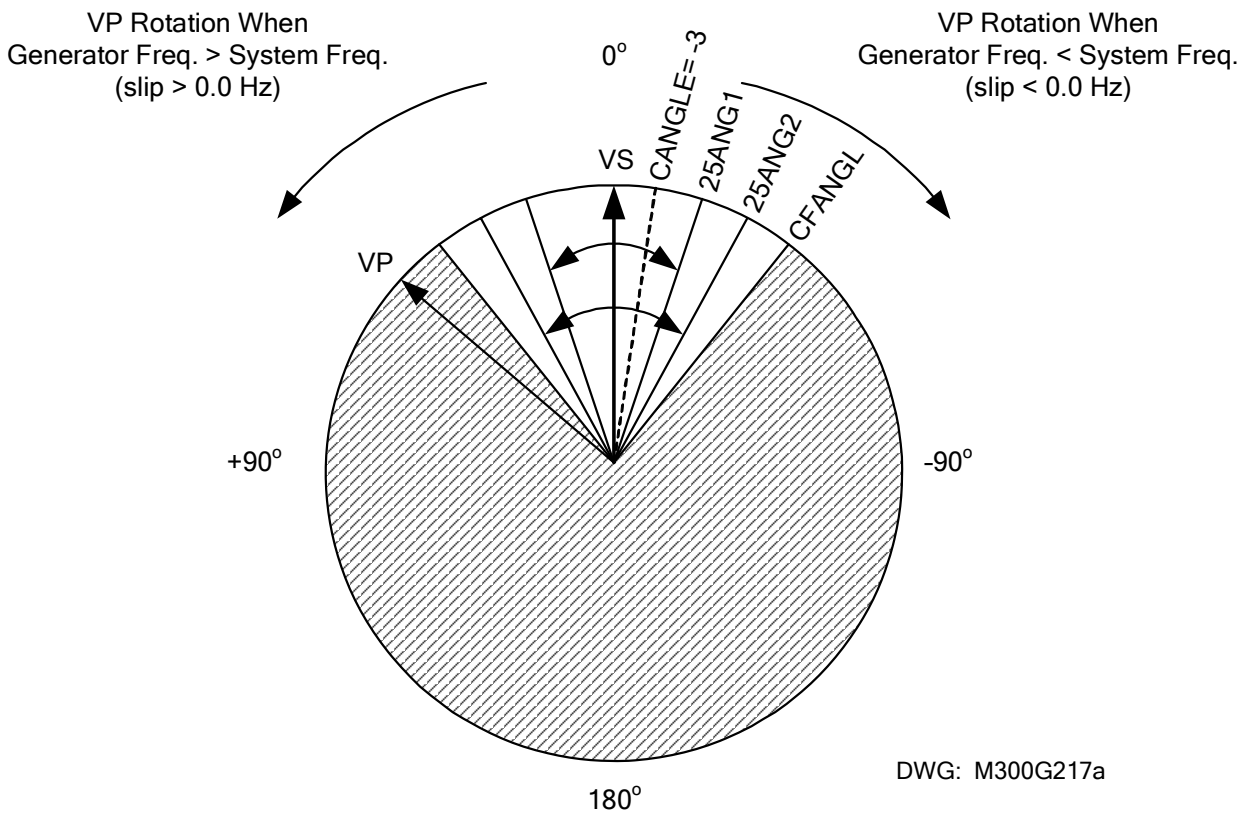

Figure 4.15: Synch-Check Function Angle Characteristics

ER CONTROL EQUATION

The programmable SELOGIC control equation event report trigger setting ER is set to trigger standard event reports for conditions other than trip conditions. When setting ER sees a logical 0 to logical 1 transition, it generates an event report (if the SEL-300G is not already generating a report that encompasses the new transition). The factory setting is:

ER = /24C2 + /32P1 + /46Q2 + /51N + /51C + /51V + /64G1 + /64G2
+ /60LOP + /81D1 + /81D2 + \81D1 + \81D2 + /BNDA + /BNDT + /INAD

Note the rising-edge operator, /, in front of each of these elements. Rising-edge operators are especially useful in generating an event report at fault inception and then generating another later if a breaker failure condition occurs. For example, at the inception of a stator ground fault, pickup indicator 64G1 asserts and an event report is generated:

ER = ... + /64G1 + ... = logical 1 (for one processing interval)

Even though the 64G1 pickup indicator will remain asserted for the duration of the ground fault, the rising-edge operator, /, in front of 64G1 (/64G1) causes setting ER to be asserted for only one processing interval.

Falling-edge operators, \, are also used to generate event reports.

Note: Continued chattering of the ER can result in loss of some event triggers. Use the following SELOGIC when elements used in the ER equation are prone to chatter in your application (e.g., 24C2, 32P1):

SV6 = !SV6T * (24C2 + 32P1)

SV6PU = 0.00 second

SV6DO = 7.00 seconds

ER = /SV6T + ...

- Replace /24C2 + /32P1 by /SV6T in the ER equation. The example uses SV6 but any available variable can be used.
- SV6DO setting determines the period during which chattering of the (24C2 + 32P1) will not trigger additional events.
- Other elements prone to chattering can be ORed with (24C2 + 32P1) in the SV6 equation.

OUTPUT CONTACT CONTROL

Figure 4.16 and Figure 4.17 show the example operation of output contact Relay Word bits due to:

SELOGIC control equation operation

or

PULSE command execution

The output contact Relay Word bits in turn control the output contacts.

Alarm logic/circuitry controls the ALARM output contact.

Figure 4.16 is used for the following discussion/examples. The output contacts in Figure 4.16 and Figure 4.17 operate similarly.

Factory Settings Example

In the factory SELOGIC control equation settings, seven output contacts are used:

OUT101	=	TRIP1	Generator Main Circuit Breaker Trip
OUT102	=	TRIP2	Generator Field Circuit Breaker Trip
OUT103	=	TRIP3	Prime Mover Trip
OUT104	=	TRIP4	Generator Lockout Relay Trip
OUT105	=	CLOSE	Generator Main Breaker Close
OUT106	=	60LOP	Loss-of-Potential Annunciation
OUT107	=	24D1T + 46Q1T + BCW + BNDT +!(DCLO * DCHI)	Operation alarm contact

Operation of Output Contacts for Different Output Contact Types

Output Contacts OUT101 Through OUT107 (All Models) and OUT201 Through OUT212

Refer to Figure 4.16 and Figure 4.17.

The execution of the serial port command **PULSE *n*** (*n* = OUT101 through OUT212) asserts the corresponding Relay Word bit (OUT101 through OUT212) to logical 1. The assertion of SELOGIC control equation setting OUT*m* (*m* = 101 through 212) to logical 1 also asserts the corresponding Relay Word bit OUT*m* (*m* = 101 through 212) to logical 1.

The assertion of Relay Word bit OUT*m* (*m* = 101 through 212) to logical 1 causes the energization of the corresponding output contact OUT*m* coil. Depending on the contact type (a or b), the output contact closes or opens as demonstrated in Figure 4.16. An "a" type output contact is open when the output contact coil is de-energized and closed when the output contact coil is energized. A "b" type output contact is closed when the output contact coil is de-energized and open when the output contact coil is energized.

Notice in Figure 4.16 that all four possible combinations of output contact coil states (energized or de-energized) and output contact types (a or b) are demonstrated. See ***Output Contact Jumpers*** in ***Section 5: Installation*** for output contact type options.

Output contact pickup/dropout time is 4 ms.

ALARM Output Contact

Refer to Figure 4.16 and ***Relay Self-Test Alarms*** in this section.

When the relay is operational, the ALARM output contact coil is energized. The alarm logic/circuitry keeps the ALARM output contact coil energized. Depending on the ALARM output contact type (a or b), the ALARM output contact closes or opens as demonstrated in Figure 4.16. An "a" type output contact is open when the output contact coil is de-energized and closed when the output contact coil is energized. A "b" type output contact is closed when the output contact coil is de-energized and open when the output contact coil is energized.

To verify ALARM output contact mechanical integrity, execute the serial port command **PULSE** ALARM. Execution of this command momentarily de-energizes the ALARM output contact coil.

The Relay Word bit ALARM is deasserted to logical 0 when the relay is operational. When the serial port command **PULSE ALARM** is executed, the ALARM Relay Word bit momentarily asserts to logical 1. Also, when the relay enters Access Level 2, the ALARM Relay Word bit momentarily asserts to logical 1 (and the ALARM output contact coil is de-energized momentarily).

Notice in Figure 4.16 that all possible combinations of ALARM output contact coil states (energized or de-energized) and output contact types (a or b) are demonstrated. See ***Output Contact Jumpers*** in ***Section 5: Installation*** for output contact type options.

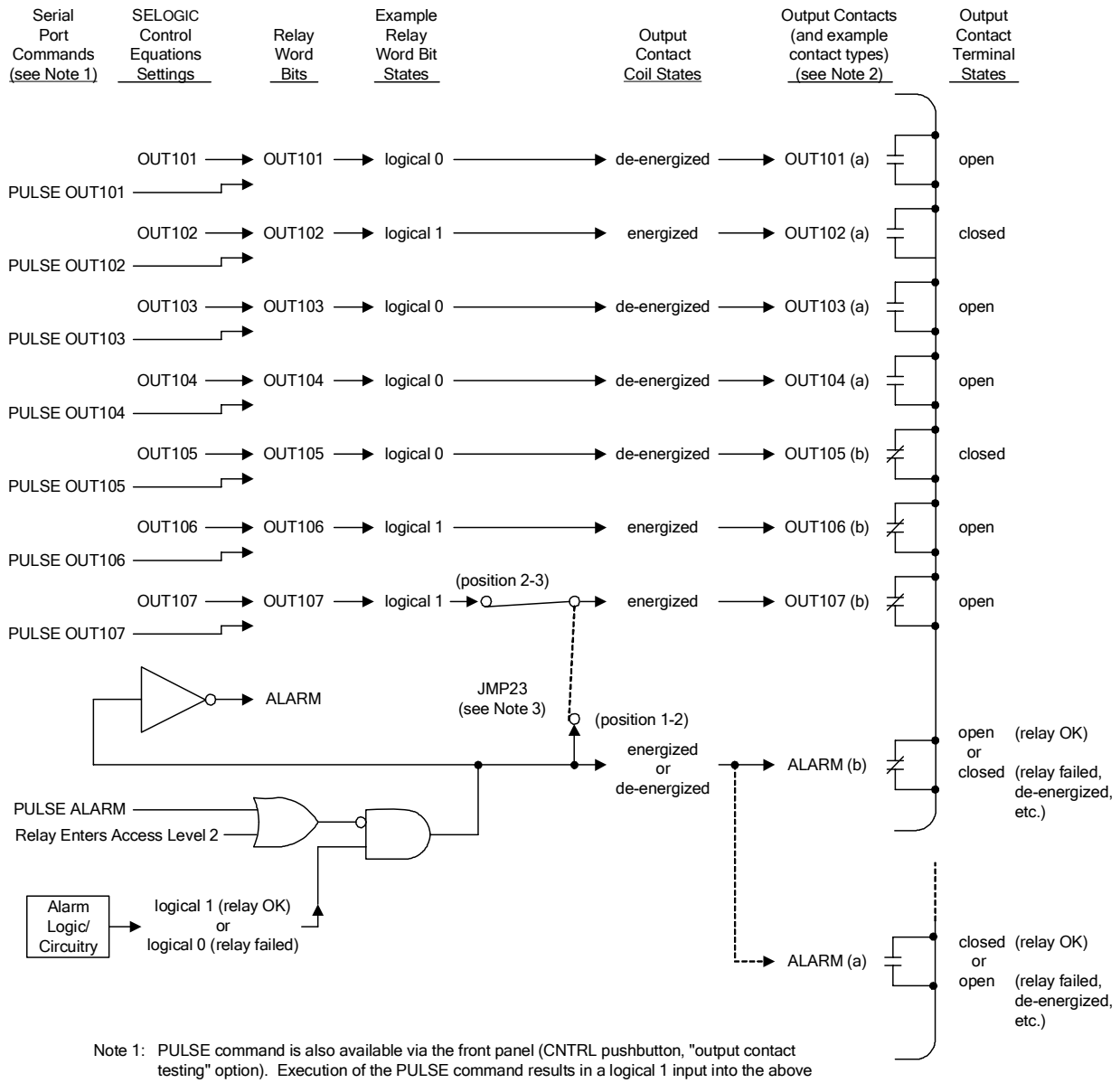

Note 1: PULSE command is also available via the front panel (CNTRL pushbutton, "output contact testing" option). Execution of the PULSE command results in a logical 1 input into the above logic (1-second default pulse width).

Note 2: Output contacts OUT101 through ALARM are configurable as "a" or "b" type output contacts. See Figure 5.25 in *Section 5: Installation* for more information on selecting output contact type.

Note 3: Main board jumper JMP23 allows output contact OUT107 to operate as:
-- regular output contact OUT107 (JMP23 in position 2-3)
-- an extra Alarm output contact (JMP23 in position 1-2)
See Figure 5.25 and Table 5.3 in *Section 5: Installation* for more information on jumper JMP23.

DWG: M300G081a

Figure 4.16: Logic Flow for Example Output Contact Operation (All Models)

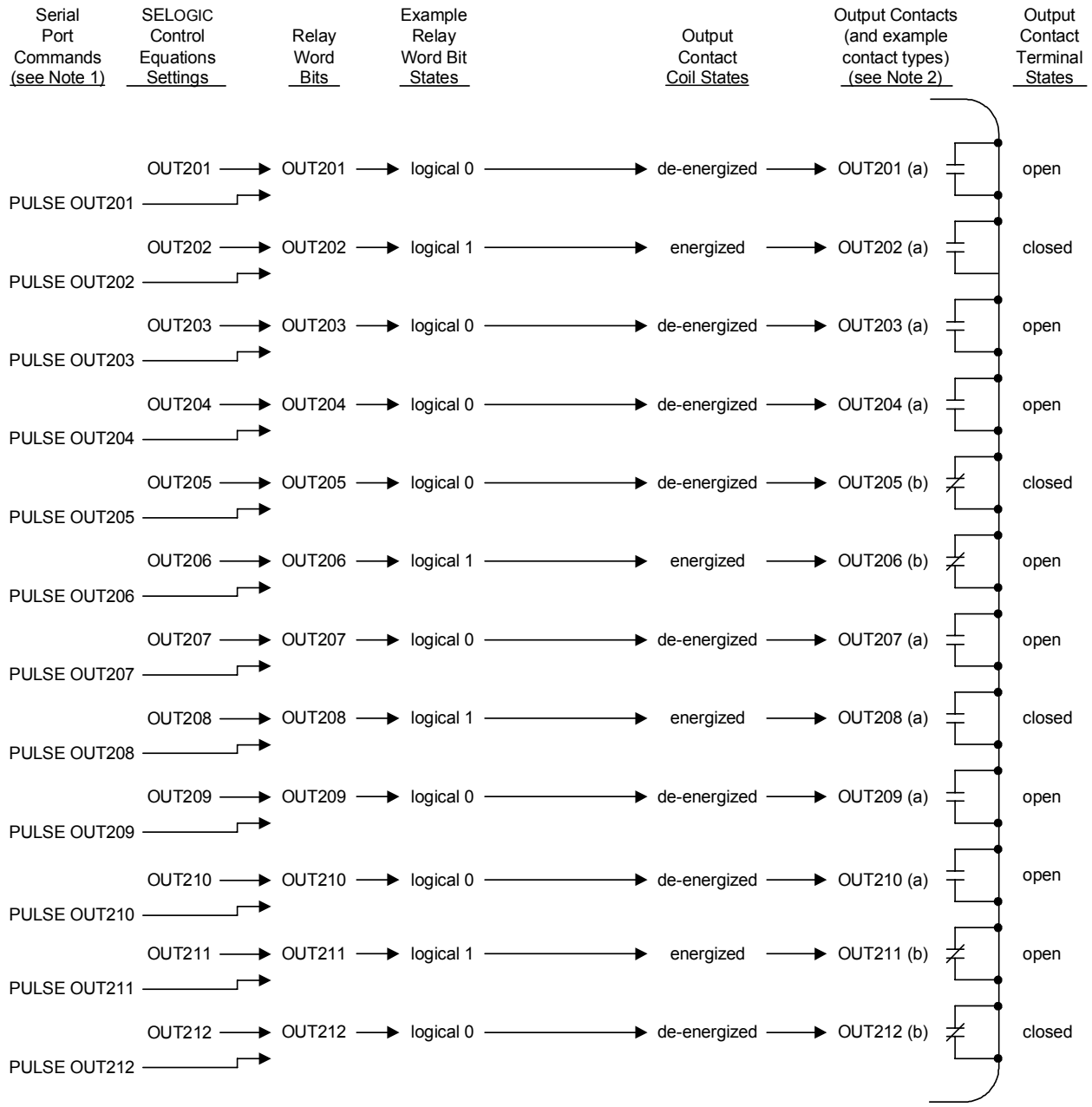

Note 1: PULSE command is also available via the front panel (CNTRL pushbutton, "output contact tesing" option). Execution of the PULSE command results in a logical 1 input into the above logic (1-second default pulse width).

Note 2: See Figure 5.26 and Figure 5.27 in ***Section 5: Installation*** for the location of jumpers to configure output contacts.

DWG: M300G082a

Figure 4.17: Logic Flow for Example Output Contact Operation— Extra I/O Board (Model 0300G_1 and 0300G_Y)

LOCAL CONTROL SWITCHES

The local control switch feature of this relay replaces traditional panel-mounted control switches. Operate the sixteen (16) local control switches using the front-panel keyboard/display (see ***Section 9: Front-Panel Operation***).

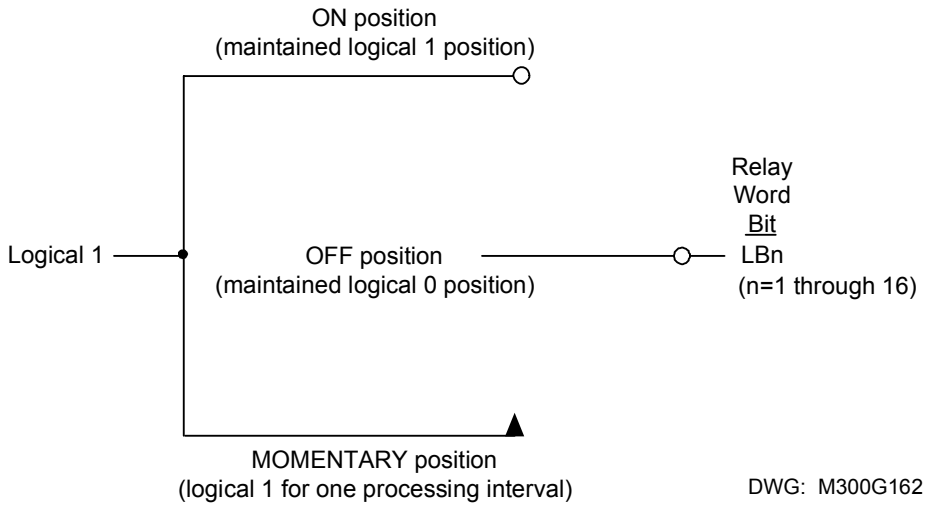

The switch representation in this figure is derived from the standard:

Graphics Symbols for Electrical and Electronics Diagrams
IEEE Std 315-1975, CSA Z99-1975, ANSI Y32.2-1975,
4.11 Combination Locking and Nonlocking Switch, Item 4.11.1

Figure 4.18: Local Control Switches Drive Local Bits LB1 Through LB16

The output of the local control switch in Figure 4.18 is a Relay Word bit LB*n* (*n* = 1 through 16), called a local bit. The local control switch logic in Figure 4.18 repeats for each local bit LB1 through LB16. Use these local bits in SELOGIC control equations. For a given local control switch, the local control switch positions are enabled by making corresponding label settings.

Table 4.3: Correspondence Between Local Control Switch Positions and Label Settings

Switch Position	Label Setting	Setting Definition	Logic State
Not applicable	NLB*n*	Name of Local Control Switch	not applicable
ON	SLB*n*	"Set" Local bit LB*n*	logical 1
OFF	CLB*n*	"Clear" Local bit LB*n*	logical 0
MOMENTARY	PLB*n*	"Pulse" Local bit LB*n*	logical 1 for one processing interval

Note the first setting in Table 4.3 (NLB*n*) is the overall switch name setting. Make each label setting through the serial port using the command **SET G**. View these settings using the serial port command **SHO G** (see ***Section 6: Enter Relay Settings*** and ***Section 10: Serial Port Communications and Commands***).

Local Control Switch Types

Configure any local control switch as one of the following three switch types.

ON/OFF Switch

Local bit LB*n* is in either the ON (LB*n* = logical 1) or OFF (LB*n* = logical 0) position.

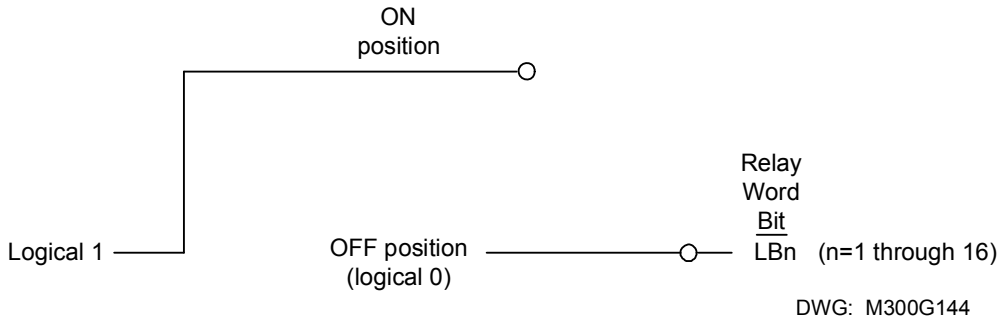

Figure 4.19: Local Control Switch Configured as an ON/OFF Switch

OFF/MOMENTARY Switch

The local bit LB*n* is maintained in the OFF (LB*n* = logical 0) position and pulses to the MOMENTARY (LB*n* = logical 1) position for one processing interval (1/4 cycle).

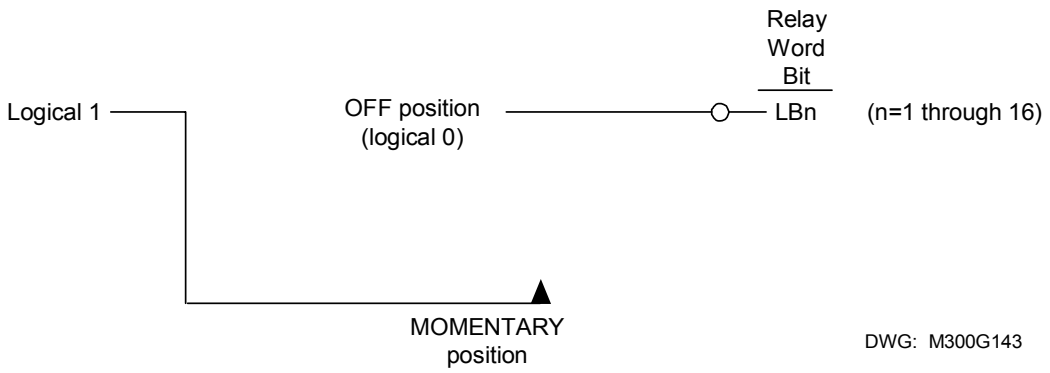

Figure 4.20: Local Control Switch Configured as an OFF/MOMENTARY Switch

ON/OFF/MOMENTARY Switch

The local bit LB*n*:

is in either the ON (LB*n* = logical 1) or OFF (LB*n* = logical 0) position

or

is in the OFF (LB*n* = logical 0) position and pulses to the MOMENTARY (LB*n* = logical 1) position for one processing interval (1/4 cycle).

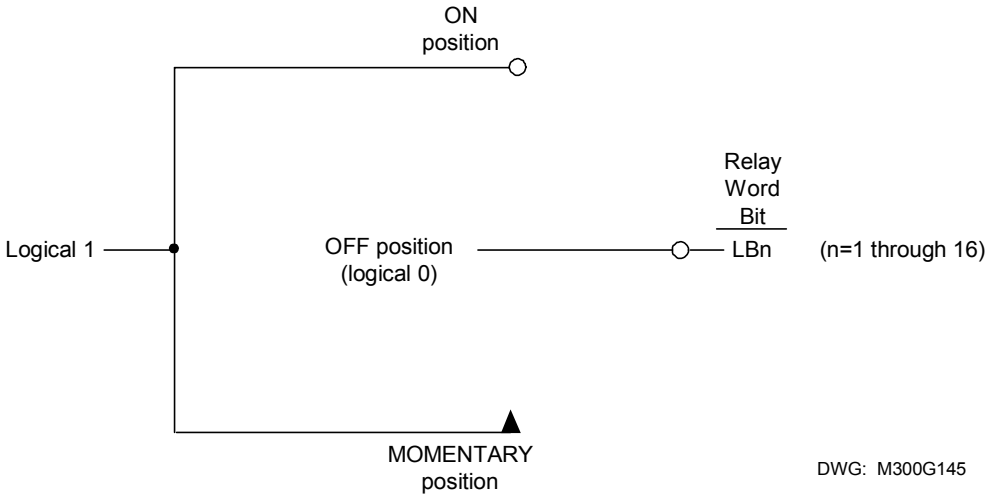

Figure 4.21: Local Control Switch Configured as an ON/OFF/MOMENTARY Switch

Table 4.4: Correspondence Between Local Control Switch Types and Required Label Settings

Local Switch Type	Label NLB*n*	Label CLB*n*	Label SLB*n*	Label PLB*n*
ON/OFF	X	X	X	
OFF/MOMENTARY	X	X		X
ON/OFF/MOMENTARY	X	X	X	X

Disable local control switches by "nulling out" all the label settings for that switch (see ***Section 6: Enter Relay Settings***). The local bit associated with this disabled local control switch then is fixed at logical 0.

Factory Settings Examples

Local bit LB1 is used in a few of the factory SELOGIC control equation settings for manual generator shutdown. Its corresponding local control switch position labels are set to configure the switches as OFF/MOMENTARY switches:

Local Bit	Label Settings	Function
LB1	NLB1 = GEN SHUTDOWN	trips prime mover and initiates generator main circuit breaker and field circuit breaker sequential trips
	CLB1 = RETURN	OFF position ("return" from MOMENTARY position)
	SLB1 =	ON position—not used (left "blank")
	PLB1 = TRIP	MOMENTARY position

The following Figure 4.22 shows local control switches with factory settings.

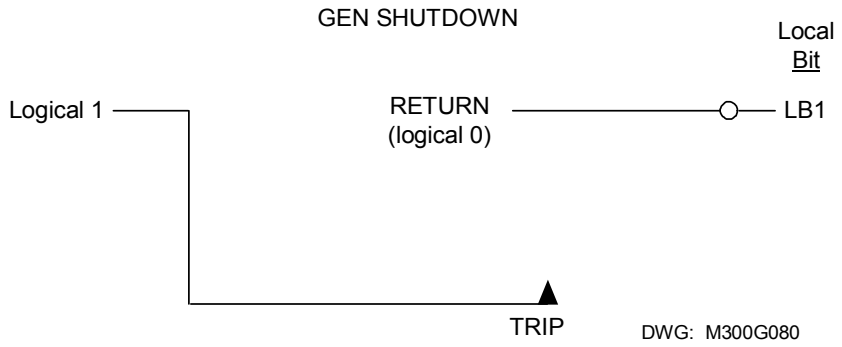

Figure 4.22: Configured GEN SHUTDOWN Switch Drives Local Bit LB1

Local bit LB2 is not included in the factory settings, but could be applied as a local generator breaker close function using the settings shown below.

Local Bit	Label Settings	Function
LB2	NLB2 = GEN BKR CLOSE	initiates generator main circuit breaker close. Sequence completes only if CLEN SELOGIC control equation result is a logical 1 within CLSD seconds of sequence initiation.
	CLB2 = RETURN	OFF position ("return" from MOMENTARY position)
	SLB2 =	ON position—not used (left "blank")
	PLB2 = CLOSE	MOMENTARY position

Local bit LB1 is used along with remote bit RB1 to set latch bit LT1 which then trips the prime mover.

Additional Local Control Switch Application Ideas

The preceding factory settings example uses an OFF/MOMENTARY switch. Local control switches configured as ON/OFF switches can be used for such applications as protection element enable/disable.

Local control switches also can be configured as ON/OFF/MOMENTARY switches for applications that require them. Local control switches can be applied to almost any control scheme that traditionally requires front-panel switches.

Local Control Switch States Retained

Power Loss

The states of the local bits (Relay Word bits LB1 through LB16) are retained if power to the relay is lost and then restored. If a local control switch is in the ON position (corresponding local bit is asserted to logical 1) when power is lost, it comes back in the ON position (corresponding local bit is still asserted to logical 1) when power is restored. If a local control switch is in the OFF position (corresponding local bit is deasserted to logical 0) when power is lost, it comes back in the OFF position (corresponding local bit is still deasserted to logical 0) when power is restored. This feature makes the local bit feature behave the same as a traditional installation with panel-mounted control switches. If power is lost to the panel, the front-panel control switch positions remain unchanged.

Settings Change or Active Setting Group Change

If settings are changed (for the active setting group or the other setting group) or the active setting group is changed, the states of the local bits (Relay Word bits LB1 through LB16) are retained, much like in the preceding ***Power Loss*** explanation.

If a local control switch is made inoperable because of a settings change (i.e., the corresponding label settings are nulled), the corresponding local bit then is fixed at logical 0, regardless of the local bit state before the settings change. If a local control switch is made newly operable because of a settings change (i.e., the corresponding label settings are set), the corresponding local bit starts out at logical 0.

REMOTE CONTROL SWITCHES

Remote control switches are operated via the serial communications port only (see ***CON Command (Control Remote Bit)*** in ***Section 10: Serial Port Communications and Commands***).

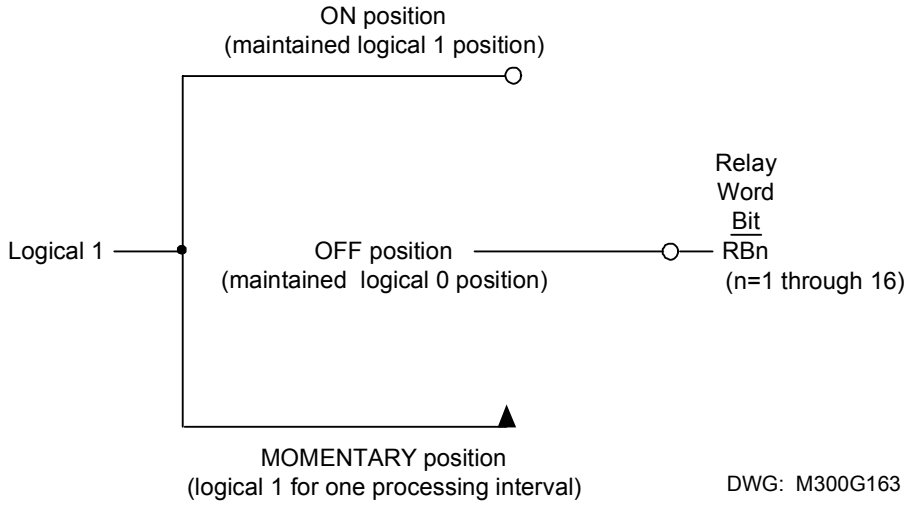

The switch representation in this figure is derived from the standard:

Graphics Symbols for Electrical and Electronics Diagrams
IEEE Std 315-1975, CSA Z99-1975, ANSI Y32.2-1975,
4.11 Combination Locking and Nonlocking Switch, Item 4.11.1

Figure 4.23: Remote Control Switches Drive Remote Bits RB1 Through RB16

The outputs of the remote control switches in Figure 4.23 are Relay Word bits RB*n* (*n* = 1 to 16), called remote bits. Use these remote bits in SELOGIC control equations.

Any given remote control switch can be put in one of the following three positions:

ON	(logical 1)
OFF	(logical 0)
MOMENTARY	(logical 1 for one processing interval)

Remote Bit Application Ideas

With SELOGIC control equations, the remote bits can be used in applications similar to those in which local bits are used (see preceding local control switch discussion).

Also, remote bits can be used much as optoisolated inputs are used in operating latch control switches. Pulse (momentarily operate) the remote bits for this application.

Remote Bit States Not Retained When Power is Lost

The states of the remote bits (Relay Word bits RB1 through RB16) are not retained if power to the relay is lost and then restored. The remote control switches always come back in the OFF position (corresponding remote bit is deasserted to logical 0) when power is restored to the relay.

Remote Bit States Retained When Settings Changed or Active Setting Group Changed

The state of each remote bit (Relay Word bits RB1 through RB16) is retained if relay settings are changed (for the active setting group or the other setting group) or the active setting group is changed. If a remote control switch is in the ON position (corresponding remote bit is asserted to logical 1) before a setting change or an active setting group change, it comes back in the ON position (corresponding remote bit is still asserted to logical 1) after the change. If a remote control switch is in the OFF position (corresponding remote bit is deasserted to logical 0) before a settings change or an active setting group change, it comes back in the OFF position (corresponding remote bit is still deasserted to logical 0) after the change.

FRONT-PANEL DISPLAY CONFIGURATION

The rotating default display on the relay front panel replaces indicating panel meters and lights. Traditional panel meters indicate generator electrical quantities such as:

- phase current
- phase voltage
- generator output power
- generator frequency

Traditional indicating panel lights are turned on and off by circuit breaker auxiliary contacts, front-panel switches, SCADA contacts, etc. They indicate such conditions as:

- circuit breaker open/closed
- protection elements enabled/disabled

Additionally, the relay displays field insulation resistance Rf and RTD temperatures if supported.

Traditional Indicating Panel Meters

Traditional indicating panel meters are wired to ac current and voltage transformers in series or parallel with SEL-300G ac inputs. The panel meters then measure and display desired quantities, such as current magnitude, voltage magnitude, generator frequency, generator output power, etc.

Traditional Indicating Panel Meters Replaced with Rotating Meter Display

The indicating panel meters are not needed if the rotating default display feature in the SEL-300G is applied. The relay already is measuring the desired quantities to a high degree of accuracy. Simply configure the front-panel display settings to enable the automatic display of real-time measured quantities.

To enable real-time display of measured quantities, use the serial port **SET G** command or front-panel SET GLOBAL setting entry functions (see ***Section 6: Enter Relay Settings*** and ***Section 10: Serial Port Communications and Commands***). Enabled real-time measurements are shown along with the text display points on the SEL-300G front-panel display on a 2-second rotation (see ***Rotating Default Display*** in ***Section 9: Front-Panel Operation*** for more specific operation information).

The following factory settings examples enable rotating display of phase currents, phase-to-phase voltages, generator output power, generator frequency, station dc voltage, field insulation resistance, and RTD termperatures.

Front-Panel Current Display (Y, N) FP_I = Y

Setting to Y enables rotating display of measured generator phase and neutral currents, scaled in primary amperes.

Front-Panel Phase-to-Phase Voltage Display (Y, N) FP_VPP = Y

Setting to Y enables rotating display of measured generator phase-to-phase voltages and neutral voltage, scaled in primary kilovolts.

Front-Panel Phase Voltage Display (Y, N) FP_VP = N

Setting to Y enables rotating display of measured generator phase and neutral voltages, scaled in primary kilovolts.

Front-Panel Power Display (Y, N) FP_MW = Y

Setting to Y enables rotating display of measured generator real and reactive three-phase power, scaled in primary megawatts and megavars, and the present generator output power factor.

Front-Panel Frequency Display (Y, N) FP_FR = Y

Setting to Y enables rotating display of measured generator frequency in hertz and measured dc battery voltage in volts.

Front-Panel Current Differential Display (Y, N) FP_87 = N

Setting to Y enables rotating display of measured generator differential input phase currents, scaled in primary amperes (available only when relay is equipped with differential current inputs).

Front-Panel Field Insulation Rf Display (Y, N) FP_RF = N

Setting to Y enables rotating display of measured field insulation resistance Rf in Kohms (available only when the relay is set and connected to SEL-2664 Field Ground Module).

Front-Panel RTD Temperature Display (Y, N) FP_RTD = N

Setting to Y enables rotating display of up to 12 measured RTD temperatures in degrees C or F (depends on the setting). RTD display is only available if the relay is equipped with RTD inputs using the SEL-2600 RTD module.

Additional detailed meter data is also available using the front-panel METER pushbutton or serial port **METER** commands.

Traditional Indicating Panel Lights

Figure 4.24 shows traditional indicating panel lights wired in parallel with SEL-300G optoisolated inputs. Input IN101 provides generator main circuit breaker status to the relay, and input IN102 indicates generator field circuit breaker status.

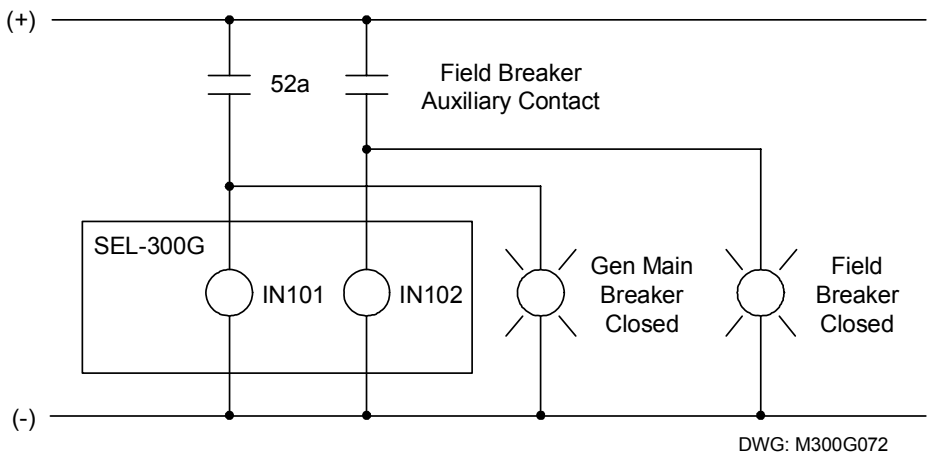

Figure 4.24: Traditional Panel Light Installations

Circuit Breaker Status Indication

In Figure 4.24, the GEN MAIN BREAKER CLOSED panel light illuminates when the generator main circuit breaker 52a auxiliary contact is closed. When the 52a circuit breaker auxiliary contact is open, the GEN MAIN BREAKER CLOSED panel light extinguishes, and it is understood that the breaker is open. Operation is similar for the field breaker auxiliary contact.

Traditional Indicating Panel Lights Replaced with Rotating Text Display

The indicating panel lights are not needed if the rotating text display feature in the SEL-300G is used. Figure 4.25 shows the elimination of the indicating panel lights by using the rotating text display.

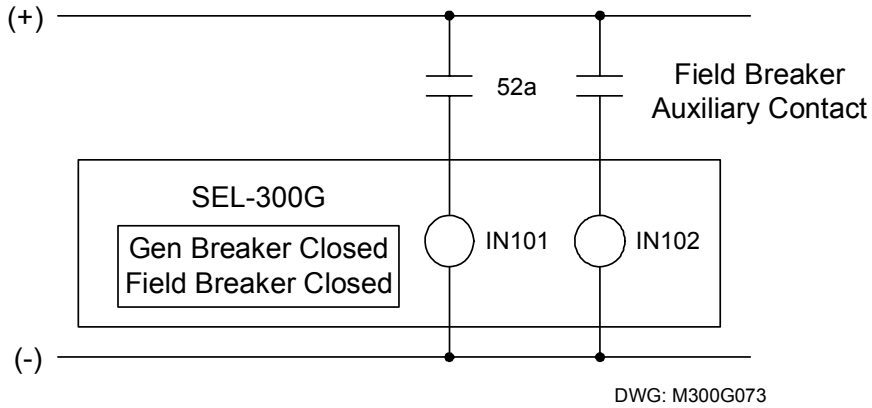

Figure 4.25: Rotating Text Display Replaces Traditional Panel Light Installations

There are sixteen (16) of these text displays available in the SEL-300G. Each text display has two complementary screens (e.g., GEN BKR CLOSED and GEN BKR OPEN) available.

General Operation of Rotating Text Display Settings

SELOGIC control equation display point setting DP*n* (*n* = 1 through 16) controls the display of corresponding, complementary text settings:

DP*n*_1 (displayed when DP*n* = logical 1)
DP*n*_0 (displayed when DP*n* = logical 0)

Make each text setting through the serial port using the command **SET G**. View these text settings using the serial port command **SHO G** (see ***Section 6: Enter Relay Settings*** and ***Section 10: Serial Port Communications and Commands***). These text settings are displayed on the SEL-300G front-panel display on a 2-second rotation (see ***Rotating Default Display*** in ***Section 9: Front-Panel Operation*** for more specific operation information).

The following factory settings examples use optoisolated inputs IN101 and IN102 in the display point settings. Local bits (LB1 through LB16), latch bits (LT1 through LT16), remote bits (RB1 through RB16), setting group indicators (SG1 and SG2), and any other combination of Relay Word bits in a SELOGIC control equation setting also can be used in display point setting DP*n*.

Factory Settings Examples

The factory settings provide the replacement solution shown in Figure 4.25 for the traditional indicating panel lights in Figure 4.24.

Main Circuit Breaker Status Indication

Make SELOGIC control equation display point setting DP1:

DP1 = IN101

Make corresponding, complementary text settings:

DP1_1 = GEN BKR CLOSED
DP1_0 = GEN BKR OPEN

Display point setting DP1 controls the display of the text settings.

Circuit Breaker Closed

In Figure 4.25, optoisolated input IN101 is energized when the 52a circuit breaker auxiliary contact is closed, resulting in:

DP1 = IN101 = logical 1

This results in the display of corresponding text setting DP1_1 on the front-panel display:

```
GEN BKR CLOSED
```

Circuit Breaker Open

In Figure 4.25, optoisolated input IN101 is de-energized when the 52a circuit breaker auxiliary contact is open, resulting in:

DP1 = IN101 = logical 0

This results in the display of corresponding text setting DP1_0 on the front-panel display:

```
GEN BKR OPEN
```

Additional Settings Examples

Display Only One Message

To display just one screen, but not its complement, set only one of the text settings. For example, to display just the "breaker closed" condition but not the "breaker open" condition, make the following settings:

DP1	=	IN101	(52a circuit breaker auxiliary contact connected to input IN101—see Figure 4.25)
DP1_1	=	GEN BKR CLOSED	(displays when DP1 = logical 1)
DP1_0	=	(blank)	

Circuit Breaker Closed

In Figure 4.25, optoisolated input IN101 is energized when the 52a circuit breaker auxiliary contact is closed, resulting in:

DP1 = IN101 = logical 1

This results in the display of corresponding text setting DP1_1 on the front-panel display:

```
GEN BKR CLOSED
```

Circuit Breaker Open

In Figure 4.25, optoisolated input IN101 is de-energized when the 52a circuit breaker auxiliary contact is open, resulting in:

DP1 = IN101 = logical 0

Corresponding text setting DP1_0 is not set (it is "blank"), so no message is displayed on the front-panel display.

Continually Display a Message

To continually display a message in the rotation, set the SELOGIC control equation display point setting directly to 0 (logical 0) or 1 (logical 1) and the corresponding text setting. For example, if an SEL-300G is protecting a generator labeled "Unit 1A," the generator name can be continually displayed with the following settings

DP5	=	1	(set directly to logical 1)
DP5_1	=	UNIT 1A	(displays when DP5 = logical 1)
DP5_0	=		("blank")

This results in the continual display of text setting DP5_1 on the front-panel display:

```
UNIT 1A
```

This also can be realized with the following settings:

DP5	=	0	(set directly to logical 0)
DP5_1	=		("blank")

DP5_0 = UNIT 1A (displays when DP5 = logical 0)

This results in the continual display of text setting DP5_0 on the front-panel display:

UNIT 1A

INADVERTENT ENERGIZATION

Inadvertent energization occurs when the generator main circuit breaker or auxiliary transformer circuit breaker is incorrectly closed to energize the generator while the generator is out of service. When this occurs, the generator can act as an induction motor, drawing as much as four to six times rated stator current from the system. These high stator currents induce high currents in the rotor, quickly damaging the rotor.

The SEL-300G INAD SELOGIC control equation is intended for use as dedicated inadvertent energization protection. Two accepted approaches are voltage supervised overcurrent relays and auxiliary contact supervised overcurrent relays. The INAD SELOGIC control equation supports both.

The objective of inadvertent energization protection is to detect that the generator has been removed from service, but has suddenly been reenergized. We can begin to build the INAD equation:

INAD = [Generator was de-energized] * [Generator is now energized]

If we use an overcurrent element, 50L, to detect that the generator has been reenergized, then the INAD equation can be described:

INAD = [Generator was de-energized] * 50L

It now remains to define the [Generator was de-energized] conditions.

Some indicators that the generator is removed from service include:

Low terminal voltage

Field circuit breaker is open

No phase current

We can require that all these conditions be true to arm Inadvertent Energization tripping by using the SELOGIC control equation AND operator:

Generator is de-energized = !50L * 27V1 * !IN102

where

!50L = 50L sensitive phase overcurrent element is not picked up
27V1 = positive-sequence phase undervoltage element is picked up
!IN102 = field circuit breaker auxiliary contact is open

We need to add time-delay pickup and dropout timers to this logic equation. The time-delay pickup timer adds an arming delay so that the inadvertent energization scheme is not armed until a few seconds after the generator is removed from service. The dropout timer ensures that the scheme will trip when current is applied during an inadvertent energization. A SELOGIC control equation is used to provide the arming delays:

SV2 = !50L * 27V1 * !IN102
SV2PU = 2.0 seconds
SV2DO = 1.0 second

With these settings, the INAD settings become:

INAD = SV2T * 50L	Generator was de-energized and current is now detected
INADPU = 0.25 second	1/4-second time delay on inadvertent energization trip
INADDO = 0.13 second	One-eighth second time delay on INAD trip dropout

The INADT Relay Word bit is added to the SV3 SELOGIC control equation to trip the generator main circuit breaker, the field breaker, the prime mover, and the generator lockout relay when an inadvertent energization occurs. The logic diagram in Figure 4.26 summarizes the logic.

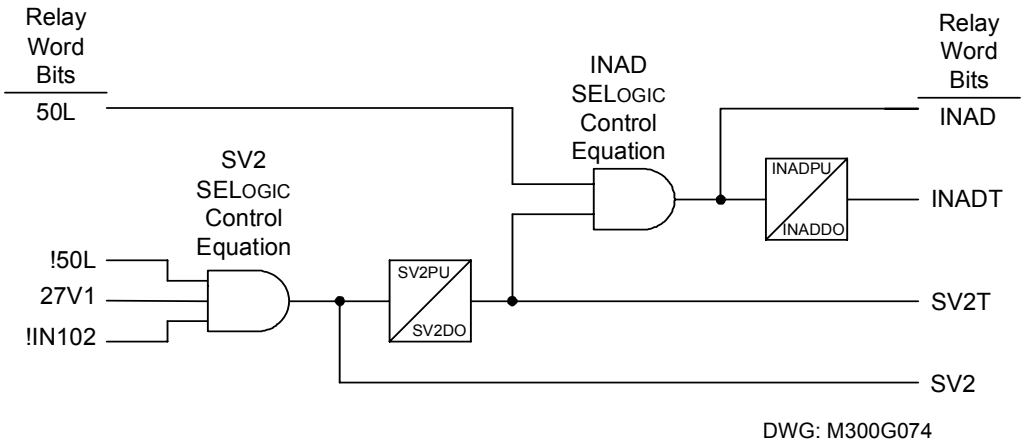

Figure 4.26: Inadvertent Energization Logic Diagram

Below are some setting guidelines for the inadvertent energization logic:

Set 50LP equal to 0.25 A secondary to provide maximum current sensitivity.

IN102 is shown connected to the generator field breaker auxiliary contact in the example settings. If the field breaker auxiliary contact is connected to another input in your application, use the Relay Word bit representing that input in the SV2 SELOGIC control equation. If a field breaker auxiliary contact is not connected to the SEL-300G, remove this term from the SV2 SELOGIC control equation.

The SV2DO timer defines that inadvertent energization protection will remain armed for 1 second after the 27V1 element deasserts due to reapplication of the generator field. If you can parallel the generator within 1 second of reenergizing the field, shorten the SV2DO timer setting.

INADPU must be set less than SV2DO.

Note: Because this protection scheme is disabled when generator terminal voltage returns to near normal, it does not provide protection for generator energizations due to breaker flashover prior to synchronizing. Use the protection scheme described at the end of this section or separate protection to detect breaker flashovers.

BREAKER FAILURE PROTECTION

In SEL-300G1 Relay applications where the 87-input phase current transformers are connected on the high side of a single unit breaker, the SEL-300G1 Relay can provide breaker failure protection (see Figure 4.27).

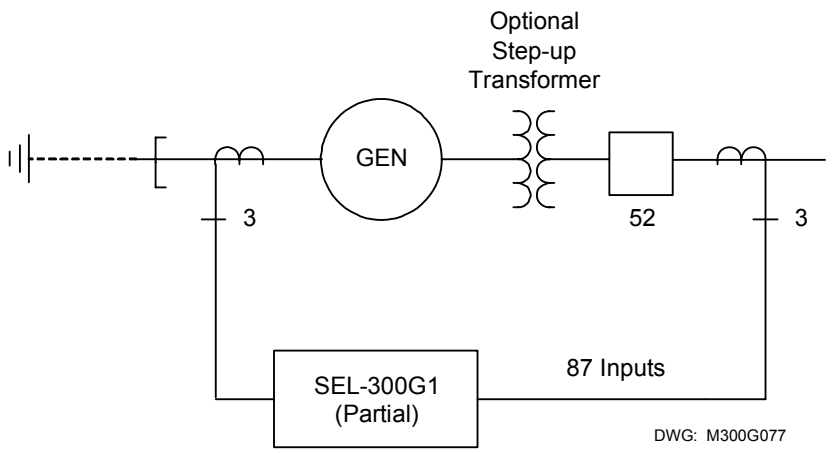

Figure 4.27: Generator/Breaker Topology Where SEL-300G1 Relay Offers Breaker Failure Protection

In this topology, the SEL-300G is able to directly measure current flowing in the generator breaker. The SV7 SELOGIC control equation below creates a breaker failure function based on circuit breaker current and the breaker auxiliary contact, 52A, state. The SELOGIC control equation logic is shown in Figure 4.28.

SV7 = (SV7 + IN103 + TRIP1) * (50H1 + 50R1 + 52A)

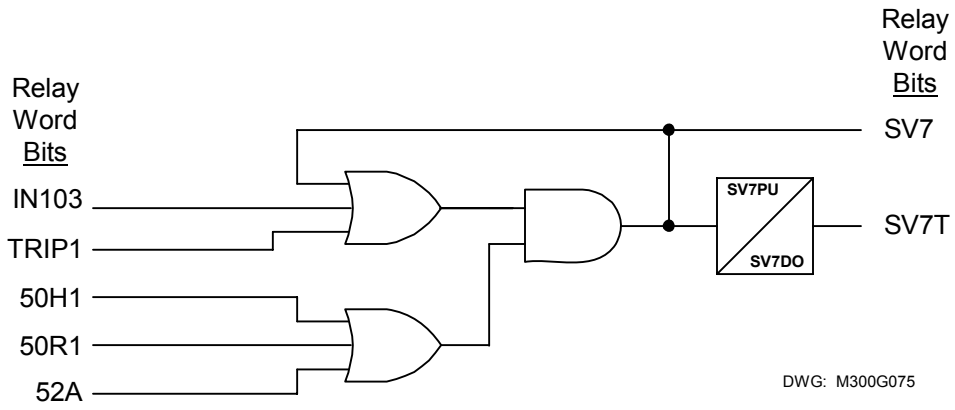

Figure 4.28: SEL-300G Relay Breaker Failure Logic

Breaker failure time is defined by the SV7PU time-delay pickup timer setting. This timer starts when the SEL-300G TRIP1 Relay Word bit asserts, or when external protection asserts the IN103 input if the breaker is closed (52A = logical 1), or if the 87-input phase or residual overcurrent element is picked up (50H1 or 50R1 = logical 1). By including the SV7 Relay Word bit in the SV7 SELOGIC control equation, the breaker failure initiate condition is latched in. The SV7PU timer continues to run until the breaker opens (52A = logical 0) and the measured current drops

below the pickup setting of both overcurrent elements. Assign the SV7T Relay Word bit to close an output contact which then can be connected to perform breaker failure lockout tripping.

In multibreaker applications or in applications where only the generator current is measured, separate breaker failure protection should be provided for each breaker.

BREAKER FAILURE PROTECTION WITH BREAKER FLASHOVER DETECTION

Prior to synchronizing, if the generator terminal voltage is out of phase with the system voltage, up to two per unit voltage can appear across the open breaker. If a breaker pole insulation fails at this point, tripping the breaker will not de-energize the generator. It is useful in this case to initiate breaker failure timing.

The SEL-300G1 Relay can provide breaker flashover detection as an addition to the breaker failure protection, if the relay neutral current input is not being applied for generator neutral overcurrent protection. In this case, the neutral current input is connected to the generator step-up transformer high-side neutral CT as shown in Figure 4.29.

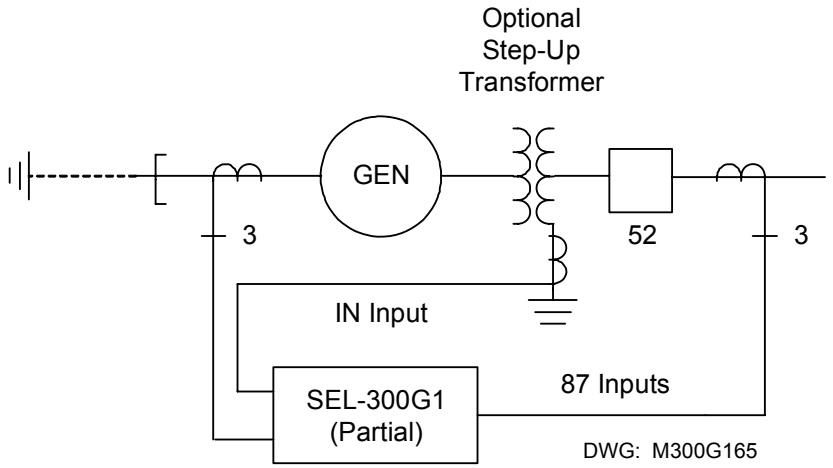

Figure 4.29: Generator/Breaker Topology Where SEL-300G1 Relay Offers Breaker Failure and Breaker Flashover Protection

In this topology, the SEL-300G is able to measure directly current flowing in the generator breaker and step-up transformer neutral circuit. The SV7 SELOGIC control equation below creates a breaker failure plus breaker pole flashover function based on circuit breaker current, transformer neutral current, and the breaker auxiliary contact, 52A, state. The SELOGIC control equation logic is shown in Figure 4.30.

SV6 = 50N1*!52A

SV6PU = 0.10 s

SV6DO = 0.00 s

SV7 = (SV7 + IN103 + TRIP1 + SV6T) * (50H1 + 50R1 + 52A)

A breaker pole flashover is detected by the SV6 SELOGIC control equation variable. If a single breaker pole flashes over, the 50N1 element picks up and the 52A input remains deasserted. If after 0.10 second the 52A input does not indicate that the breaker has closed, the SV6T Relay Word bit asserts and initiates breaker failure timing.

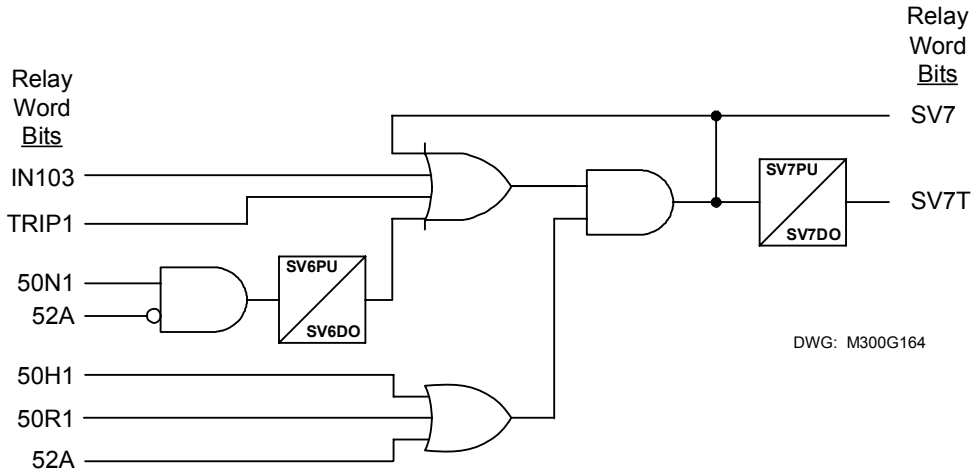

Figure 4.30: SEL-300G Relay Breaker Failure Plus Breaker Flashover Protection Logic

Breaker failure time is defined by the SV7PU time-delay pickup timer setting. If phase or residual current is detected, or if the 52A contact indicates the breaker is closed, the SV7PU timer starts when:

the SEL-300G TRIP1 Relay Word bit asserts

when external protection asserts the IN103 input

if transformer neutral current is detected (50N1) while the breaker is open (!52A), indicating a breaker pole flashover

By including the SV7 Relay Word bit in the SV7 SELOGIC control equation, the breaker failure initiate condition is latched in. The SV7PU timer continues to run until the breaker opens (52A = logical 0) and the measured current drops below the pickup setting of both overcurrent elements. Assign the SV7T Relay Word bit to close an output contact which can then be connected to perform breaker failure lockout tripping.

In multibreaker applications or in applications where only the generator current is measured, separate breaker failure and breaker flashover protection should be provided for each breaker.

APPLICATION EXAMPLES

Performance Alarms

Several protection elements can provide abnormal operation alarms prior to tripping the generator. In some cases, the early alarm may give an operator the opportunity to correct the problem before the relay trips the generator. In addition, the SEL-300G provides several monitoring functions that can provide alarms related to loss of relaying potential, relay performance, dc battery voltage, and breaker wear. This section describes application of those alarms.

Protection Element Alarms

Volts/Hertz Overexcitation Alarms, 24D1T and 24C2

The relay provides two options for overexcitation alarms based on volts/hertz measurement. You can use the Level 1 definite-time element, 24D1T, to provide a sensitive, time-delayed indication of excessive volts/hertz. Some protection schemes call for a definite-time limit on volts/hertz overexcitation. In this instance, you may wish to use the 24D1T element for tripping. In this case, the instantaneous pickup elements, 24D1 and 24C2, can be used to indicate that the SEL-300G has detected volts/hertz overexcitation and is timing toward a trip. To obtain this indication, include the desired Relay Word bit in the SELOGIC control equation for the indicating output contact. In our factory example, OUT107 is used:

OUT107 = … + 24D1 + 24C2 +…

Unbalance Current Alarm, 46Q1T and 46Q2

As with volts/hertz protection, the relay provides a definite-time and an inverse-time level of negative-sequence overcurrent protection. You may use either the definite-time element, 46Q1T, or the instantaneous pickup of the inverse-time element, 46Q2, to generate an alarm:

OUT107 = … + 46Q1T +…

Loss-of-Potential, 60LOP

Because accurate relaying potentials are required by many of the protection elements, the 60LOP function is used to supervise these functions. The volts/hertz element, loss-of-field element, directional power element, voltage-restrained and voltage-controlled phase overcurrent elements, and Zone 2 stator ground fault element all require accurate relaying potentials for correct operation. It is critical that a loss-of-potential is indicated so the problem may be corrected and protection returned to service.

The factory setting example uses OUT106 to indicate loss-of-potential:

OUT106 = 60LOP

Generator Off-Frequency Accumulator Protection

The Off-Frequency Operating Time Accumulator protection function, described in ***Section 2: Relay Element Settings***, can be used to either trip or alarm when the generator exceeds the operating time limits entered as relay settings. To use the output of this function as an annunciator, add the BNDT Relay Word bit to the protection alarm annunciator contact. The factory setting example uses OUT107:

OUT107 = …+ BNDT + …

Circuit Breaker Wear Monitor

The SEL-300G circuit breaker wear monitor function described in ***Section 3: Auxiliary Function Settings*** provides an indication, BCW, when the combination of close-to-open operations and interrupted current exceeds the breaker manufacturer's wear recommendation, as entered into the relay via the settings. To provide an annunciator indication that the circuit breaker wear rating has been exceeded, add the BCW Relay Word bit to the protection alarm annunciator contact SELOGIC control equation:

OUT107 = … + BCW + …

DC Voltage Monitor

Section 3: Auxiliary Function Settings offers several examples of methods to indicate that the dc voltage applied to the relay is outside normal bounds. To cause OUT107 to close while the dc voltage is out of tolerance, but still high enough that the relay is operable, add the following statement to the OUT107 SELOGIC control equation:

OUT107 = …+ !(DCLO * DCHI) + …

With the setting DCHIP set below normal dc voltage and DCLOP set above normal dc voltage, OUT107 will close if the dc voltage rises above DCLOP or falls below DCHIP. If dc voltage fails altogether, the relay ALARM contact will close.

Relay Self-Test Alarms

The relay runs a variety of self-tests. As shown below, many relay problems detected by self-test cause a closure of the ALARM output contact. Monitoring this contact is the single most important relay maintenance activity that you can perform.

The relay takes the following corrective actions for out-of-tolerance conditions (see Table 4.5):

Protection Disabled: The relay disables all protection functions and trip/close logic. All output contacts are de-energized. The EN front-panel LED is extinguished.

ALARM Output: The ALARM output contact signals an alarm condition by going to its de-energized state. If the ALARM output contact is a "b" contact (normally closed), it closes for an alarm condition or if the relay is de-energized. If the ALARM output contact is an "a" contact (normally open), it opens for an alarm condition or if the relay is de-energized. Alarm condition signaling can be a single 5-second pulse (Pulsed) or permanent (Latched).

The relay generates automatic STATUS reports at the serial port for warnings and failures.

The relay displays messages on the LCD display for failures.

Use the serial port **STATUS** command or front-panel STATUS pushbutton to view relay self-test status.

Table 4.5: Relay Self-Tests

Self-Test	Condition	Limits	Protection Disabled	ALARM Output	Description
IA, IB, IC, IN, VA, VB, VC, VN, VS (optional) Offset	Warning	30 mV	No	Pulsed	Measures the dc offset at each of the input channels every 10 seconds.
Master Offset	Warning	20 mV	No	Pulsed	Measures the dc offset at the A/D every 10 seconds.
	Failure	30 mV	Yes	Latched	
+5 V PS	Warning	+4.80 V +5.20 V	No	Pulsed	Measures the +5 V power supply every 10 seconds.
	Failure	+4.65 V +5.40 V	Yes	Latched	
±5 V REG	Warning	±4.75 V +5.20, –5.25 V	No	Pulsed	Measures the regulated 5 V power supply every 10 seconds.
	Failure	±4.50 V +5.40, –5.50 V	Yes	Latched	
±12 V PS	Warning	±11.50 V ±12.50 V	No	Pulsed	Measures the 12 V power supply every 10 seconds.
	Failure	±11.20 V ±14.00 V	Yes	Latched	
±15 V PS	Warning	±14.40 V ±15.60 V	No	Pulsed	Measures the 15 V power supply every 10 seconds.
	Failure	±14.00 V ±16.00 V	Yes	Latched	
TEMP	Warning	–40° C +85° C	No		Measures the temperature at the A/D voltage reference every 10 seconds.
	Failure	–50° C +100° C	Yes	Latched	
RAM	Failure		Yes	Latched	Performs a read/write test on system RAM every 60 seconds.

Self-Test	Condition	Limits	Protection Disabled	ALARM Output	Description
ROM	Failure	checksum	Yes	Latched	Performs a checksum test on the relay program memory every 10 seconds.
A/D	Failure		Yes	Latched	Validates proper number of conversions each 1/4 cycle.
CR_RAM	Failure	checksum	Yes	Latched	Performs a checksum test on the active copy of the relay settings every 10 seconds.
EEPROM	Failure	checksum	Yes	Latched	Performs a checksum test on the nonvolatile copy of the relay settings every 10 seconds.
The following self-tests are performed by dedicated circuitry in the microprocessor and the SEL-300G main board. Failures in these tests shut down the microprocessor and are not shown in the STATUS report.					
Micro-processor Crystal	Failure		Yes	Latched	The relay monitors the microprocessor crystal. If the crystal fails, the relay displays “CLOCK STOPPED” on the LCD display. The test runs continuously.
Micro-processor	Failure		Yes	Latched	The microprocessor examines each program instruction, memory access, and interrupt. The relay displays “VECTOR nn” on the LCD upon detection of an invalid instruction, memory access, or spurious interrupt. The test runs continuously.

RELAY WORD BITS (USED IN SELOGIC CONTROL EQUATIONS)

Relay Word bits are used in SELOGIC control equation settings. SELOGIC control equation settings also can be **set directly** to 1 (logical 1) or 0 (logical 0).

The Relay Word bit row numbers correspond to the row numbers used in the **TAR** command [see ***TAR Command (Target)*** in ***Section 10: Serial Port Communications and Commands***]. Rows 0 and 1 are reserved for the display of the two front-panel target LED rows.

Table 4.6: SEL-300G Relay Word Bits

Row	Relay Word Bits							
2	24TC	24D1	24D1T	24C2	24C2T	24CR	SS1	SS2
3	27P1	27P2	27PP1	27V1	59P1	59P2	59G1	59G2
4	32PTC	32P1	32P1T	32P2	32P2T	59V1	59Q	59PP1
5	40ZTC	40Z1	40Z1T	40Z2	40Z2T	SWING	SG1	SG2
6	46QTC	46Q1	46Q1T	46Q2	46Q2T	46Q2R	INAD	INADT
7	78R1	78R2	78Z1	OOSTC	51CTC	51C	51CT	51CR
8	51GTC	51G	51GT	51GR	51NTC	51N	51NT	51NR
9	51VTC	51V	51VT	51VR	PDEM	QDEM	GDEM	NDEM
10	50P1	50P1T	50P2	50P2T	50G1	50G1T	50G2	50G2T
11	50N1	50N1T	50N2	50N2T	CC	CL	CLOSE	ULCL
12	64GTC	64G1	64G1T	64G2	64G2T	OOS	60LOP	CLEN
13	BKMON	BCW	BCWA	BCWB	BCWC	FAULT	DCLO	DCHI
14	81D1	81D2	81D3	81D4	81D5	81D6	3PO	52A
15	81D1T	81D2T	81D3T	81D4T	81D5T	81D6T	27B81	50L
16	ONLINE	BND1A	BND1T	BND2A	BND2T	BND3A	BND3T	BNDA
17	TRGTR	BND4A	BND4T	BND5A	BND5T	BND6A	BND6T	BNDT
18	TRIP	TRIP1	TRIP2	TRIP3	TRIP4	OC1	OC2	OC3
19	TR1	TR2	TR3	TR4	ULTR1	ULTR2	ULTR3	ULTR4
20	LB1	LB2	LB3	LB4	LB5	LB6	LB7	LB8
21	LB9	LB10	LB11	LB12	LB13	LB14	LB15	LB16
22	RB1	RB2	RB3	RB4	RB5	RB6	RB7	RB8
23	RB9	RB10	RB11	RB12	RB13	RB14	RB15	RB16
24	21CTC[a]	21C1P[a]	21C1T[a]	21C2P[a]	21C2T[a]	ZLOAD[a]	T64G	N64G
25	SV1	SV2	SV3	SV4	SV1T	SV2T	SV3T	SV4T
26	SV5	SV6	SV7	SV8	SV5T	SV6T	SV7T	SV8T
27	SV9	SV10	SV11	SV12	SV9T	SV10T	SV11T	SV12T
28	SV13	SV14	SV15	SV16	SV13T	SV14T	SV15T	SV16T
29	DP8	DP7	DP6	DP5	DP4	DP3	DP2	DP1
30	DP16	DP15	DP14	DP13	DP12	DP11	DP10	DP9
31	ER	OOST	IN106	IN105	IN104	IN103	IN102	IN101
32	ALARM	OUT107	OUT106	OUT105	OUT104	OUT103	OUT102	OUT101
33	87B[b]	87BL1[b]	87BL2[b]	87BL3[b]	87R[b]	87R1[b]	87R2[b]	87R3[b]
34	87U[b]	87U1[b]	87U2[b]	87U3[b]	50H1[b]	50H1T[b]	50H2[b]	50H2T[b]
35	50Q1[b]	50Q1T[b]	50Q2[b]	50Q2T[b]	50R1[b]	50R1T[b]	50R2[b]	50R2T[b]
36	59VP[c]	59VS[c]	CFA[c]	BKRCF[c]	BSYNCH[c]	25C[c]	25A1[c]	25A2[c]

Row	Relay Word Bits							
37	59PP2	27PP2	SF[c]	VDIF[c]	GENVHI[c]	GENVLO[c]	GENFHI[c]	GENFLO[c]
38	87NTC[d]	87N1P[d]	87N1T[d]	87N2P[d]	87N2T[d]	MPP1P[a]	MABC1P[a]	27VS[a]
39	21PTC	21P1P	21P1T	21P2P	21P2T	MPP2P[a]	MABC2P[a]	*
40	IN208[e]	IN207[e]	IN206[e]	IN205[e]	IN204[e]	IN203[e]	IN202[e]	IN201[e]
41	64FTC[f]	64F1[f]	64F1T[f]	64F2[f]	64F2T[f]	64FFLT[f]	*	*
42	OUT201[e]	OUT202[e]	OUT203[e]	OUT204[e]	OUT205[e]	OUT206[e]	OUT207[e]	OUT208[e]
43	OUT209[e]	OUT210[e]	OUT211[e]	OUT212[e]	*	*	*	*
44	50H2A[b]	50H2B[b]	50H2C[b]	*	*	*	*	*
45	*	*	*	*	*	*	*	*
46	SET1	SET2	SET3	SET4	SET5	SET6	SET7	SET8
47	SET9	SET10	SET11	SET12	SET13	SET14	SET15	SET16
48	RST1	RST2	RST3	RST4	RST5	RST6	RST7	RST8
49	RST9	RST10	RST11	RST12	RST13	RST14	RST15	RST16
50	LT1	LT2	LT3	LT4	LT5	LT6	LT7	LT8
51	LT9	LT10	LT11	LT12	LT13	LT14	LT15	LT16
52	OTHTRIP[g]	OTHALRM[g]	AMBTRIP[g]	AMBALRM[g]	BRGTRIP[g]	BRGALRM[g]	WDGTRIP[g]	WDGALRM[g]
53	RTDFLT[g]	*	*	*	*	*	*	2600IN[g]
54	RTD4TR[g]	RTD4AL[g]	RTD3TR[g]	RTD3AL[g]	RTD2TR[g]	RTD2AL[g]	RTD1TR[g]	RTD1AL[g]
55	RTD8TR[g]	RTD8AL[g]	RTD7TR[g]	RTD7AL[g]	RTD6TR[g]	RTD6AL[g]	RTD5TR[g]	RTD5AL[g]
56	RTD12TR[g]	RTD12AL[g]	RTD11TR[g]	RTD11AL[g]	RTD10TR[g]	RTD10AL[g]	RTD9TR[g]	RTD9AL[g]

[*] Not used
[a] This Relay Word bit is replaced with "*" in SEL-300G models without compensator distance element.
[b] This Relay Word bit is replaced with "*" in SEL-300G models 0300G0 and 0300G2 (no differential).
[c] This Relay Word bit is replaced with "*" in SEL-300G models 0300G0 and 0300G1 (no synch check).
[d] This Relay Word bit is replaced with "*" in SEL-300G models 0300G1 and 0300G3 (no ground differential).
[e] This Relay Word bit is replaced with "*" in SEL-300G models 0300G_0 and 0300G_W (no additional I/O). See Figure 5.26 and Figure 5.27 for the location of jumpers to configure output contacts.
[f] This Relay Word bit is replaced with "*" in SEL-300G models without SEL-2664 compatibility (firmware version R322 or earlier).
[g] This Relay Word bit is replaced with "*" in SEL-300G models without SEL-2600 series compatibility.

Table 4.7: Relay Word Bit Definitions for Table 4.6

Row	Bit	Definition	Primary Application
2	24TC	Volts/Hertz Element Torque Control (see Figure 2.16)	Indication
	24D1	Level 1 volts/hertz instantaneous element pickup (volts/hertz above pickup setting 24D1P; see Figure 2.16)	Testing, Indication
	24D1T	Level 1 volts/hertz definite-time element 24D1T timed out (derived from 24D1; see Figure 2.16)	Tripping, Control
	24C2	Level 2 volts/hertz composite element pickup (volts/hertz above pickup setting 24IP, 24D2P1, or 24D2P2; see Figure 2.16)	Indication
	24C2T	Level 2 volts/hertz composite element 24C2T timed out (derived from 24C2; see Figure 2.16)	Tripping, Control
	24CR	Level 2 volts/hertz composite element fully reset (see Figure 2.16)	Testing
	SS1	Setting Group 1 Selection SELOGIC control equation (see Table 3.2)	Indication
	SS2	Setting Group 2 Selection SELOGIC control equation (see Table 3.2)	
3	27P1	Level 1 phase instantaneous undervoltage element (any phase-to-neutral voltage below pickup setting 27P1P; see Figure 2.43)	Tripping, Control
	27P2	Level 2 phase instantaneous undervoltage element (any phase-to-neutral voltage below pickup setting 27P2P; see Figure 2.43)	
	27PP1	Level 1 phase-to-phase instantaneous undervoltage element (any phase-to-phase voltage below pickup setting 27PP1; see Figure 2.43)	
	27V1	Positive-sequence undervoltage element (positive-sequence voltage (V1) below pickup setting 27V1P; see Figure 2.43)	
	59P1	Level 1 phase instantaneous overvoltage element (any phase-to-neutral voltage above pickup setting 59P1P; see Figure 2.44)	
	59P2	Level 2 phase instantaneous overvoltage element (any phase-to-neutral voltage above pickup setting 59P2P; see Figure 2.44)	
	59G1	Level 1 residual instantaneous overvoltage element [residual voltage (3V0) above pickup setting 59G1P; see Figure 2.44]	
	59G2	Level 2 residual instantaneous overvoltage element [residual voltage (3V0) above pickup setting 59G2P; see Figure 2.44]	

Row	Bit	Definition	Primary Application
4	32PTC	Reverse/low-forward power element torque control (see Figure 2.18)	Indication
	32P1	Level 1 reverse/low-forward power instantaneous element (measured three-phase real power less than pickup setting 32P1P; see Figure 2.18)	Testing, Indication
	32P1T	Level 1 reverse/low-forward power element time out (derived from 32P1; see Figure 2.18)	Tripping, Control
	32P2	Level 2 reverse/low-forward power instantaneous element (measured three-phase real power less than pickup setting 32P2P; see Figure 2.18)	Indication
	32P2T	Level 2 reverse/low-forward power element time out (derived from 32P2; see Figure 2.18)	Tripping, Control
	59V1	Positive-sequence overvoltage element (positive-sequence voltage (V1) above pickup setting 59V1P; see Figure 2.44)	
	59Q	Negative-sequence instantaneous overvoltage element (negative-sequence voltage (V2) above pickup setting 59QP; see Figure 2.44)	
	59PP1	Level 1 phase-to-phase instantaneous overvoltage element (any phase-to-phase voltage above pickup setting 59PP1; see Figure 2.44)	
5	40ZTC	Loss-of-field element torque control (see Figure 2.19)	Indication
	40Z1	Zone 1 instantaneous loss-of-field mho element (see Figure 2.19)	Testing, Indication
	40Z1T	Zone 1 time-delayed loss-of-field mho element (see Figure 2.19)	Tripping, Control
	40Z2	Zone 2 instantaneous loss-of-field mho element (see Figure 2.19)	Indication
	40Z2T	Zone 2 time-delayed loss-of-field mho element (see Figure 2.19)	Tripping, Control
	SWING	Single blinder: 78R1/78R2 and 78Z1 assert Double blinder: 78R1 and 78R2 assert or only 78R1 asserts (see Figures 2.48 and 2.51)	Indication
	SG1	Setting Group 1 active (see Table 3.1)	Indication
	SG2	Setting Group 2 active (see Table 3.1)	

Row	Bit	Definition	Primary Application
6	46QTC	Negative-sequence overcurrent element torque control (see Figure 2.22)	Indication
	46Q1	Negative-sequence instantaneous overcurrent element pickup (negative-sequence current above pickup setting 46Q1P; see Figure 2.22)	Testing, Indication
	46Q1T	Negative-sequence definite-time overcurrent element timed out (derived from 46Q1; see Figure 2.22)	Indication, Tripping
	46Q2	Negative-sequence overcurrent element pickup (negative-sequence current above pickup setting 46Q2P; see Figure 2.22)	Testing
	46Q2T	Negative-sequence time-overcurrent element timed out (derived from 46Q2; see Figure 2.22)	Tripping, Control
	46Q2R	Negative sequence time-overcurrent element 46Q2T fully reset (see Figure 2.22)	Testing
	INAD	Inadvertent Energization SELOGIC control equation (see Figure 4.26)	Indication
	INADT	Inadvertent Energization SELOGIC control equation timed out (see Figure 4.26)	Tripping
7	78R1	Out-of-step right blinder or outer resistance blinder (see Figures 2.47 and 2.50)	Indication
	78R2	Out-of-step left blinder or inner resistance blinder (see Figures 2.47 and 2.50)	
	78Z1	Out-of-step mho element (see Figures 2.47 and 2.50)	
	OOSTC	Out-of-step torque-control (see Figures 2.48 and 2.51)	
	51CTC	Voltage controlled phase time-overcurrent torque control (see Figure 2.40)	Indication
	51C	Voltage controlled phase time-overcurrent element pickup (maximum phase current above pickup setting 51CP; see Figure 2.40)	Testing
	51CT	Voltage controlled phase time-overcurrent element 51CT timed out (derived from 51C; see Figure 2.40)	Tripping, Control
	51CR	Voltage controlled phase time-overcurrent element 51CT fully reset (see Figure 2.40)	Testing

Row	Bit	Definition	Primary Application
8	51GTC	Residual time-overcurrent torque control (see Figure 2.29)	Indication
	51G	Residual time-overcurrent element pickup [residual (3IO) current above pickup setting 51GP; see Figure 2.29]	Testing
	51GT	Residual time-overcurrent element 51GT timed out (derived from 51G; see Figure 2.29)	Tripping, Control
	51GR	Residual time-overcurrent element 51GT fully reset (see Figure 2.29)	Testing
	51NTC	Neutral time-overcurrent torque control (see Figure 2.28)	Indication
	51N	Neutral time-overcurrent element pickup [neutral current (IN) above pickup setting 51NP; see Figure 2.28]	Testing
	51NT	Neutral time-overcurrent element 51NT timed out (derived from 51N; see Figure 2.28)	Tripping, Control
	51NR	Neutral time-overcurrent element 51NT fully reset (see Figure 2.28)	Testing
9	51VTC	Voltage restrained phase time-overcurrent torque control (see Figure 2.41)	Indication
	51V	Voltage restrained phase time-overcurrent element pickup (maximum phase current above voltage adjusted pickup setting 51VP; see Figure 2.41)	Testing
	51VT	Voltage restrained phase time-overcurrent element 51VT timed out (derived from 51V; see Figure 2.41)	Tripping, Control
	51VR	Voltage restrained phase time-overcurrent element 51VT fully reset (see Figure 2.41)	Testing
	PDEM	Phase demand current above pickup setting PDEMP (see Figure 3.3)	Indication
	QDEM	Negative-sequence demand current above pickup setting QDEMP (see Figure 3.3)	
	GDEM	Residual demand current above pickup setting GDEMP (see Figure 3.3)	
	NDEM	Neutral demand current above pickup setting NDEMP (see Figure 3.3)	

Row	Bit	Definition	Primary Application
10	50P1	Level 1 phase instantaneous overcurrent element pickup (maximum phase current above 50P1P setting; see Figure 2.26)	Control, Indication
	50P1T	Level 1 phase definite-time overcurrent element timed out (derived from 50P1; see Figure 2.26)	Tripping, Control, Indication
	50P2	Level 2 phase instantaneous overcurrent element pickup (maximum phase current above 50P2P setting; see Figure 2.26)	Control, Indication
	50P2T	Level 2 phase definite-time overcurrent element timed out (derived from 50P2; see Figure 2.26)	Tripping, Control, Indication
	50G1	Level 1 residual instantaneous overcurrent element pickup (residual current above 50G1P setting; see Figure 2.26)	Control, Indication
	50G1T	Level 1 residual definite-time overcurrent element timed out (derived from 50G1; see Figure 2.26)	Tripping, Control, Indication
	50G2	Level 2 residual instantaneous overcurrent element pickup (residual current above 50G2P setting; see Figure 2.26)	Control, Indication
	50G2T	Level 2 residual definite-time overcurrent element timed out (derived from 50G2; see Figure 2.26)	Tripping, Control, Indication
11	50N1	Level 1 neutral instantaneous overcurrent element pickup (neutral current above 50N1P setting; see Figure 2.26)	Control, Indication
	50N1T	Level 1 neutral definite-time overcurrent element timed out (derived from 50N1; see Figure 2.26)	Tripping, Control, Indication
	50N2	Level 2 neutral instantaneous overcurrent element pickup (neutral current above 50N2P setting; see Figure 2.26)	Control, Indication
	50N2T	Level 2 neutral definite-time overcurrent element timed out (derived from 50N2; see Figure 2.26)	Tripping, Control, Indication
	CC**	Asserts 1/4 cycle for Close Command execution (see Figure 4.8)	Testing
	CL	Close Initiating SELOGIC control equation (see Figure 4.8)	
	CLOSE	Close logic output asserted (see Figure 4.8)	Output contact assignment
	ULCL	Unlatch close SELOGIC control equation (see Figure 4.8)	Testing

Row	Bit	Definition	Primary Application
12	64GTC	100 percent stator ground element torque control (see Figure 2.46)	Indication
	64G1	Zone 1 neutral overvoltage stator ground fault element (neutral voltage above pickup setting 64G1P; see Figure 2.46)	Testing, Indication
	64G1T	Zone 1 stator ground fault element timed out (derived from 64G1; see Figure 2.46)	Tripping, Control
	64G2	Zone 2 third-harmonic voltage stator ground fault element (third-harmonic voltage differential above or third-harmonic neutral voltage below pickup setting 64G2P; see Figure 2.46)	Testing, Indication
	64G2T	Zone 2 stator ground fault element timed out (derived from 64G2; see Figure 2.46)	Tripping, Control
	OOS	Out-of-step element (see Figures 2.48 and 2.51)	Indication
	60LOP	Loss of relaying potential	Indication, Control
	CLEN	Close Enable SELOGIC control equation (see Figure 4.8)	Indication
13	BKMON	Breaker Monitor initiating control equation (see Figure 3.11)	Testing
	BCW	BCW = BCWA + BCWB + BCWC	Indication
	BCWA	A-phase breaker contact wear has reached 100 percent wear level (see ***Breaker Monitor*** in ***Section 3: Auxiliary Function Settings***)	
	BCWB	B-phase breaker contact wear has reached 100 percent wear level (see ***Breaker Monitor*** in ***Section 3: Auxiliary Function Settings***)	
	BCWC	C-phase breaker contact wear has reached 100 percent wear level (see ***Breaker Monitor*** in ***Section 3: Auxiliary Function Settings***)	
	FAULT	Generator fault indication (halts Max/Min METER recording)	
	DCLO	Station dc battery instantaneous undervoltage element (see Figure 3.4)	
	DCHI	Station dc battery instantaneous overvoltage element (see Figure 3.4)	

Row	Bit	Definition	Primary Application
14	81D1	Level 1 instantaneous frequency element (with corresponding pickup setting 81D1P; see Figure 2.54)	Testing
	81D2	Level 2 instantaneous frequency element (with corresponding pickup setting 81D2P; see Figure 2.54)	
	81D3	Level 3 instantaneous frequency element (with corresponding pickup setting 81D3P; see Figure 2.54)	
	81D4	Level 4 instantaneous frequency element (with corresponding pickup setting 81D4P; see Figure 2.54)	
	81D5	Level 5 instantaneous frequency element (with corresponding pickup setting 81D5P; see Figure 2.54)	
	81D6	Level 6 instantaneous frequency element (with corresponding pickup setting 81D6P; see Figure 2.54)	
	3PO	Generator breaker three-pole open (indicated by 52A and relay current; see Figure 2.58)	Indication, Control
	52A	Generator Breaker Auxiliary Contact SELOGIC control equation (see Figure 2.58)	
15	81D1T	Level 1 definite-time frequency element 81D1T timed out (derived from 81D1; see Figure 2.54)	Tripping, Control
	81D2T	Level 2 definite-time frequency element 81D2T timed out (derived from 81D2; see Figure 2.54)	
	81D3T	Level 3 definite-time frequency element 81D3T timed out (derived from 81D3; see Figure 2.54)	
	81D4T	Level 4 definite-time frequency element 81D4T timed out (derived from 81D4; see Figure 2.54)	
	81D5T	Level 5 definite-time frequency element 81D5T timed out (derived from 81D5; see Figure 2.54)	
	81D6T	Level 6 definite-time frequency element 81D6T timed out (derived from 81D6; see Figure 2.54)	
	27B81	Undervoltage element for frequency element blocking (any phase voltage below pickup setting 27B81P; see Figure 2.53)	Indication, Control
	50L	Phase instantaneous overcurrent element for load detection (maximum phase current above pickup setting 50LP; see Figure 2.58)	

Row	Bit	Definition	Primary Application
16	ONLINE	Generator Online SELOGIC control equation (supervises abnormal frequency protection scheme; see Figure 2.56)	Indication
	BND1A	Abnormal frequency band 1 alarm (measured frequency between UBND1 and LBND1 settings; see Figure 2.56)	Testing, Indication
	BND1T	Abnormal frequency band 1 trip (accumulated off-frequency operating time in band 1 exceeds TBND1 setting; see Figure 2.56)	Tripping, Indication
	BND2A	Abnormal frequency band 2 alarm (measured frequency between LBND1 and LBND2 settings; see Figure 2.56)	Testing, Indication
	BND2T	Abnormal frequency band 2 trip (accumulated off-frequency operating time in band 2 exceeds TBND2 setting; see Figure 2.56)	Indication, Tripping
	BND3A	Abnormal frequency band 3 alarm (measured frequency between LBND2 and LBND3 settings; see Figure 2.56)	Testing, Indication
	BND3T	Abnormal frequency band 3 trip (accumulated off-frequency operating time in band 3 exceeds TBND3 setting; see Figure 2.56)	Indication, Tripping
	BNDA	BNDA = BND1A + BND2A + BND3A + BND4A + BND5A + BND6A	Testing, Indication
17	TRGTR	Target Reset front-panel button pressed	Control
	BND4A	Abnormal frequency band 4 alarm (measured frequency between LBND3 and LBND4 settings; see Figure 2.56)	Testing, Indication
	BND4T	Abnormal frequency band 4 trip (accumulated off-frequency operating time in band 4 exceeds TBND4 setting; see Figure 2.56)	Indication, Tripping
	BND5A	Abnormal frequency band 5 alarm (measured frequency between LBND4 and LBND5 settings; see Figure 2.56)	Testing, Indication
	BND5T	Abnormal frequency band 5 trip (accumulated off-frequency operating time in band 5 exceeds TBND5 setting; see Figure 2.56)	Indication, Tripping
	BND6A	Abnormal frequency band 6 alarm (measured frequency between LBND5 and LBND6 settings; see Figure 2.56)	Testing, Indication
	BND6T	Abnormal frequency band 6 trip (accumulated off-frequency operating time in band 6 exceeds TBND6 setting; see Figure 2.56)	Indication, Tripping
	BNDT	BNDT = BND1T + BND2T + BND3T + BND4T + BND5T + BND6T	

Row	Bit	Definition	Primary Application
18	TRIP	TRIP = TRIP1 + TRIP2 + TRIP3 + TRIP4	Indication
	TRIP1	TRIP1 logic output asserted (see Figure 4.6)	Output contact assignment
	TRIP2	TRIP2 logic output asserted (see Figure 4.6)	
	TRIP3	TRIP3 logic output asserted (see Figure 4.6)	
	TRIP4	TRIP4 logic output asserted (see Figure 4.6)	
	OC1**	Asserts 1/4 cycle for **OPEN 1** Command execution (see Figure 4.6)	Testing
	OC2**	Asserts 1/4 cycle for **OPEN 2** Command execution (see Figure 4.6)	
	OC3**	Asserts 1/4 cycle for **OPEN 3** Command execution (see Figure 4.6)	
19	TR1	SELOGIC control equation to initiate TRIP1 (see Figure 4.6)	Testing
	TR2	SELOGIC control equation to initiate TRIP2 (see Figure 4.6)	
	TR3	SELOGIC control equation to initiate TRIP3 (see Figure 4.6)	
	TR4	SELOGIC control equation to initiate TRIP4 (see Figure 4.6)	
	ULTR1	SELOGIC control equation to unlatch TRIP1 (see Figure 4.6)	
	ULTR2	SELOGIC control equation to unlatch TRIP2 (see Figure 4.6)	
	ULTR3	SELOGIC control equation to unlatch TRIP3 (see Figure 4.6)	
	ULTR4	SELOGIC control equation to unlatch TRIP4 (see Figure 4.6)	
20	LB1	Local Bit 1 asserted (see Figure 4.18)	Control via front panel—replacing traditional panel-mounted control switches
	LB2	Local Bit 2 asserted (see Figure 4.18)	
	LB3	Local Bit 3 asserted (see Figure 4.18)	
	LB4	Local Bit 4 asserted (see Figure 4.18)	
	LB5	Local Bit 5 asserted (see Figure 4.18)	
	LB6	Local Bit 6 asserted (see Figure 4.18)	
	LB7	Local Bit 7 asserted (see Figure 4.18)	
	LB8	Local Bit 8 asserted (see Figure 4.18)	

Row	Bit	Definition	Primary Application
21	LB9	Local Bit 9 asserted (see Figure 4.18)	Control via front panel—replacing traditional panel-mounted control switches
	LB10	Local Bit 10 asserted (see Figure 4.18)	
	LB11	Local Bit 11 asserted (see Figure 4.18)	
	LB12	Local Bit 12 asserted (see Figure 4.18)	
	LB13	Local Bit 13 asserted (see Figure 4.18)	
	LB14	Local Bit 14 asserted (see Figure 4.18)	
	LB15	Local Bit 15 asserted (see Figure 4.18)	
	LB16	Local Bit 16 asserted (see Figure 4.18)	
22	RB1	Remote Bit 1 asserted (see Figure 4.23)	Control via serial port
	RB2	Remote Bit 2 asserted (see Figure 4.23)	
	RB3	Remote Bit 3 asserted (see Figure 4.23)	
	RB4	Remote Bit 4 asserted (see Figure 4.23)	
	RB5	Remote Bit 5 asserted (see Figure 4.23)	
	RB6	Remote Bit 6 asserted (see Figure 4.23)	
	RB7	Remote Bit 7 asserted (see Figure 4.23)	
	RB8	Remote Bit 8 asserted (see Figure 4.23)	
23	RB9	Remote Bit 9 asserted (see Figure 4.23)	Control via serial port
	RB10	Remote Bit 10 asserted (see Figure 4.23)	
	RB11	Remote Bit 11 asserted (see Figure 4.23)	
	RB12	Remote Bit 12 asserted (see Figure 4.23)	
	RB13	Remote Bit 13 asserted (see Figure 4.23)	
	RB14	Remote Bit 14 asserted (see Figure 4.23)	
	RB15	Remote Bit 15 asserted (see Figure 4.23)	
	RB16	Remote Bit 16 asserted (see Figure 4.23)	
24	21CTC	Compensator distance element torque control (see Figure 2.10)	Indication
	21C1P	Zone 1 compensator distance element instantaneous pickup (see Figure 2.10)	Control, Indication
	21C1T	Zone 1 compensator distance element timed out (see Figure 2.10)	Tripping
	21C2P	Zone 2 compensator distance element instantaneous pickup (see Figure 2.10)	Control, Indication
	21C2T	Zone 2 compensator distance element timed out (see Figure 2.10)	Tripping
	ZLOAD	Load encroachment element pickup(see Figure 2.8)	Control
	T64G	64G2T Pickup for Ground Near Generator Terminals (see Figure 2.46)	Indication
	N64G	64G2T Pickup for Ground Near Neutral (see Figure 2.46)	

Row	Bit	Definition	Primary Application
25	SV1	SELOGIC control equation variable timer input SV1 asserted (see Figure 4.2)	Testing, seal-in functions, etc.
	SV2	SELOGIC control equation variable timer input SV2 asserted (see Figure 4.2)	
	SV3	SELOGIC control equation variable timer input SV3 asserted (see Figure 4.2)	
	SV4	SELOGIC control equation variable timer input SV4 asserted (see Figure 4.2)	
	SV1T	SELOGIC control equation variable timer output SV1T asserted (see Figure 4.2)	Control
	SV2T	SELOGIC control equation variable timer output SV2T asserted (see Figure 4.2)	
	SV3T	SELOGIC control equation variable timer output SV3T asserted (see Figure 4.2)	
	SV4T	SELOGIC control equation variable timer output SV4T asserted (see Figure 4.2)	
26	SV5	SELOGIC control equation variable timer input SV5 asserted (see Figure 4.2)	Testing, seal-in functions, etc.
	SV6	SELOGIC control equation variable timer input SV6 asserted (see Figure 4.2)	
	SV7	SELOGIC control equation variable timer input SV7 asserted (see Figure 4.2)	
	SV8	SELOGIC control equation variable timer input SV8 asserted (see Figure 4.2)	
	SV5T	SELOGIC control equation variable timer output SV5T asserted (see Figure 4.2)	Control
	SV6T	SELOGIC control equation variable timer output SV6T asserted (see Figure 4.2)	
	SV7T	SELOGIC control equation variable timer output SV7T asserted (see Figure 4.2)	
	SV8T	SELOGIC control equation variable timer output SV8T asserted (see Figure 4.2)	

Row	Bit	Definition	Primary Application
27	SV9	SELOGIC control equation variable timer input SV9 asserted (see Figure 4.2)	Testing, seal-in functions, etc.
	SV10	SELOGIC control equation variable timer input SV10 asserted (see Figure 4.2)	
	SV11	SELOGIC control equation variable timer input SV11 asserted (see Figure 4.2)	
	SV12	SELOGIC control equation variable timer input SV12 asserted (see Figure 4.2)	
	SV9T	SELOGIC control equation variable timer output SV9T asserted (see Figure 4.2)	Control
	SV10T	SELOGIC control equation variable timer output SV10T asserted (see Figure 4.2)	
	SV11T	SELOGIC control equation variable timer output SV11T asserted (see Figure 4.2)	
	SV12T	SELOGIC control equation variable timer output SV12T asserted (see Figure 4.2)	
28	SV13	SELOGIC control equation variable timer input SV13 asserted (see Figure 4.2)	Testing, seal-in functions, etc.
	SV14	SELOGIC control equation variable timer input SV14 asserted (see Figure 4.2)	
	SV15	SELOGIC control equation variable timer input SV15 asserted (see Figure 4.2)	
	SV16	SELOGIC control equation variable timer input SV16 asserted (see Figure 4.2)	
	SV13T	SELOGIC control equation variable timer output SV13T asserted (see Figure 4.2)	Control
	SV14T	SELOGIC control equation variable timer output SV14T asserted (see Figure 4.2)	
	SV15T	SELOGIC control equation variable timer output SV15T asserted (see Figure 4.2)	
	SV16T	SELOGIC control equation variable timer output SV16T asserted (see Figure 4.2)	
29	DP8	Display Point 8 asserted	Front-panel text display
	DP7	Display Point 7 asserted	
	DP6	Display Point 6 asserted	
	DP5	Display Point 5 asserted	
	DP4	Display Point 4 asserted	
	DP3	Display Point 3 asserted	
	DP2	Display Point 2 asserted	
	DP1	Display Point 1 asserted	

Row	Bit	Definition	Primary Application
30	DP16	Display Point 16 asserted	Front-panel text display
	DP15	Display Point 15 asserted	
	DP14	Display Point 14 asserted	
	DP13	Display Point 13 asserted	
	DP12	Display Point 12 asserted	
	DP11	Display Point 11 asserted	
	DP10	Display Point 10 asserted	
	DP9	Display Point 9 asserted	
31	ER	Event Report Trigger SELOGIC control equation	Testing
	OOST	Out-of-step trip	Tripping
	IN106	Optoisolated input IN106 asserted (see Figure 3.12)	Circuit breaker status, control via optoisolated inputs
	IN105	Optoisolated input IN105 asserted (see Figure 3.12)	
	IN104	Optoisolated input IN104 asserted (see Figure 3.12)	
	IN103	Optoisolated input IN103 asserted (see Figure 3.12)	
	IN102	Optoisolated input IN102 asserted (see Figure 3.12)	
	IN101	Optoisolated input IN101 asserted (see Figure 3.12)	
32	ALARM	ALARM output contact indicating that relay failed or **PULSE ALARM** command executed (see Figure 4.16 and Figure 4.17)	Indication
	OUT107	Output contact OUT107 asserted (see Figure 4.16)	
	OUT106	Output contact OUT106 asserted (see Figure 4.16)	
	OUT105	Output contact OUT105 asserted (see Figure 4.16)	
	OUT104	Output contact OUT104 asserted (see Figure 4.16)	
	OUT103	Output contact OUT103 asserted (see Figure 4.16)	
	OUT102	Output contact OUT102 asserted (see Figure 4.16)	
	OUT101	Output contact OUT101 asserted (see Figure 4.16)	
33	87B	SELOGIC control equation to block restrained differential elements (see Figures 13.5, 13.6, 13.7)	Testing
	87BL1	1 Second-Harmonic Block (see Figure 13.4)	
	87BL2	2 Second-Harmonic Block (see Figure 13.4)	
	87BL3	3 Second-Harmonic Block (see Figure 13.4)	
	87R	When IHBL = Y: 87R = (87R1*!87BL1*!87B) + (87R2*!87BL2*!87B) + (87R3*!87BL3*!87B) When IHBL = N: 87R = (87R1 + 87R2 + 87R3) * !(87BL1+87BL2+87BL3+87B) (see Figures 13.5, 13.6, 13.7)	Tripping, Control
	87R1	1 restrained differential element (see Figure 13.4)	Testing, Indication
	87R2	2 restrained differential element (see Figure 13.4)	
	87R3	2 restrained differential element (see Figure 13.4)	

Row	Bit	Definition	Primary Application
34	87U	87U = 87U1 + 87U2 + 87U3 (see Figure 13.4)	Tripping
	87U1 87U2 87U3	1 unrestrained differential element (see Figure 13.4) 2 unrestrained differential element (see Figure 13.4) 3 unrestrained differential element (see Figure 13.4)	Testing, Indication
	50H1	Level 1 87-input phase instantaneous overcurrent element pickup (maximum phase current above 50H1P setting; see Figure 2.27)	Control, Indication
	50H1T	Level 1 87-input phase definite-time overcurrent element timed out (derived from 50H1; see Figure 2.27)	Tripping, Control, Indication
	50H2	Level 2 87-input phase instantaneous overcurrent element pickup (maximum phase current above 50H2P setting; see Figure 2.27)	Control, Indication
	50H2T	Level 2 87-input phase definite-time overcurrent element timed out (derived from 50H2; see Figure 2.27)	Tripping, Control, Indication
35	50Q1	Level 1 87-input negative-sequence instantaneous overcurrent element pickup (negative-sequence current above 50Q1P setting; see Figure 2.27)	Control, Indication
	50Q1T	Level 1 87-input negative-sequence definite-time overcurrent element timed out (derived from 50Q1; see Figure 2.27)	Tripping, Control, Indication
	50Q2	Level 2 87-input negative-sequence instantaneous overcurrent element pickup (negative-sequence current above 50Q2P setting; see Figure 2.27)	Control, Indication
	50Q2T	Level 2 87-input negative-sequence definite-time overcurrent element timed out (derived from 50Q2; see Figure 2.27)	Tripping, Control, Indication
	50R1	Level 1 87-input residual instantaneous overcurrent element pickup (negative-sequence current above 50R1P setting; see Figure 2.27)	Control, Indication
	50R1T	Level 1 87-input residual definite-time overcurrent element timed out (derived from 50R1; see Figure 2.27)	Tripping, Control, Indication
	50R2	Level 2 87-input residual instantaneous overcurrent element pickup (residual current above 50R2P setting; see Figure 2.27)	Control, Indication
	50R2T	Level 2 87-input residual definite-time overcurrent element timed out (derived from 50R2; see Figure 2.27)	Tripping, Control, Indication

Row	Bit	Definition	Primary Application
36	59VP	Generator terminal voltage within voltage window (see Figure 4.10)	Control, Testing
	59VS	System voltage within voltage window (see Figure 4.10)	Testing, Indication
	CFA	Close Failure Angle Condition (see Figure 4.13, Figure 4.15)	Testing
	BKRCF	Breaker close failed (see Figure 4.14)	Control, Testing
	BSYNCH	SELOGIC control equation to block synch-check (see Figure 4.12)	Testing
	25C	Initiate CLOSE to match target close angle (see Figure 4.13)	Control, Testing
	25A1	Slip/Breaker-time compensated phase angle less than 25ANG1 setting (see Figure 4.13)	Control, Indication, Testing
	25A2	Uncompensated phase angle less than 25ANG2 setting (see Figure 4.13)	Control, Indication, Testing
37	59PP2	Level 2 phase-to-phase instantaneous overvoltage element (any phase-to-phase voltage above pickup setting 59PP2; see Figure 2.44)	Control, Indication
	27PP2	Level 2 phase-to-phase instantaneous undervoltage element (any phase-to-phase voltage below pickup setting 27PP2; see Figure 2.43)	
	SF	Slip frequency within acceptable bounds (see Figure 4.12)	
	VDIF	Generator and system voltage difference within acceptable bounds (see Figure 4.10)	Indication, Testing
	GENVHI	Generator voltage greater than system voltage (see Figure 4.10)	
	GENVLO	Generator voltage less than system voltage (see Figure 4.10)	
	GENFHI	Slip frequency greater than 25SHI setting (see Figure 4.12)	
	GENFLO	Slip frequency less than 25SLO setting (see Figure 4.12)	
38	87NTC	Ground differential torque control (see Figure 13.1)	Indication
	87N1P	Level 1 ground differential instantaneous element pickup (see Figure 13.1)	Control, Indication
	87N1T	Level 1 ground differential element timed out (see Figure 13.1)	Tripping
	87N2P	Level 2 ground differential instantaneous element pickup (see Figure 13.1)	Control, Indication
	87N2T	Level 2 ground differential element timed out (see Figure 13.1)	Tripping
	MPP1P	Zone 1 phase-phase compensator distance element pickup (see Figure 2.10)	Indication
	MABC1P	Zone 1 three-phase compensator distance element pickup (see Figure 2.10)	
	27VS	Synch voltage input (VS) undervoltage (see Figure 4.10)	Indication, Control

Row	Bit	Definition	Primary Application
39	21PTC	Phase distance element torque control (see Figure 2.7)	Indication
	21P1P	Zone 1 phase distance element instantaneous pickup (see Figure 2.7)	Control, Indication
	21P1T	Zone 1 phase distance element timed out (see Figure 2.7)	Tripping
	21P2P	Zone 2 phase distance element instantaneous pickup (see Figure 2.7)	Control, Indication
	21P2T	Zone 2 phase distance element timed out (see Figure 2.7)	Tripping
	MPP2P	Zone 2 phase-phase compensator distance element pickup (see Figure 2.10)	Indication
	MABC2P	Zone 2 three-phase compensator distance element pickup (see Figure 2.10)	
	*	Not used	
40	IN208	Optoisolated input IN208 asserted (see Figure 3.13)	Control via optional optoisolated inputs
	IN207	Optoisolated input IN207 asserted (see Figure 3.13)	
	IN206	Optoisolated input IN206 asserted (see Figure 3.13)	
	IN205	Optoisolated input IN205 asserted (see Figure 3.13)	
	IN204	Optoisolated input IN204 asserted (see Figure 3.13)	
	IN203	Optoisolated input IN203 asserted (see Figure 3.13)	
	IN202	Optoisolated input IN202 asserted (see Figure 3.13)	
	IN201	Optoisolated input IN201 asserted (see Figure 3.13)	
41	64FTC	Field Ground Protection Torque Control (see Figure 2.47)	Indication
	64F1	Level 1 Field Ground Protection Element Instantaneous Pickup	Control, Indication
	64F1T	Level 1 Field Ground Protection Element Timed Out (see Figure 2.47)	Alarm
	64F2	Level 2 Field Ground Protection Element Instantaneous Pickup	Control, Indication
	64F2T	Level 2 Field Ground Protection Element Timed Out (see Figure 2.47)	Tripping
	64FFLT	Indicate a non-functional SEL-2664 or fiber optic connection	Indication
	*	Not used	
	*	Not used	
42	OUT201	Output contact OUT201 asserted (see Figure 4.17)	Indication
	OUT202	Output contact OUT202 asserted (see Figure 4.17)	
	OUT203	Output contact OUT203 asserted (see Figure 4.17)	
	OUT204	Output contact OUT204 asserted (see Figure 4.17)	
	OUT205	Output contact OUT205 asserted (see Figure 4.17)	
	OUT206	Output contact OUT206 asserted (see Figure 4.17)	
	OUT207	Output contact OUT207 asserted (see Figure 4.17)	
	OUT208	Output contact OUT208 asserted (see Figure 4.17)	

Row	Bit	Definition	Primary Application
43	OUT209	Output contact OUT209 asserted (see Figure 4.17)	Indication
	OUT210	Output contact OUT210 asserted (see Figure 4.17)	
	OUT211	Output contact OUT211 asserted (see Figure 4.17)	
	OUT212	Output contact OUT212 asserted (see Figure 4.17)	
	*	Not used	
	*	Not used	
	*	Not used	
	*	Not used	
44	50H2A	IA87 phase instantaneous overcurrent element pickup (see Figure 2.27)	Control
	50H2B	IB87 phase instantaneous overcurrent element pickup (see Figure 2.27)	
	50H2C	IC87 phase instantaneous overcurrent element pickup (see Figure 2.27)	
	*	Not used	
	*	Not used	
	*	Not used	
	*	Not used	
	*	Not used	
45	*	Not used	
	*	Not used	
	*	Not used	
	*	Not used	
	*	Not used	
	*	Not used	
	*	Not used	
	*	Not used	
46	SET1	Set Latch Bit 1 (see Figure 4.4)	Control Latch Bits
	SET2	Set Latch Bit 2 (see Figure 4.4)	
	SET3	Set Latch Bit 3 (see Figure 4.4)	
	SET4	Set Latch Bit 4 (see Figure 4.4)	
	SET5	Set Latch Bit 5 (see Figure 4.4)	
	SET6	Set Latch Bit 6 (see Figure 4.4)	
	SET7	Set Latch Bit 7 (see Figure 4.4)	
	SET8	Set Latch Bit 8 (see Figure 4.4)	

Row	Bit	Definition	Primary Application
47	SET9	Set Latch Bit 9 (see Figure 4.4)	Control Latch Bits
	SET10	Set Latch Bit 10 (see Figure 4.4)	
	SET11	Set Latch Bit 11 (see Figure 4.4)	
	SET12	Set Latch Bit 12 (see Figure 4.4)	
	SET13	Set Latch Bit 13 (see Figure 4.4)	
	SET14	Set Latch Bit 14 (see Figure 4.4)	
	SET15	Set Latch Bit 15 (see Figure 4.4)	
	SET16	Set Latch Bit 16 (see Figure 4.4)	
48	RST1	Reset Latch Bit 1 (see Figure 4.4)	Control Latch Bits
	RST2	Reset Latch Bit 2 (see Figure 4.4)	
	RST3	Reset Latch Bit 3 (see Figure 4.4)	
	RST4	Reset Latch Bit 4 (see Figure 4.4)	
	RST5	Reset Latch Bit 5 (see Figure 4.4)	
	RST6	Reset Latch Bit 6 (see Figure 4.4)	
	RST7	Reset Latch Bit 7 (see Figure 4.4)	
	RST8	Reset Latch Bit 8 (see Figure 4.4)	
49	RST9	Reset Latch Bit 9 (see Figure 4.4)	Control Latch Bits
	RST10	Reset Latch Bit 10 (see Figure 4.4)	
	RST11	Reset Latch Bit 11 (see Figure 4.4)	
	RST12	Reset Latch Bit 12 (see Figure 4.4)	
	RST13	Reset Latch Bit 13 (see Figure 4.4)	
	RST14	Reset Latch Bit 14 (see Figure 4.4)	
	RST15	Reset Latch Bit 15 (see Figure 4.4)	
	RST16	Reset Latch Bit 16 (see Figure 4.4)	
50	LT1	Latch Bit 1 asserted (see Figure 4.4)	Control via SELOGIC control equation—replacing traditional panel-mounted latching relays
	LT2	Latch Bit 2 asserted (see Figure 4.4)	
	LT3	Latch Bit 3 asserted (see Figure 4.4)	
	LT4	Latch Bit 4 asserted (see Figure 4.4)	
	LT5	Latch Bit 5 asserted (see Figure 4.4)	
	LT6	Latch Bit 6 asserted (see Figure 4.4)	
	LT7	Latch Bit 7 asserted (see Figure 4.4)	
	LT8	Latch Bit 8 asserted (see Figure 4.4)	
51	LT9	Latch Bit 9 asserted (see Figure 4.4)	Control via SELOGIC control equation—replacing traditional panel-mounted latching relays
	LT10	Latch Bit 10 asserted (see Figure 4.4)	
	LT11	Latch Bit 11 asserted (see Figure 4.4)	
	LT12	Latch Bit 12 asserted (see Figure 4.4)	
	LT13	Latch Bit 13 asserted (see Figure 4.4)	
	LT14	Latch Bit 14 asserted (see Figure 4.4)	
	LT15	Latch Bit 15 asserted (see Figure 4.4)	
	LT16	Latch Bit 16 asserted (see Figure 4.4)	

Row	Bit	Definition	Primary Application
52	OTHTRIP OTHALRM	Other Temperature Trip and Alarm. OTHTRIP asserts when any healthy other RTD temperature exceeds its trip setpoint. OTHALRM asserts when any healthy other RTD temperature exceeds its alarm setpoint.	Tripping, Indication, SER Triggering
	AMBTRIP AMBALRM	Ambient Temperature Trip and Alarm. AMBTRIP asserts when the healthy ambient RTD temperature exceeds its trip setpoint. AMBALRM asserts when the healthy ambient RTD temperature exceeds its alarm setpoint.	
	BRGTRIP BRGALRM	Bearing Temperature Trip and Alarm. BRGTRIP asserts when one or two (when EBRGV = Y) healthy winding RTD temperatures exceed their trip or biased trip (when RTDBIAS ≠ NONE) setpoints. BRGALRM asserts when any healthy bearing RTD temperature exceeds its alarm setpoint, or biased alarm setpoint.	
	WDGTRIP WDGALRM	Winding Temperature Trip and Alarm. WDGTRIP asserts when one or two (when EWDGV = Y) healthy winding RTD temperatures exceed their trip or biased trip (when RTDBIAS ≠ NONE) setpoints. WDGALRM asserts when any healthy winding RTD temperature exceeds its alarm setpoint, or biased alarm setpoint.	
53	RTDFLT	Asserts when an open or short circuit condition is detected on any enabled RTD input, or communication with the SEL-2600 Series RTD Module has been interrupted.	Indication, SER Triggering
	*	Not used	
	*	Not used	
	*	Not used	
	*	Not used	
	*	Not used	
	*	Not used	
	2600IN	Contact input 2600IN from the SEL-2600 Series RTD Module.	Control, Indication

Row	Bit	Definition	Primary Application
54	RTD4TR	RTD4 Trip	Tripping, Indication
	RTD4AL	RTD4 Alarm	
	RTD3TR	RTD3 Trip	
	RTD3AL	RTD3 Alarm	
	RTD2TR	RTD2 Trip	
	RTD2AL	RTD2 Alarm	
	RTD1TR	RTD1 Trip	
	RTD1AL	RTD1 Alarm	
55	RTD8TR	RTD8 Trip	
	RTD8AL	RTD8 Alarm	
	RTD7TR	RTD7 Trip	
	RTD7AL	RTD7 Alarm	
	RTD6TR	RTD6 Trip	
	RTD6AL	RTD6 Alarm	
	RTD5TR	RTD5 Trip	
	RTD5AL	RTD5 Alarm	
56	RTD12TR	RTD12 Trip	
	RTD12AL	RTD12 Alarm	
	RTD11TR	RTD11 Trip	
	RTD11AL	RTD11 Alarm	
	RTD10TR	RTD10 Trip	
	RTD10AL	RTD10 Alarm	
	RTD9TR	RTD9 Trip	
	RTD9AL	RTD9 Alarm	

** The Open Command (Relay Word bit OC*n*) and Close Command (Relay Word bit CC) are already embedded in the Trip Logic (see Figure 4.6) and Close Logic (see Figure 4.8), respectively. Thus, they are not used in SELOGIC control equations. They are in the Relay Word for embedded event report information functions.

TABLE OF CONTENTS

SECTION 5: INSTALLATION 5-1

Relay Mounting 5-1
Rack Mount 5-1
Panel Mount 5-1
Making Rear-Panel Connections 5-13
Required Equipment and General Connect Information 5-13
Chassis Ground 5-16
Power Supply 5-16
Output Contacts 5-16
Optoisolated Inputs 5-17
Current Transformer Inputs (screw-terminal block models) 5-18
Current Transformer Inputs (Connectorized models) 5-18
Potential Transformer Inputs 5-19
Serial Communications Ports 5-19
IRIG-B Time-Code Input 5-21
Example AC and DC Connection Diagrams 5-22
Circuit Board Jumpers and Battery 5-28
Accessing the Relay Main Board (All Models) and Extra I/O Board (Models 0300G_1 and 0300G_Y) 5-28
Output Contact Jumpers 5-32
"Extra Alarm" Output Contact Control Jumper 5-32
Password and Breaker Jumpers 5-33
EIA-232 Serial Port Voltage Jumpers 5-34
Clock Battery 5-35

TABLES

Table 5.1: Communication Cables to Connect the SEL-300G Relay to Other Devices 5-20
Table 5.2: Output Contact Jumpers and Corresponding Output Contacts 5-32
Table 5.3: "Extra Alarm" Output Contacts and Corresponding Controlling Jumpers 5-32
Table 5.4: Required Position of Jumper JMP23 for Desired Output Contact OUT107 Operation (Models 0300G_0 and 0300G_1) 5-33
Table 5.5: Password and Breaker Jumper Positions for Standard Relay Shipments 5-33
Table 5.6: Password and Breaker Jumper Operation 5-34
Table 5.7: EIA-232 Serial Port Voltage Jumper Positions for Standard Relay Shipments 5-34

FIGURES

Figure 5.1: SEL-300G Relay Dimensions and Panel Mount Cut-Out 5-2
Figure 5.2: SEL-300G Relay Front-Panel Drawings for Rack-Mount Relays (2U and 3U), Screw-Terminal Block, and Connectorized Versions 5-3
Figure 5.3: SEL-300G Relay Front-Panel Drawings for Panel-Mount Relays (2U and 3U), Screw-Terminal Block, and Connectorized Versions 5-4

Figure 5.4: SEL-300G0 Relay Rear-Panel Drawings for Rack- and Panel-Mount Relays (2U and 3U), Screw-Terminal Block Version 5-5
Figure 5.5: SEL-300G1 Relay Rear-Panel Drawings for Rack- and Panel-Mount Relays (2U and 3U), Screw-Terminal Block Version 5-6
Figure 5.6: SEL-300G2 Relay Rear-Panel Drawings for Rack- and Panel-Mount Relays (2U and 3U), Screw-Terminal Block Version 5-7
Figure 5.7: SEL-300G3 Relay Rear-Panel Drawings for Rack- and Panel-Mount Relays (2U and 3U), Screw-Terminal Block Version 5-8
Figure 5.8: SEL-300G0 Relay Rear-Panel Drawings for Rack- and Panel-Mount Relays (2U and 3U), Connectorized Version 5-9
Figure 5.9: SEL-300G1 Relay Rear-Panel Drawings for Rack- and Panel-Mount Relays (2U and 3U), Connectorized Version 5-10
Figure 5.10: SEL-300G2 Relay Rear-Panel Drawings for Rack- and Panel-Mount Relays (2U and 3U), Connectorized Version 5-11
Figure 5.11: SEL-300G3 Relay Rear-Panel Drawings for Rack- and Panel-Mount Relays (2U and 3U), Connectorized Version 5-12
Figure 5.12: SEL-300G Relay Connectorized Coding (Top View; Models 0300G_W and 0300G_Y) 5-15
Figure 5.13 Rear-Panel EIA-485 Serial Port #1 Connections (2-wire Modbus Example) 5-19
Figure 5.14: SEL-300G1 Relay AC Connection Example—High-Impedance Grounded Generator With Current Differential Protection 5-22
Figure 5.15: SEL-300G0 Relay AC Connection Example—High-Impedance Grounded Generator Without Current Differential Protection 5-22
Figure 5.16: SEL-300G1 Relay AC Connection Example—High-Impedance Grounded Generator With Step-Up Transformer Included in Differential Zone 5-23
Figure 5.17: SEL-300G0 Relay AC Connection Example—Resistance Grounded Generator With Ground Differential Protection (87N) 5-23
Figure 5.18: SEL-300G0 Relay AC Connection Example—Solidly Grounded Generator With Ground Differential Protection (87N) 5-24
Figure 5.19: SEL-300G1 Relay AC Connection Example—High-Impedance Grounded Generator With Split-Phase Current Differential Protection 5-24
Figure 5.20: SEL-300G1 Relay Applied Using Open-Delta Potentials 5-25
Figure 5.21: SEL-300G2 Relay High-Impedance Grounded Generator With Synch-Check and Without Current Differential Protection 5-25
Figure 5.22: SEL-300G1 Relay High-Impedance Grounded Generator With Split-Phase, Self-Balancing Differential Protection 5-26
Figure 5.23: SEL-300G2 Relay Solidly Grounded Generator With Ground Differential (87N) and Synch-Check 5-26
Figure 5.24: SEL-300G3 Relay AC Connection Example—High-Impedance Grounded Generator With Open-Delta PTs, Step-Up Transformer Included in Differential Zone, and Synch-Check 5-27
Figure 5.25: SEL-300G Relay DC Connection Example 5-27
Figure 5.26: Jumper, Connector, and Major Component Locations on the SEL-300G Relay Main Board (All Models) 5-29
Figure 5.27: Jumper, Connector, and Major Component Locations on the SEL-300G Relay Extra I/O Board (Model 0300G_1, Screw Terminal Block Version) 5-30
Figure 5.28: Jumper, Connector, and Major Component Locations on the SEL-300G Relay Extra I/O Board (Model 0300G_Y, Plug-In Connector Version) 5-31

SECTION 5: INSTALLATION

Design your installation using the mounting and connection information in this section. Options include rack or panel mounting and terminal block or plug-in connector (Connectorized®) wiring. This section also includes information on configuring the relay for your application.

RELAY MOUNTING

Rack Mount

We offer the SEL-300G Relay in a rack-mount version that bolts easily into a standard 19-inch rack (see Figure 5.1). From the front of the relay, insert four rack screws (two on each side) through the holes on the relay mounting flanges.

Reverse the relay mounting flanges to cause the relay to project 2.75 inches (69.9 mm) from the front of your mounting rack and provide additional space at the rear of the relay for applications where the relay might otherwise be too deep to fit.

Panel Mount

We also offer the SEL-300G in a panel-mount version for a clean look. Panel-mount relays have sculpted front-panel molding that covers all installation holes (see Figure 5.1). Cut your panel and drill mounting holes according to the dimensions in Figure 5.1. Insert the relay into the cutout, aligning four relay mounting studs on the rear of the relay front panel with the drilled holes in your panel, and use nuts to secure the relay to your panel.

The projection panel-mount option covers all installation holes and maintains the sculpted look of the panel-mount option; the relay projects 2.75 inches (69.9 mm) from the front of your panel. This ordering option increases space at the rear of the relay for applications where the relay would ordinarily be too deep to fit your cabinet.

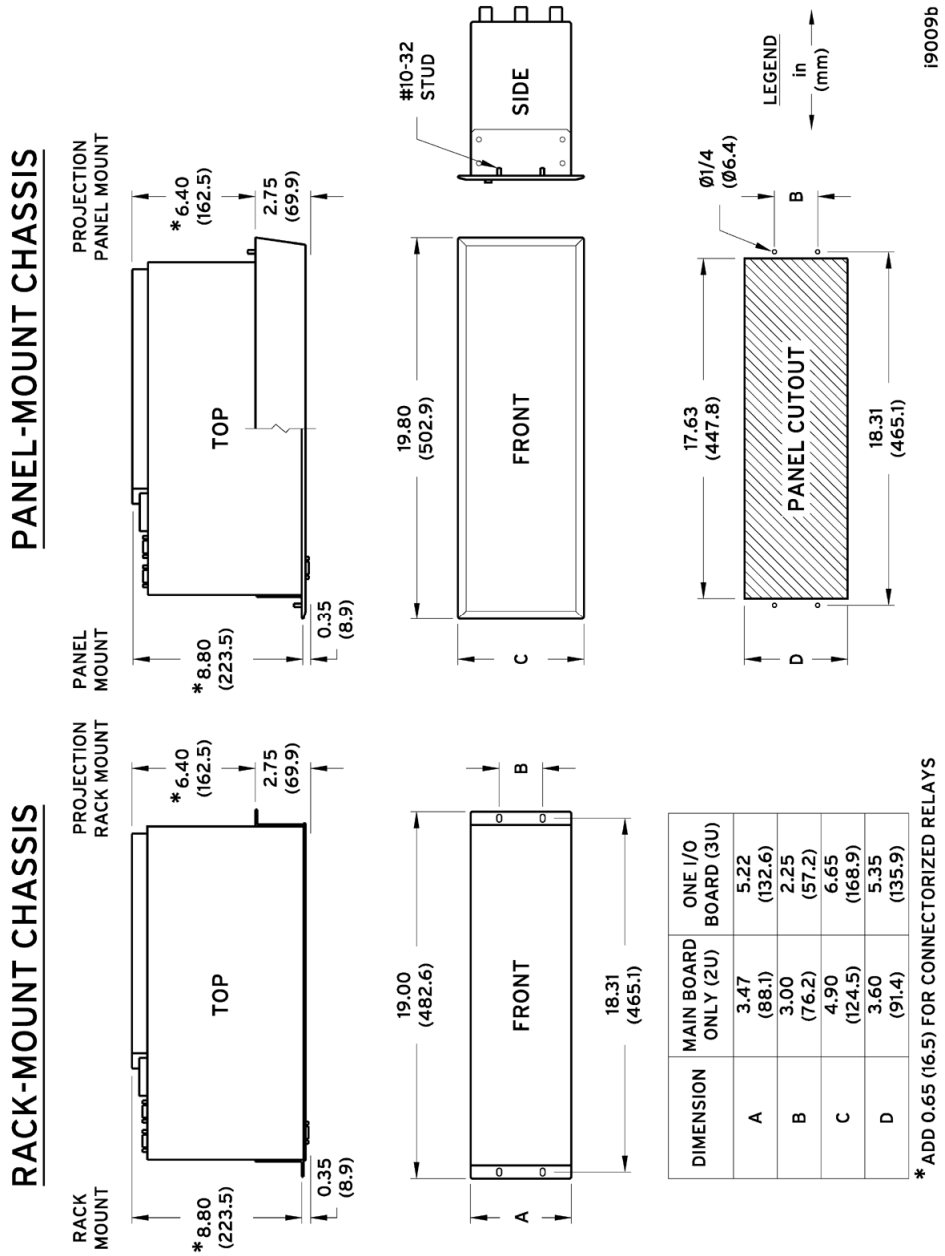

DIMENSION	MAIN BOARD ONLY (2U)	ONE I/O BOARD (3U)
A	3.47 (88.1)	5.22 (132.6)
B	3.00 (76.2)	2.25 (57.2)
C	4.90 (124.5)	6.65 (168.9)
D	3.60 (91.4)	5.35 (135.9)

Figure 5.1: SEL-300G Relay Dimensions and Panel Mount Cut-Out

To better use Figure 5.1, refer to Table 1.3 for rack unit height information on the SEL-300G models (2U or 3U, screw-terminal block or Connectorized option).

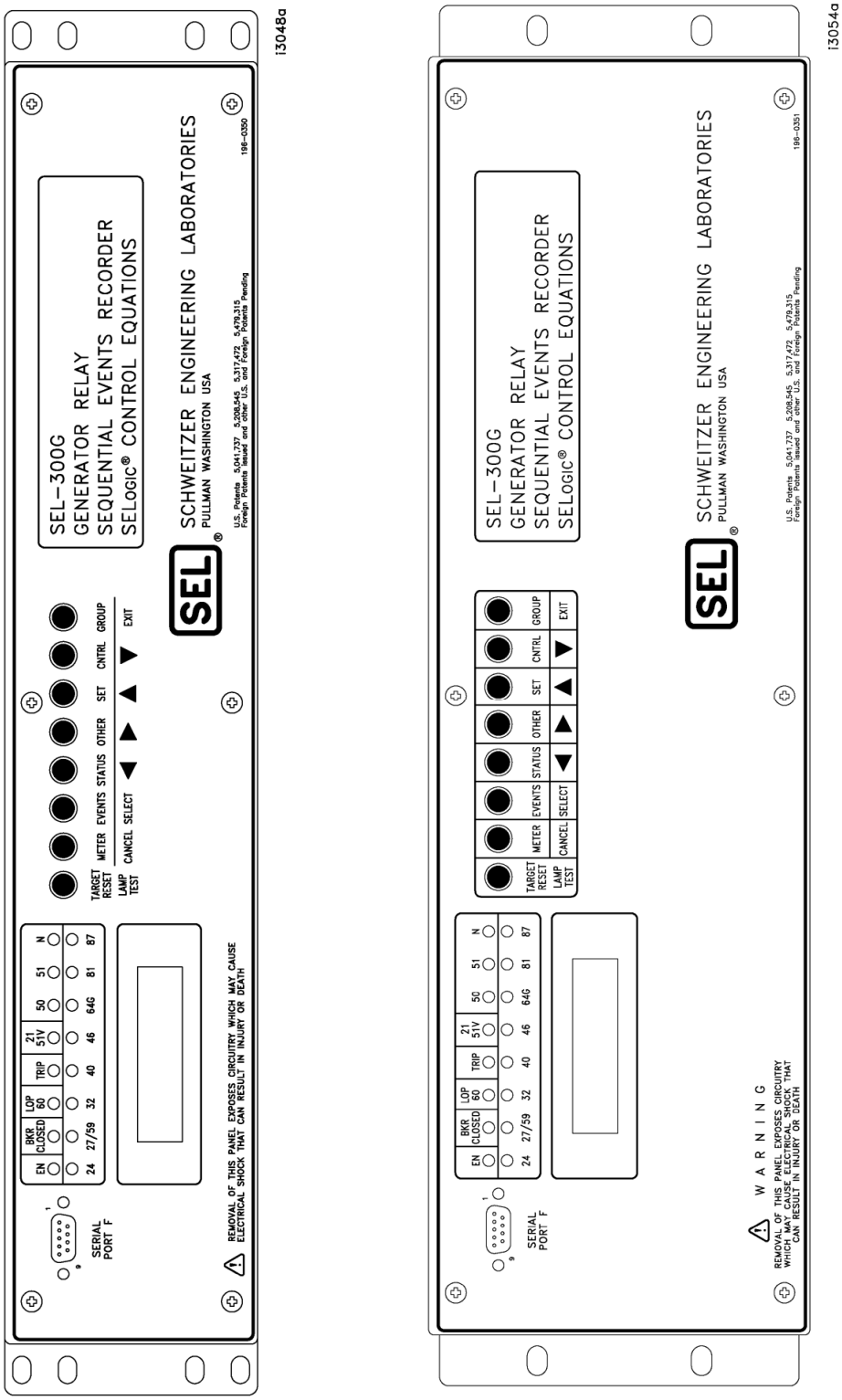

Figure 5.2: SEL-300G Relay Front-Panel Drawings for Rack-Mount Relays (2U and 3U), Screw-Terminal Block, and Connectorized Versions

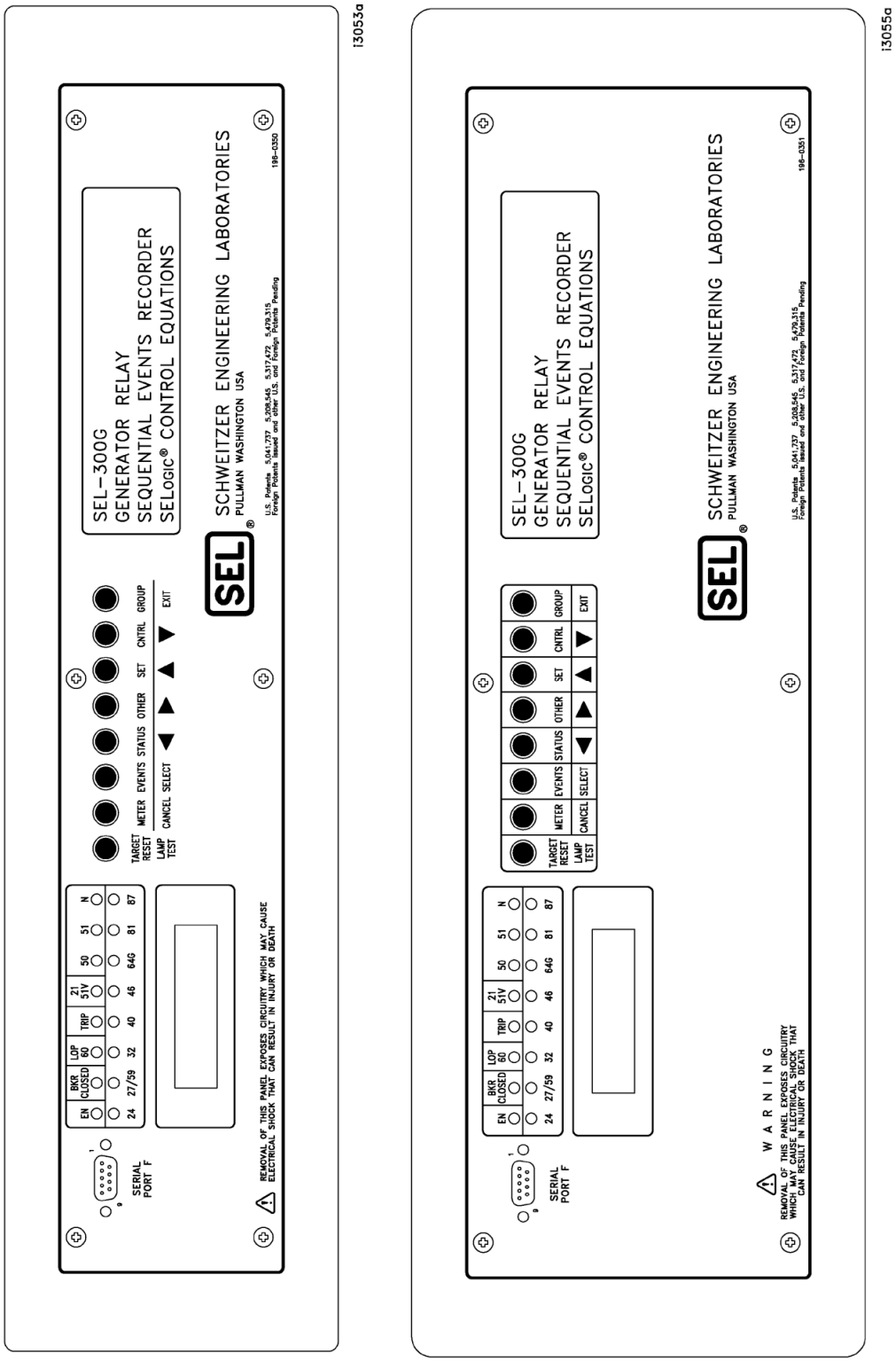

Figure 5.3: SEL-300G Relay Front-Panel Drawings for Panel-Mount Relays (2U and 3U), Screw-Terminal Block, and Connectorized Versions

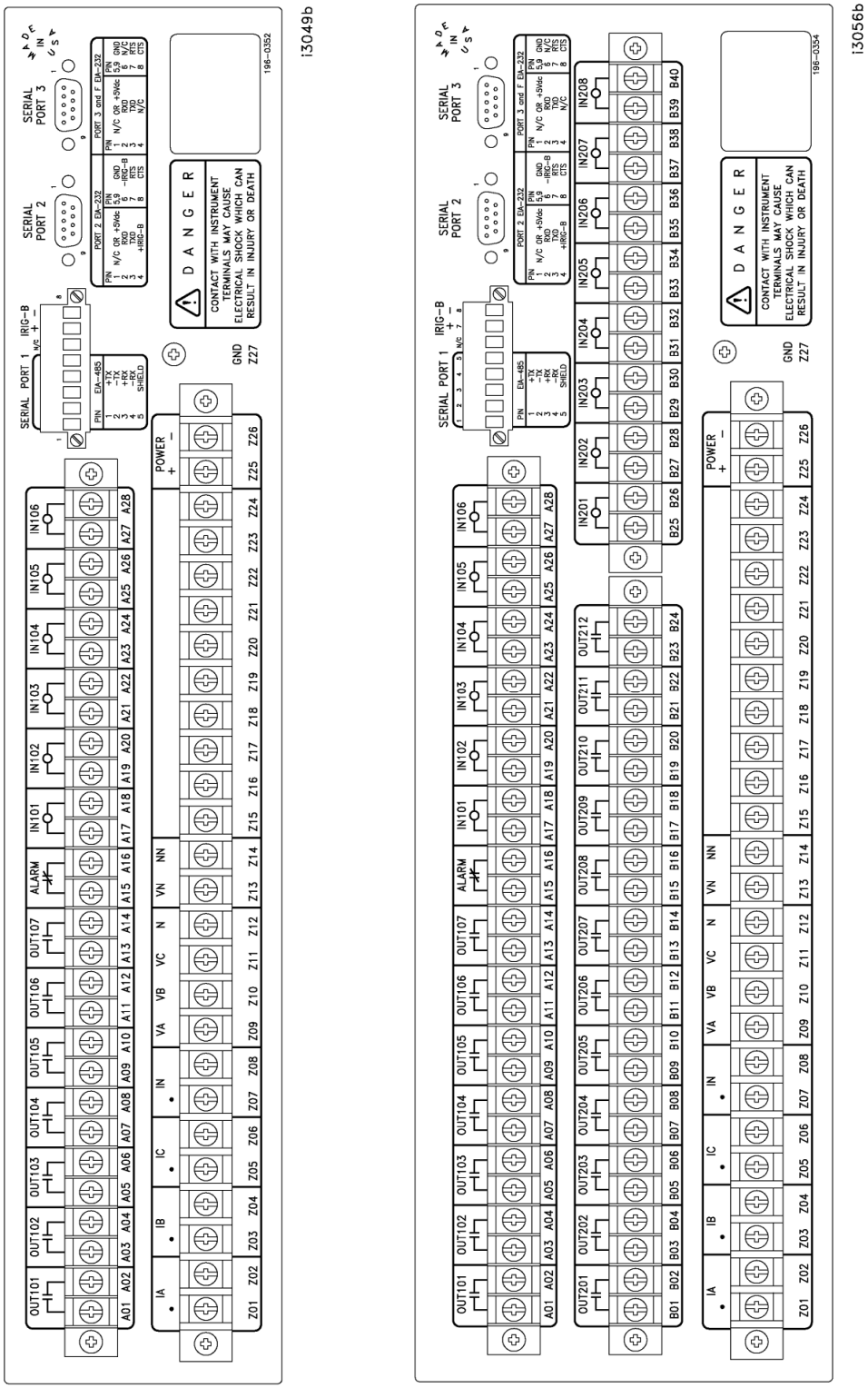

Figure 5.4: SEL-300G0 Relay Rear-Panel Drawings for Rack- and Panel-Mount Relays (2U and 3U), Screw-Terminal Block Version

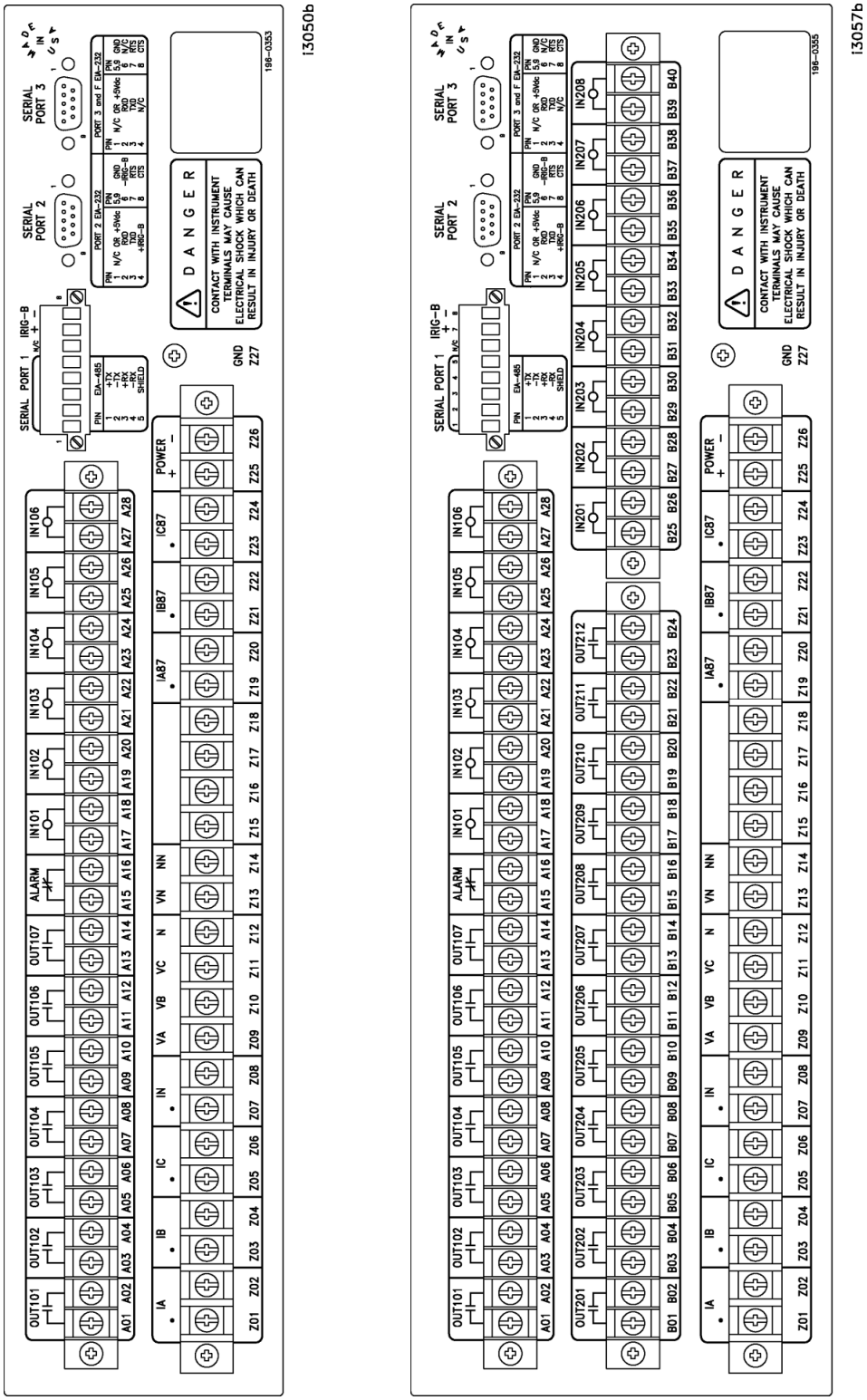

Figure 5.5: SEL-300G1 Relay Rear-Panel Drawings for Rack- and Panel-Mount Relays (2U and 3U), Screw-Terminal Block Version

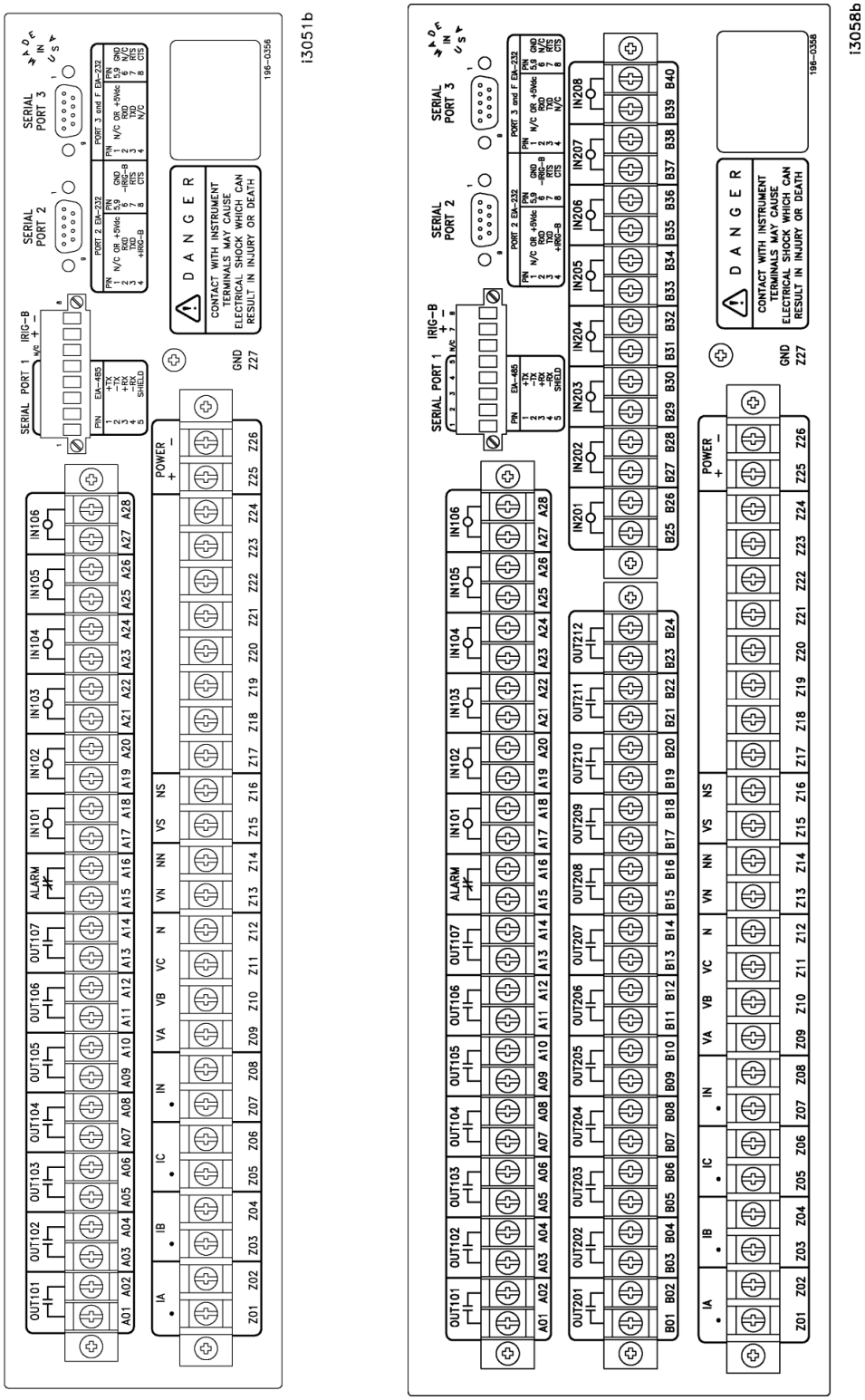

Figure 5.6: SEL-300G2 Relay Rear-Panel Drawings for Rack- and Panel-Mount Relays (2U and 3U), Screw-Terminal Block Version

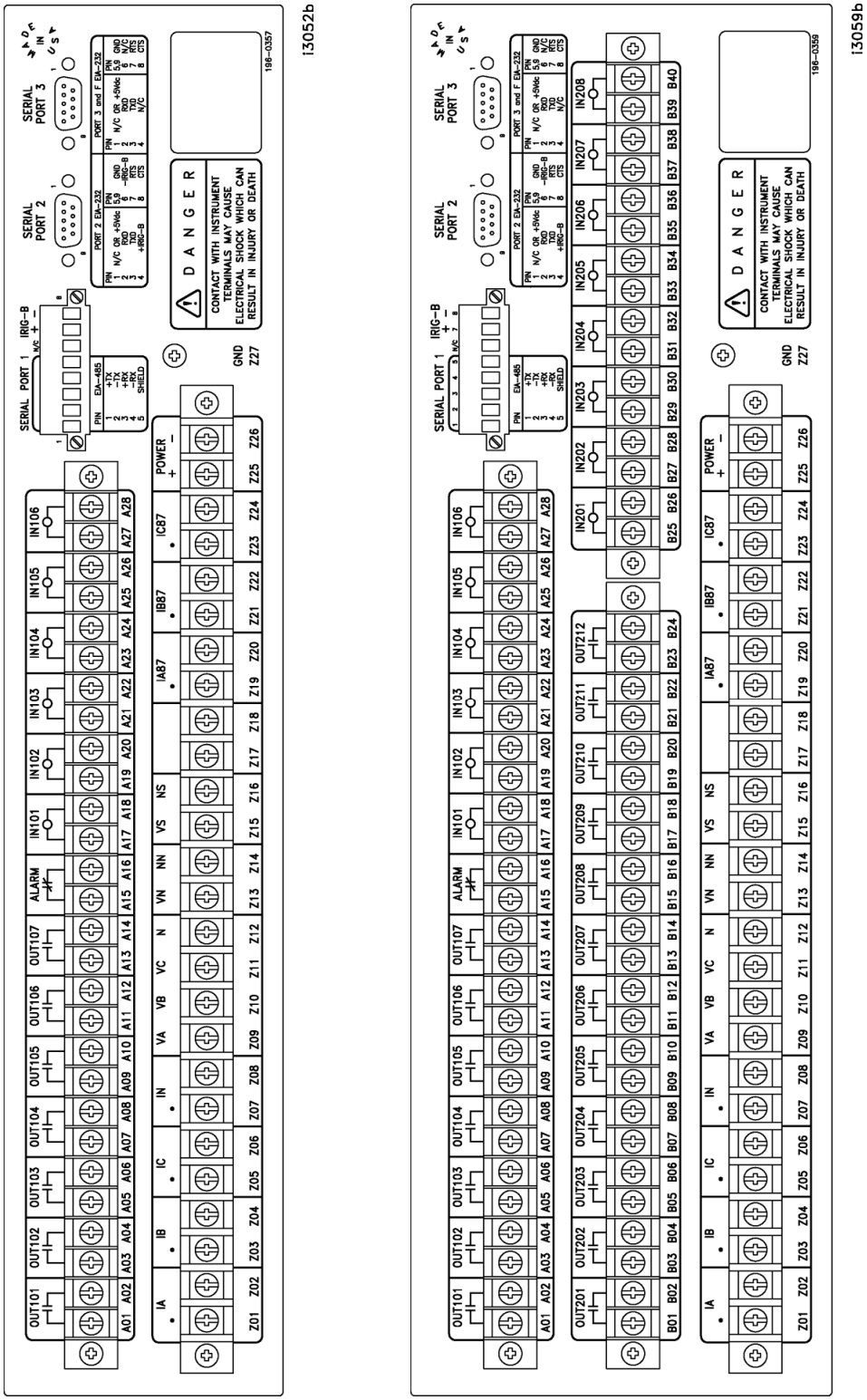

Figure 5.7: SEL-300G3 Relay Rear-Panel Drawings for Rack- and Panel-Mount Relays (2U and 3U), Screw-Terminal Block Version

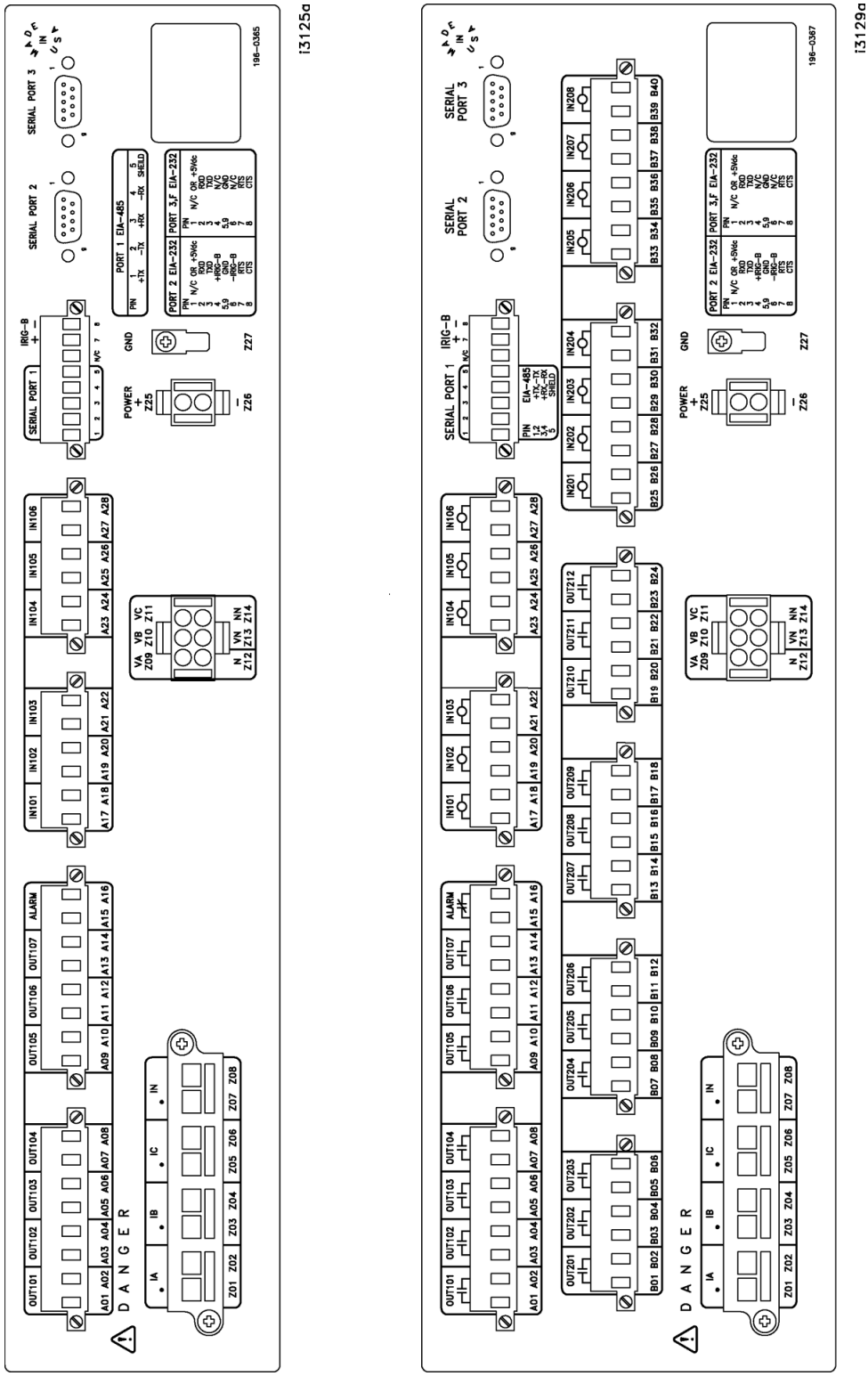

Figure 5.8: SEL-300G0 Relay Rear-Panel Drawings for Rack- and Panel-Mount Relays (2U and 3U), Connectorized Version

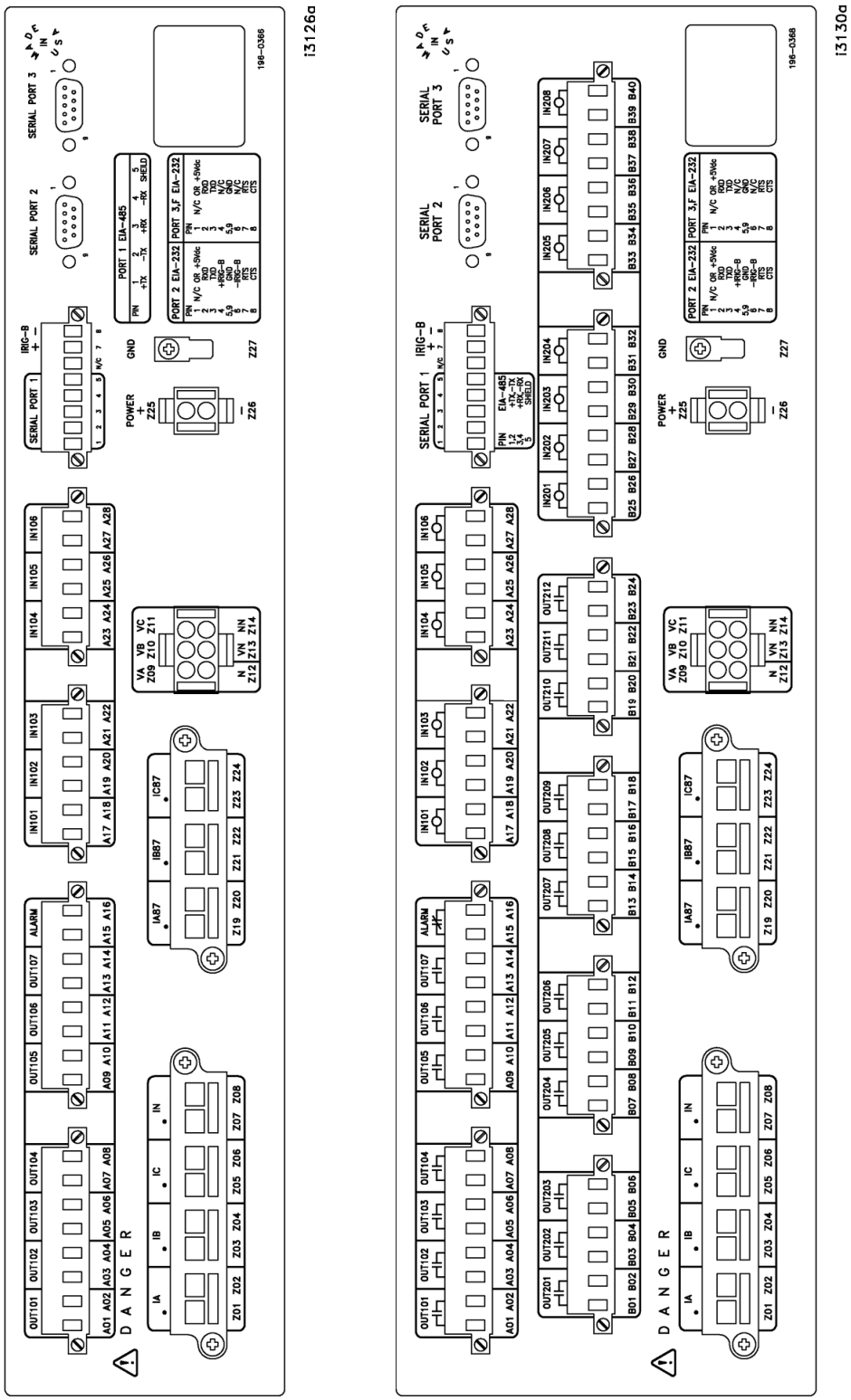

Figure 5.9: SEL-300G1 Relay Rear-Panel Drawings for Rack- and Panel-Mount Relays (2U and 3U), Connectorized Version

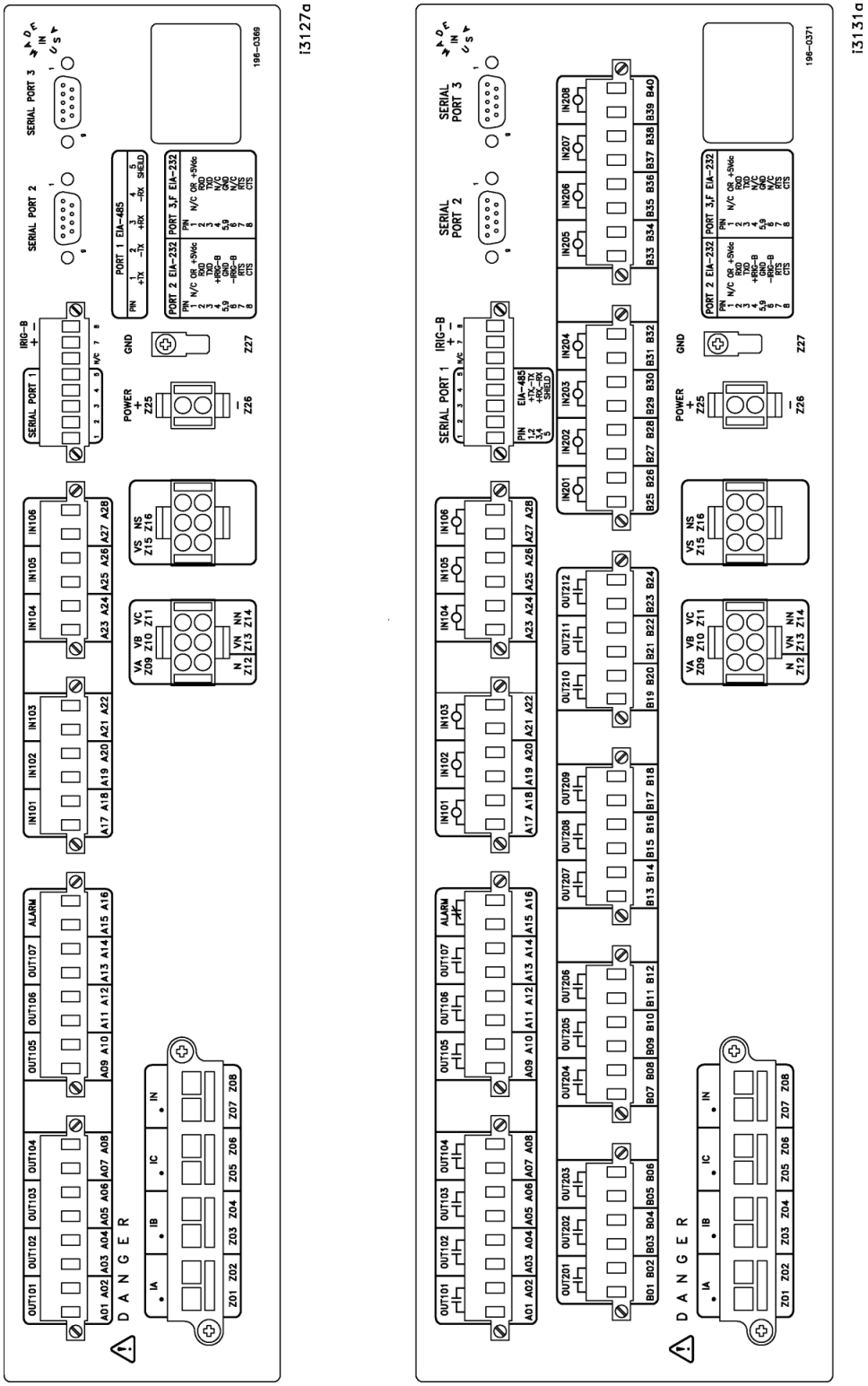

Figure 5.10: SEL-300G2 Relay Rear-Panel Drawings for Rack- and Panel-Mount Relays (2U and 3U), Connectorized Version

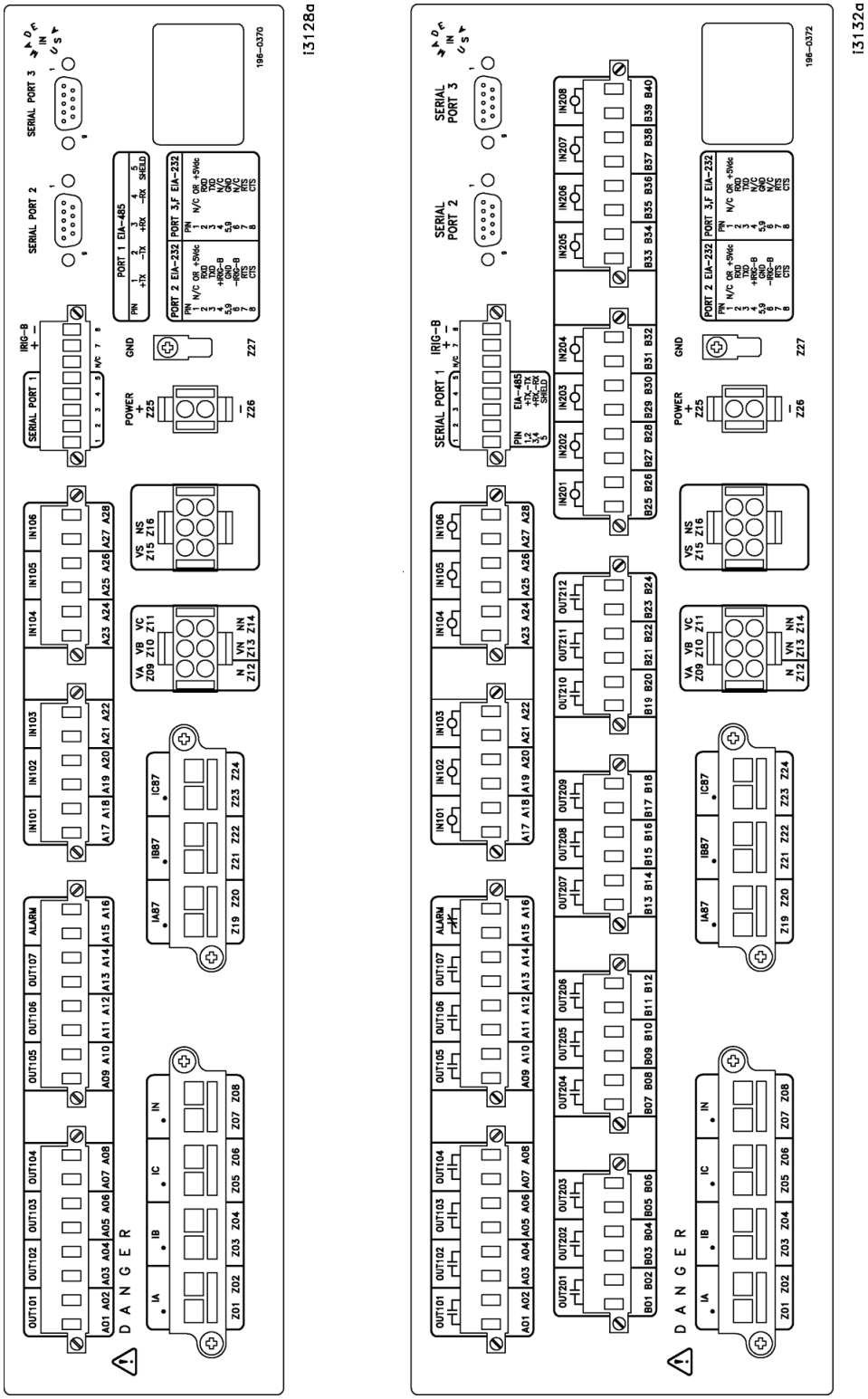

Figure 5.11: SEL-300G3 Relay Rear-Panel Drawings for Rack- and Panel-Mount Relays (2U and 3U), Connectorized Version

MAKING REAR-PANEL CONNECTIONS

Refer to Figure 5.14 through Figure 5.24 for wiring examples of typical applications.

Guard against accidental contact with rear terminals by using approved enclosures or any of the following methods:

- Location in a room, vault, or similar enclosure that is accessible only to qualified persons.
- Suitable permanent, substantial partitions or screens which are arranged so only qualified persons will have access to the space within reach of the live parts. Any openings in partitions or screens shall be located and sized so persons are not likely to come in accidental contact with the live parts or bring conducting objects into contact with them.
- Location on a suitable balcony, gallery, or platform so elevated and arranged as to exclude unqualified persons.
- Elevation of 8 ft (2.44 m) or more above the floor or other working surface.

Required Equipment and General Connect Information

Models 0300G_W and 0300G_Y (Connectorized)

Tools: small slotted tip screwdriver, wire strippers

Parts: SEL-WA0300G_W or SEL-WA0300G_Y Wiring Harness

Wiring Harness

The SEL-WA0300G_W and SEL-WA0300G_Y Wiring Harnesses include all connectors necessary for relay installation. All connectors requiring special termination come prewired from the factory. Refer to the SEL-WA0300G_W, SEL-WA0300G_Y Model Option Table, which is available from the factory.

The SEL-WA0300G_W Wiring Harness includes the following connectors (not prewired):

- (2) 8-position female plug-in connectors for output contacts OUT101 through ALARM.
- (2) 6-position female plug-in connectors for optoisolated inputs IN101 through IN106.
- (1) 8-position female plug-in connector for EIA-485/IRIG-B Serial Port 1.

The SEL-WA0300G_Y Wiring Harness includes the following connectors (not prewired):

- (2) 8-position female plug-in connectors for output contacts OUT101 through ALARM.
- (2) 6-position female plug-in connectors for optoisolated inputs IN101 through IN106.
- (1) 8-position female plug-in connector for EIA-485/IRIG-B Serial Port 1.
- (4) 6-position female plug-in connectors for output contacts OUT201 through OUT212
- (2) 8-position female plug-in connectors for optoisolated inputs IN201 through IN208.

These connectors accept wire size AWG 24 to 12. Strip the wires 0.31 inches (8 mm) and install with a small slotted-tip screwdriver. Secure each connector to the relay chassis with the screws located on either end of the connector. The connectors are coded at the factory to prevent swapping connectors during installation. Refer to Figure 5.12 for the standard input/output connector coding.

Both wiring harnesses include the following prewired connectors for all Connectorized SEL-300Gs:

- (1) CT shorting connector for current inputs IA, IB, IC, and IN.
- (1) connector for voltage inputs VA, VB, VC, and VN.
- (1) connector for POWER inputs (+ and -).
- (1) spade connector for GROUND connection (chassis ground).

In addition, the wiring harness package also contains the following prewired connectors for specific models:

- (1) CT shorting connector for current inputs IA87, IB87, and IC87 (SEL-0300G1 and SEL-0300G3).
- (1) connector for voltage input VS (SEL-0300G2 and SEL-0300G3).

These prewired connectors (and the serial port connector) are unique and may only be installed in one orientation.

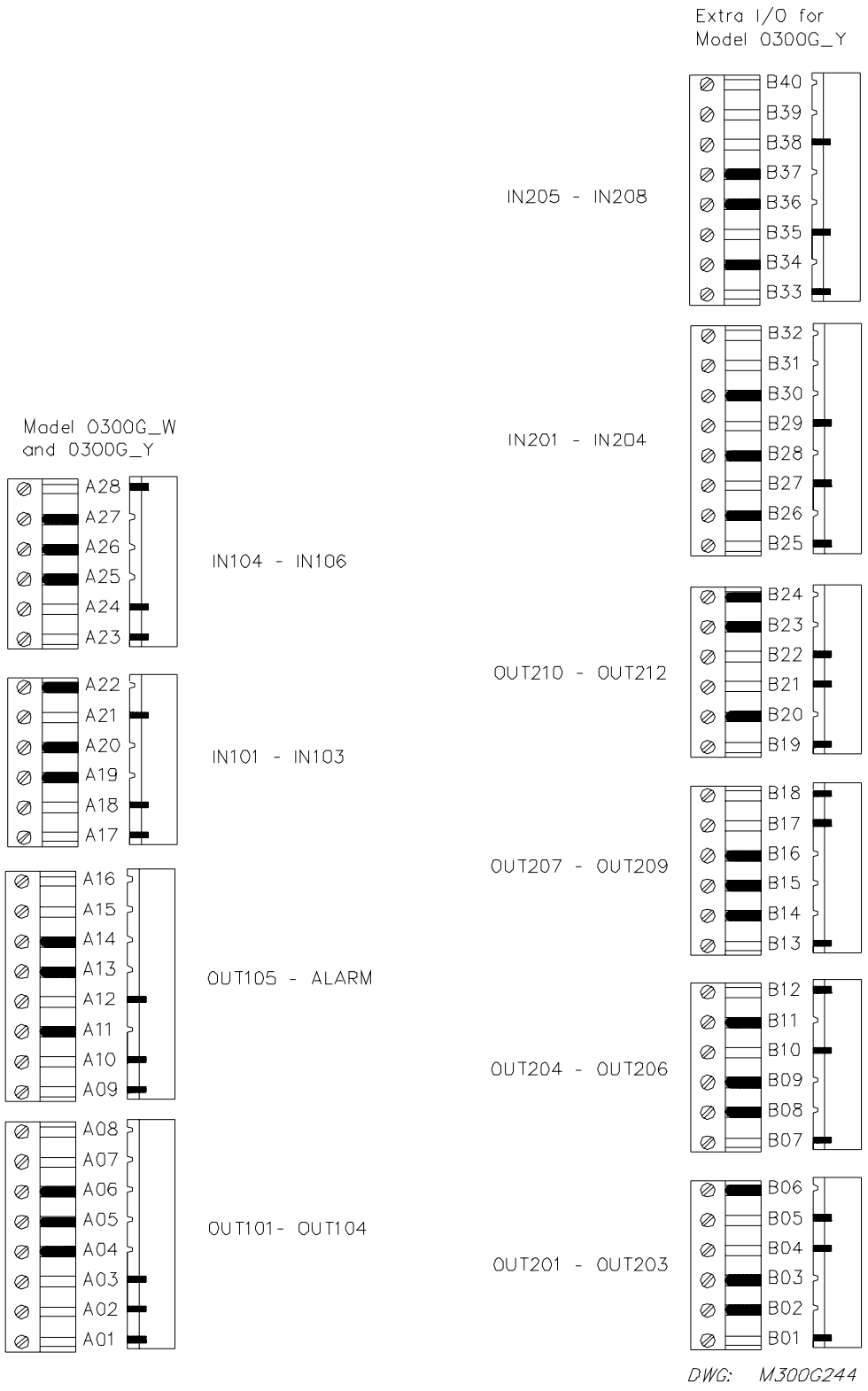

Figure 5.12: SEL-300G Relay Connectorized Coding (Top View; Models 0300G_W and 0300G_Y)

Models 0300G_0 and 000G_1 (screw-terminal blocks)

Tools: Phillips or slotted-tip screwdriver.

Parts: All screws are size #6-32. Locking screws can be requested from the factory.

Chassis Ground

Models 0300G_W and 000G_Y

Ground the relay chassis at terminal Z27 with the spade connector provided in the previously discussed wiring harness (tab size 0.250 inches x 0.032 inches). If the tab on the chassis is removed, the chassis ground connection can be made with the size #6-32 screw.

Models 0300G_0 and 0300G_1

Ground the relay chassis at terminal Z27.

Power Supply

Models 0300G_W and 0300G_Y

The power supply wiring harness includes a 2-position connector and factory-installed wire. Note the polarity indicators on terminals Z25 (+) and Z26 (-). Control power passes through these terminals to a fuse and to the switching power supply. The control power circuitry is isolated from the relay chassis ground.

Plug the power supply connector into terminals Z25 and Z26. The connector locks in place upon insertion.

Refer to ***Section 1: Introduction and Specifications*** for power supply ratings. The relay power supply rating is listed on the serial number sticker on the relay rear panel.

Models 0300G_0 and 000G_1

Connect control voltage to the POWER terminals. Note the polarity indicators on terminals Z25 (+) and Z26 (-). Control power passes through these terminals to a fuse and to the switching power supply. The control power circuitry is isolated from the relay chassis ground.

Refer to ***Section 1: Introduction and Specifications*** for power supply ratings. The relay power supply rating is listed on the serial number sticker on the relay rear panel.

Output Contacts

Models 0300G_0H, 0300G_03, 0300G_WH, and 0300G_W3

Models 0300G_0H, 0300G_03, 0300G_WH, and 0300G_W3 can be ordered with standard output contacts only. Refer to ***General Specifications*** in ***Section 1: Introduction and Specifications*** for output contact ratings.

Standard output contacts are not polarity dependent.

Models 0300G_1H, 0300G_13, 0300G_YH, and 0300G_Y3

Models 0300G_1H, 0300G_13, 0300G_YH, and 0300G_Y3 have output contacts on the:

main board	OUT101 through ALARM (ordered as standard output contacts only)
extra I/O board	OUT201 through OUT212 [ordered as standard or high current interrupting output contacts (all of one type or the other)]

Refer to ***General Specifications*** in ***Section 1: Introduction and Specifications*** for output contact ratings. To determine the type of output contacts on the extra I/O board of your Model 0300G_1 and 0300G_Y relays, refer to the part number on the serial number sticker on the relay rear panel.

Standard Output Contacts

Model 0300G_1 or 0300G_Y part numbers with a numeral "2" in bold below (sample part number) indicate standard output contacts on the extra I/O board (OUT201 through OUT212):

0 3 0 0 G _ Y _ _ _ _ **2** X _ X (Connectorized models)

0 3 0 0 G _ 1 _ _ _ _ **2** X _ X (screw-terminal block models)

Standard Output contacts are not polarity dependent.

High Current Interrupting Output Contacts

Model 0300G_1 part numbers with a numeral "6" in bold below (sample part number) indicate high current interrupting output contacts on the extra I/O board (OUT201 through OUT212):

0 3 0 0 G _ Y _ _ _ _ **6** X _ X (Connectorized models)

0 3 0 0 G _ 1 _ _ _ _ **6** X _ X (screw-terminal block models)

High current interrupting output contacts are polarity dependent. When high current interrupting output contacts are ordered, the positive polarity terminal is indicated with a "+" polarity marking above even-numbered terminals B02, B04, B06, . . ., B24. The extra I/O board of the relays shown in Figure 5.4 through Figure 5.11 do not show these "+" polarity markings because these drawings show the rear panel for an extra I/O board with standard output contacts.

As an example, consider the connection of terminals B01 and B02 (high current interrupting output contact OUT201) in a circuit:

Terminal B02 (+) has to be at a higher voltage potential than terminal B01 in the circuit.

The same holds true for output contacts OUT202 through OUT212 (if they are also high current interrupting output contacts).

Note: Do not use the high current interrupting output contacts to switch ac control signals.

Optoisolated Inputs

The optoisolated inputs in any of the SEL-300G models (e.g., IN102, IN207) are not polarity dependent. With nominal control voltage applied, each optoisolated input draws approximately 5 mA of current. Refer to ***General Specifications*** in ***Section 1: Introduction and Specifications*** for optoisolated input ratings.

Refer to the serial number sticker on the relay rear panel for the optoisolated input voltage rating (listed under label: LOGIC INPUT).

Current Transformer Inputs (screw-terminal block models)

Models 0300G0, 0300G1, 0300G2, and 0300G3

Note the polarity dots above terminals Z01, Z03, Z05, and Z07. Refer to Figure 5.14 through Figure 5.24 for typical CT wiring examples.

Refer to the serial number sticker on the relay rear panel for the nominal current ratings (5 A or 1 A) for the phase (IA, IB, IC) and neutral (IN) current inputs (listed under label: AMPS AC).

Models 0300G1 and 0300G3

Note the polarity dots above terminals Z19, Z21, and Z23. Refer to Figure 5.14, Figure 5.16, Figure 5.19, Figure 5.20, Figure 5.22, and Figure 5.24 for typical CT wiring examples.

Refer to the serial number sticker on the relay rear panel for the nominal current ratings (5 A or 1 A) for the phase (IA87, IB87, IC87) and current inputs (listed under label: AMPS AC).

Current Transformer Inputs (Connectorized models)

Models 0300G0, 0300G1, 0300G2, and 0300G3

Note the polarity dots above terminals Z01, Z03, Z05, and Z07. Refer to Figure 5.14 through Figure 5.24 for typical CT wiring examples.

Refer to the serial number sticker on the relay rear panel for the nominal current ratings (5 A or 1 A) for the phase (IA, IB, IC) and neutral (IN) current inputs (listed under label: AMPS AC).

The wiring harness includes a prewired 8-position CT shorting connector.

Plug the CT shorting connector into terminals Z01 through Z08. Secure the connector to the relay chassis with the two screws located on either end of the connector. When removing the CT shorting connector, pull it straight out away from the rear panel. With the CT shorting connector removed from the rear panel, internal mechanisms in the connector separately short out each individual power system current transformer.

The connector accepts wire size AWG 16 to 10. A special tool is used to attach the wire to the connector at the factory.

Models 0300G1 and 0300G3

Note the polarity dots above terminals Z19, Z21, and Z23. Refer to Figure 5.14, Figure 5.16, Figure 5.19, Figure 5.20, Figure 5.22, and Figure 5.24 for typical CT wiring examples.

Refer to the serial number sticker on the relay rear panel for the nominal current ratings (5 A or 1 A) for the phase (IA87, IB87, IC87) and current inputs (listed under label: AMPS AC).

The wiring harness includes a prewired 6-position CT shorting connector.

Plug the CT shorting connector into terminals Z19 through Z24. Secure the connector to the relay chassis with the two screws located on either end of the connector. When removing the CT shorting connector, pull it straight out away from the rear panel. With the CT shorting connector removed from the rear panel, internal mechanisms in the connector separately short out each individual power system current transformer.

The connectors accept wire size AWG 16 to 10. A special tool is used to attach the wire to the connector at the factory.

Potential Transformer Inputs

Any of the phase voltage inputs can be connected to voltages up to 200 V continuous. The neutral voltage input VN – NN can be connected to voltages up to 300 V continuous. The synch voltage input VS – NS can be connected to voltages up to 200 V continuous. Figure 5.14 through Figure 5.24 show examples of typical voltage connections. Generator frequency is determined from the voltage connected to terminals VA – N. System frequency (for the optional synch-check element) is determined from the voltage connected to the terminals VS – NS.

Serial Communications Ports

Refer to Table 10.1 for information on the serial ports available on the different SEL-300G models.

Serial Port 1 on all the SEL-300G models is an EIA-485 port (4-wire). The Serial Port 1 Connectorized connector accepts wire size AWG 24 to 12. Strip the wires 0.31 inches (8 mm) and install with a small slotted-tip screwdriver. Serial Port 1 connector has extra positions for IRIG-B time-code signal input (see Table 10.3; see following discussion on IRIG-B time-code input). Also, Serial Port 1 can be configured as shown in Figure 5.13 for two-wire, EIA-485 Modbus communications.

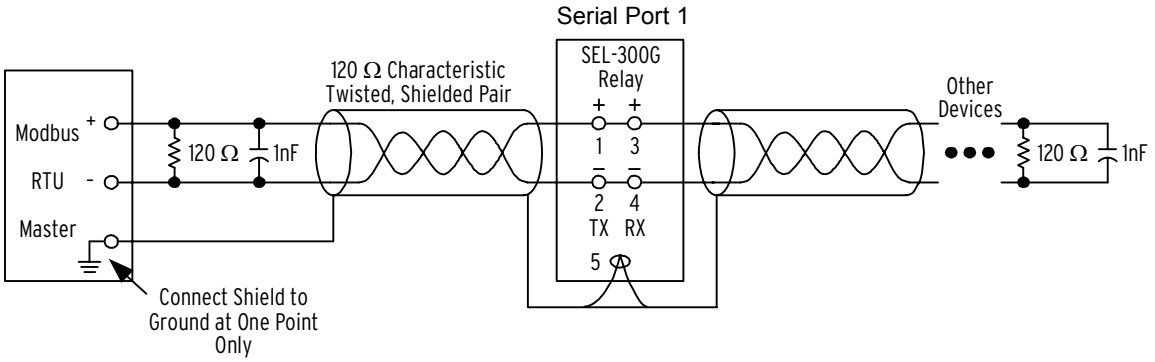

Figure 5.13 Rear-Panel EIA-485 Serial Port #1 Connections (2-wire Modbus Example)

All EIA-232 ports accept 9-pin D-subminiature male connectors. Port 2 on all the SEL-300G models includes the IRIG-B time-code signal input (see Table 10.2; see following discussion on IRIG-B time-code input).

The pin definitions for all the ports are given on the relay rear panel and detailed in Table 10.2 through Table 10.4 in ***Section 10: Serial Port Communications and Commands***.

Refer to for a list of cables available from SEL for various communication applications. Refer to ***Section 10: Serial Port Communications and Commands*** for detailed cable diagrams for selected cables (cable diagrams precede Table 10.4).

Note: Listing of devices not manufactured by SEL in Table 5.1 is for the convenience of our customers. SEL does not specifically endorse or recommend such products, nor does SEL guarantee proper operation of those products or the correctness of connections over which SEL has no control.

For example, to connect any EIA-232 port to the 9-pin male connector on a laptop computer, order cable number C234A and specify the length needed (standard length is 8 feet). To connect the SEL-300G Port 2 to the SEL-2020 or SEL-2030 Communications Processor that supplies the communication link and the IRIG-B time synchronization signal, order cable number C273A. For connecting devices at distances over 100 feet, SEL offers fiber-optic transceivers. The SEL-2800 family of transceivers provides fiber-optic links between devices for electrical isolation and long distance signal transmission. Contact SEL for further information on these products.

Table 5.1: Communication Cables to Connect the SEL-300G Relay to Other Devices

SEL-300G EIA-232 Serial Ports	Connect to Device (gender refers to the device)	SEL Cable #
all EIA-232 ports	PC, 25-Pin Male (DTE[b])	C227A
all EIA-232 ports	Laptop PC, 9-Pin Male (DTE[b])	C234A
all EIA-232 ports	SEL Communications Processors without IRIG-B	C272A
2	SEL Communications Processors with IRIG-B	C273A
all EIA-232 ports	SEL-PRTU	C231
2	SEL-IDM, Ports 2 through 11	C254 + C257
2[a] 3[a]	StarComm Modem, 5 Vdc Powered	C220
all EIA-232 ports	Standard Modem, 25-Pin Female (DCE[c])	C222

SEL-300G EIA-232 Serial Ports	Connect to Device (gender refers to the device)	SEL Cable #
all EIA-232 ports	RFL-9660	C245A
All EIA-232 ports (with SEL-2800 transceiver)	SEL-2600 Series RTD Module	C805Z010VVX0003 (3 meters)[d]
All EIA-232 ports (with SEL-2812MR transceiver)	SEL-2664 Field Ground Module	SEL C805 Multimode 200 µm core diameter fiber-optic cable with ST connectors, or SEL C807 Multimode 62.5 µm core diameter fiber-optic cable with ST connectors

[a] A corresponding main board jumper must be installed to power the StarComm Modem with +5 Vdc (0.5 A limit) from the SEL-300G. See Figure 5.26 and Table 5.7.

[b] Data Terminal Equipment

[c] Data Communication Equipment

[d] Refer to Model Option Table for additional cable choices.

IRIG-B Time-Code Input

The SEL-300G accepts a demodulated IRIG-B time signal to synchronize the relay internal clock with some external source. For example, the demodulated IRIG-B time signal can come from the SEL-2020 Communications Processor or the SEL-IDM listed in Table 5.1. A demodulated IRIG-B time code can be input into Serial Port 2 on any of the SEL-300G models. This is handled adeptly by connecting Serial Port 2 of the SEL-300G to an SEL-2020 with Cable C273A. Port 2 also can be connected to the SEL-IDM with Cable 254 plus Cable 257.

A demodulated IRIG-B time code can be input into the connector for Serial Port 1 (see Table 10.3). If demodulated IRIG-B time code is input into this connector, it should not be input into Serial Port 2 and vice versa.

EXAMPLE AC AND DC CONNECTION DIAGRAMS

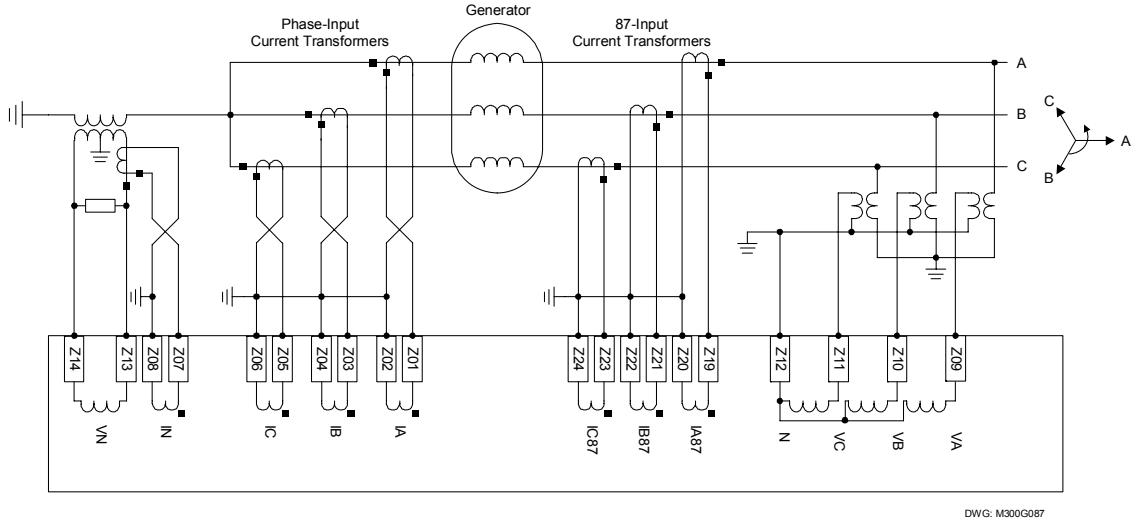

Figure 5.14: SEL-300G1 Relay AC Connection Example—High-Impedance Grounded Generator With Current Differential Protection

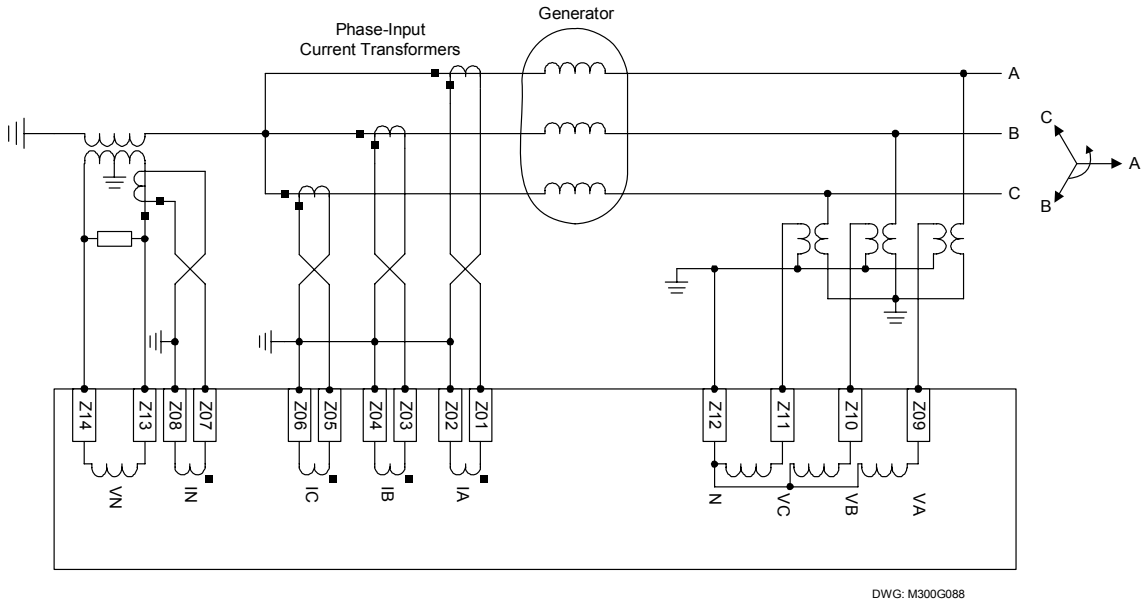

Figure 5.15: SEL-300G0 Relay AC Connection Example—High-Impedance Grounded Generator Without Current Differential Protection

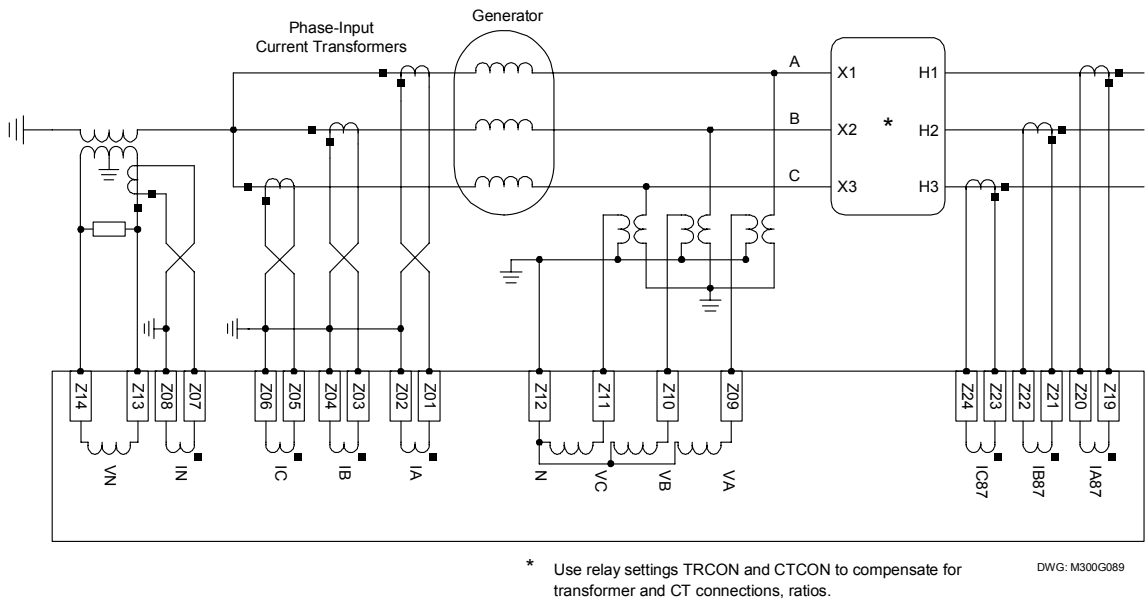

Figure 5.16: SEL-300G1 Relay AC Connection Example—High-Impedance Grounded Generator With Step-Up Transformer Included in Differential Zone

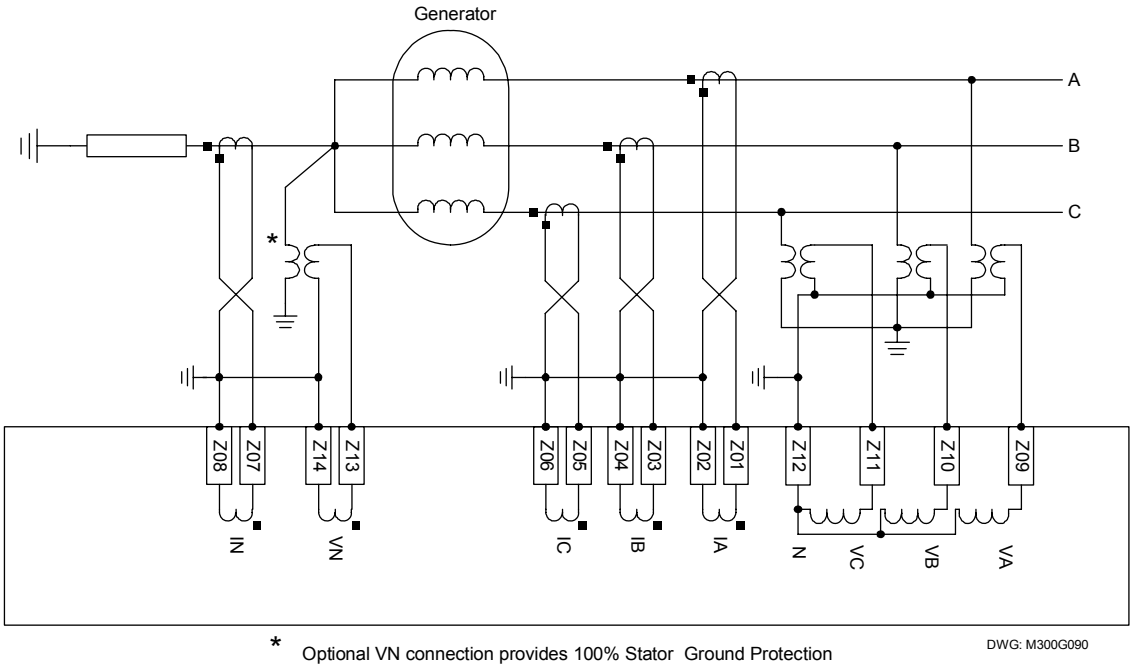

Figure 5.17: SEL-300G0 Relay AC Connection Example—Resistance Grounded Generator With Ground Differential Protection (87N)

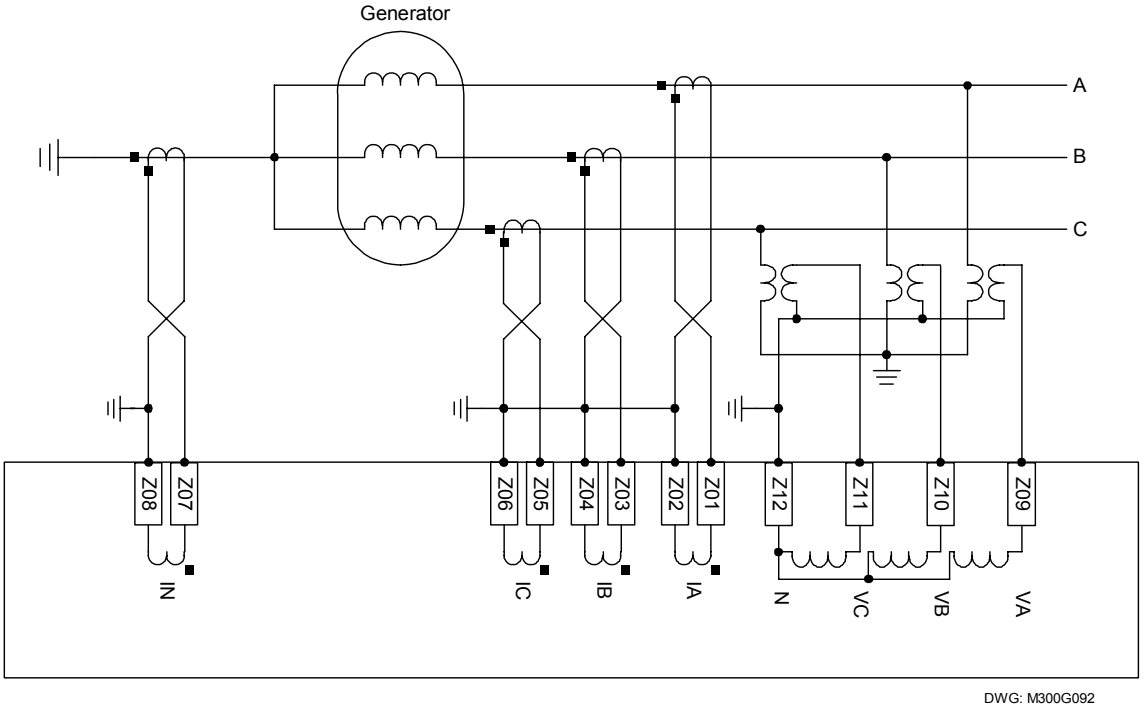

Figure 5.18: SEL-300G0 Relay AC Connection Example—Solidly Grounded Generator With Ground Differential Protection (87N)

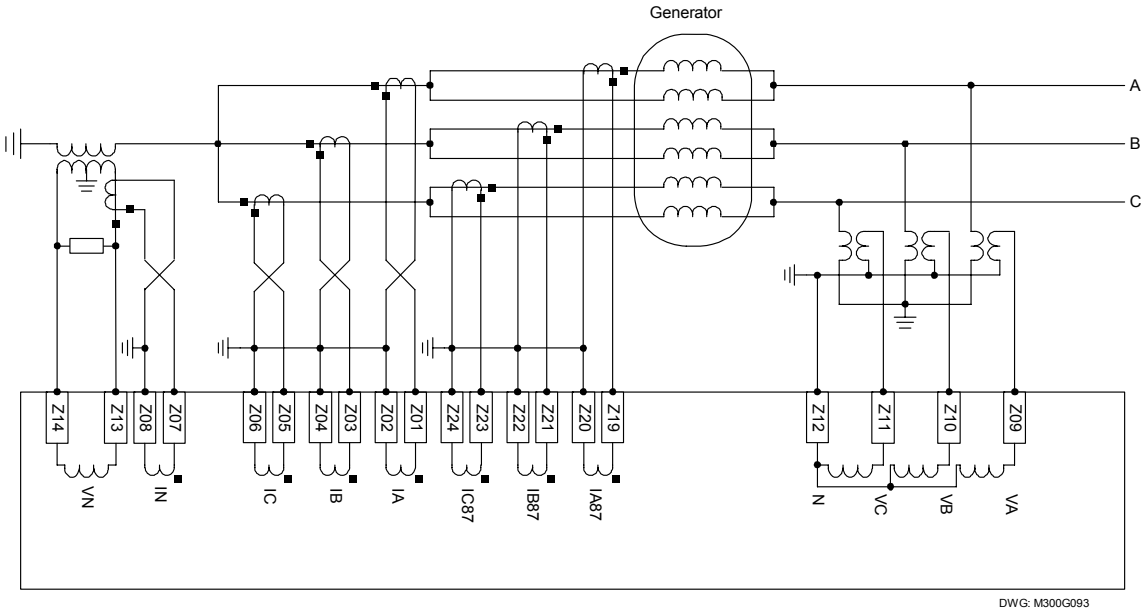

Figure 5.19: SEL-300G1 Relay AC Connection Example—High-Impedance Grounded Generator With Split-Phase Current Differential Protection

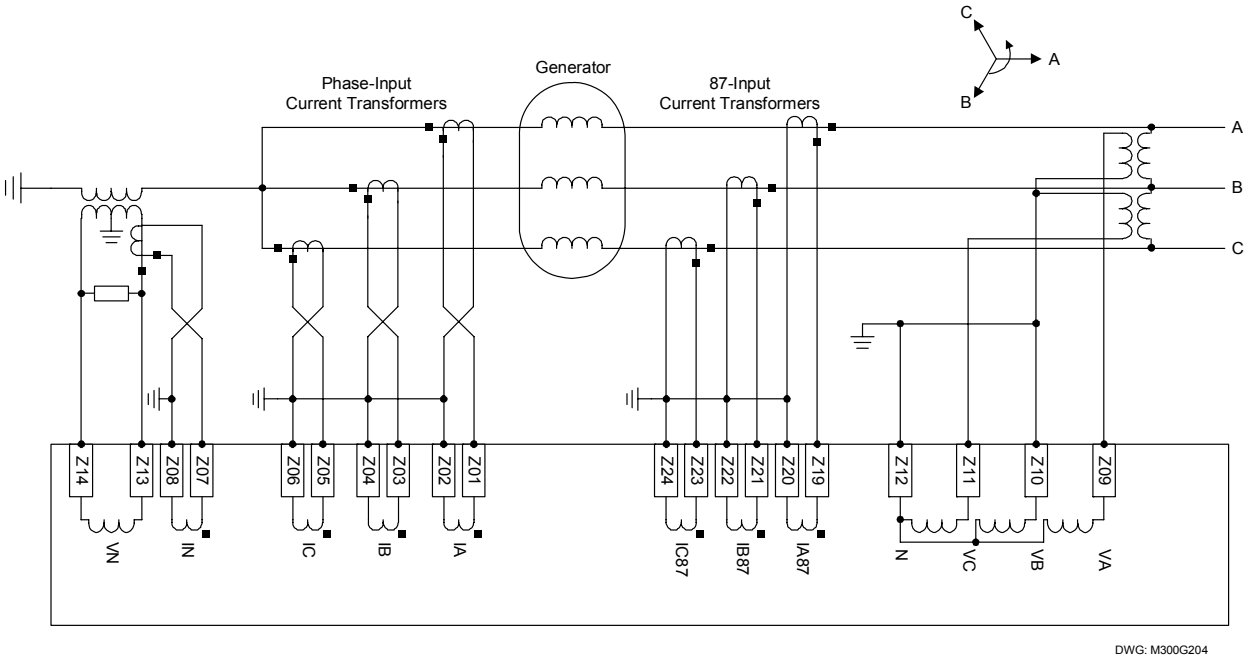

Figure 5.20: SEL-300G1 Relay Applied Using Open-Delta Potentials

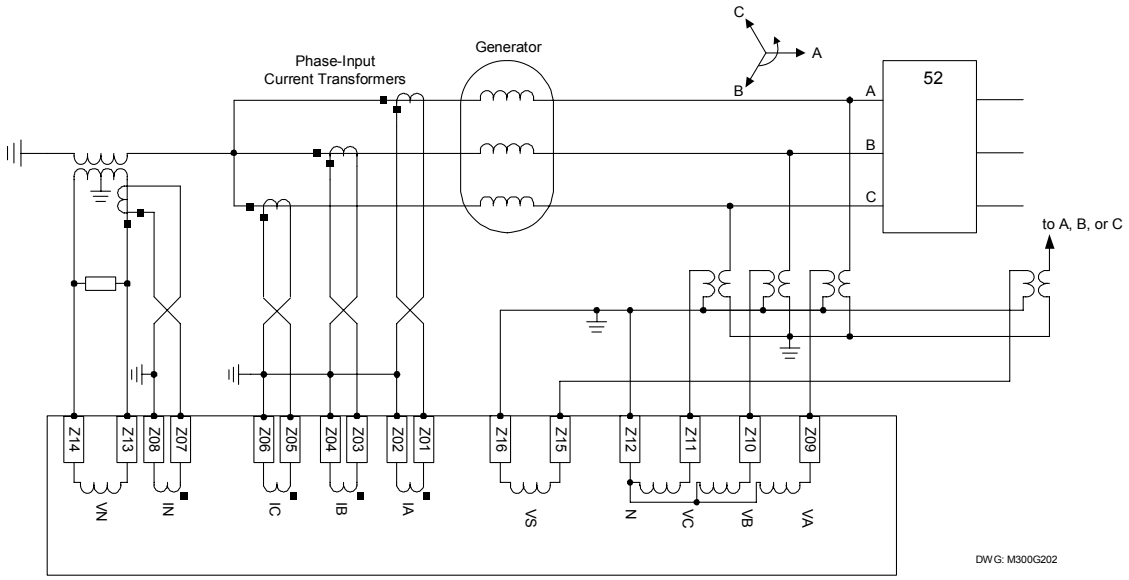

Figure 5.21: SEL-300G2 Relay High-Impedance Grounded Generator With Synch-Check and Without Current Differential Protection

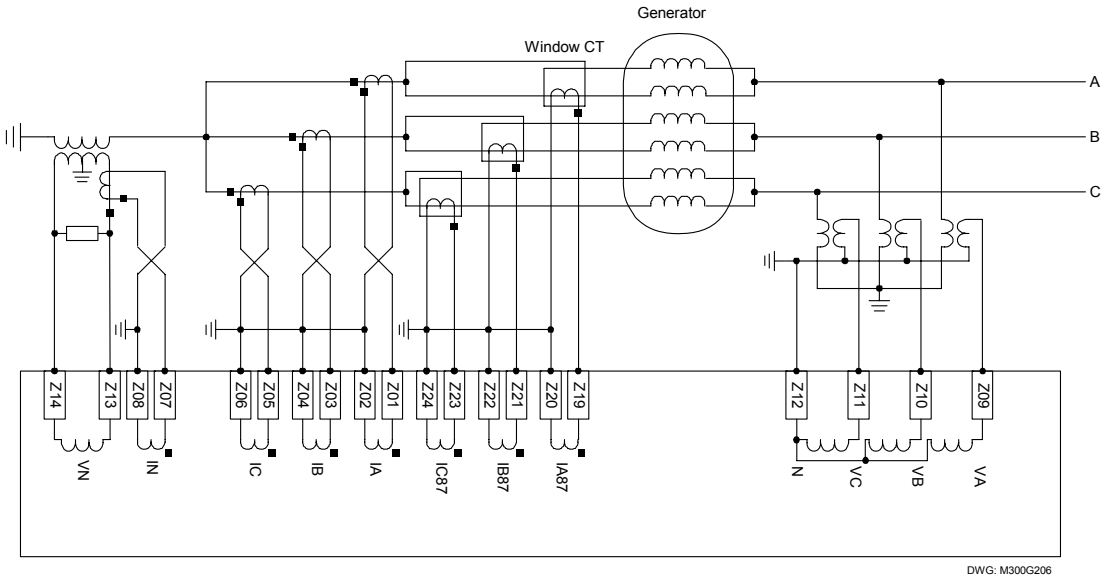

Figure 5.22: SEL-300G1 Relay High-Impedance Grounded Generator With Split-Phase, Self-Balancing Differential Protection

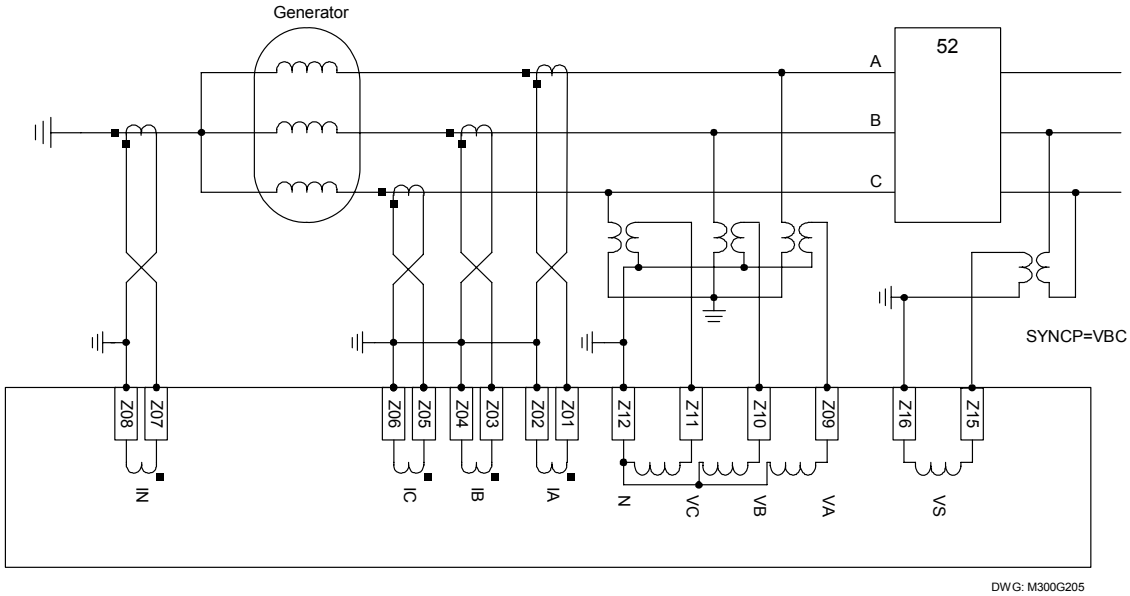

Figure 5.23: SEL-300G2 Relay Solidly Grounded Generator With Ground Differential (87N) and Synch-Check

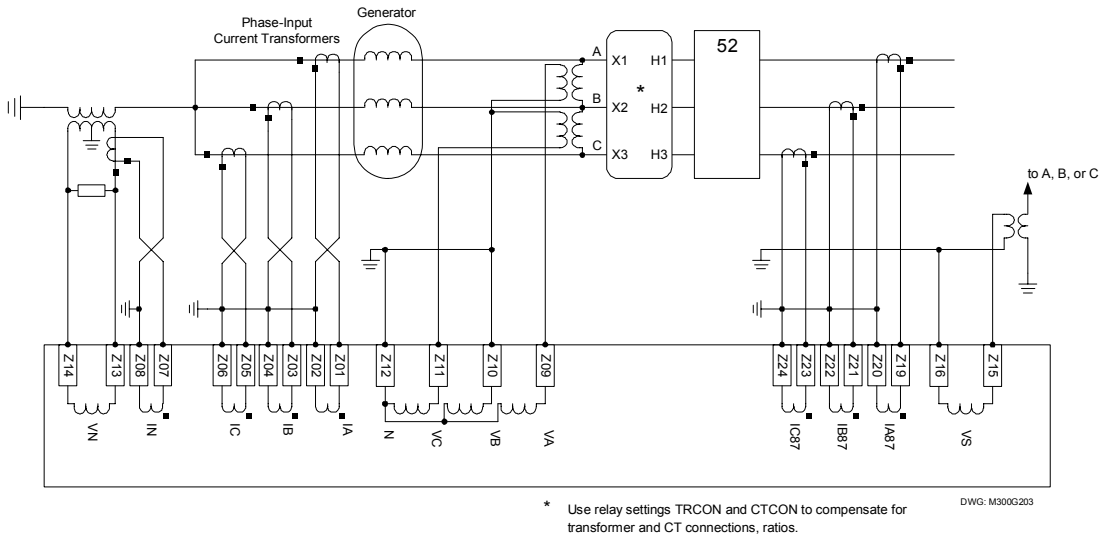

Figure 5.24: SEL-300G3 Relay AC Connection Example—High-Impedance Grounded Generator With Open-Delta PTs, Step-Up Transformer Included in Differential Zone, and Synch-Check

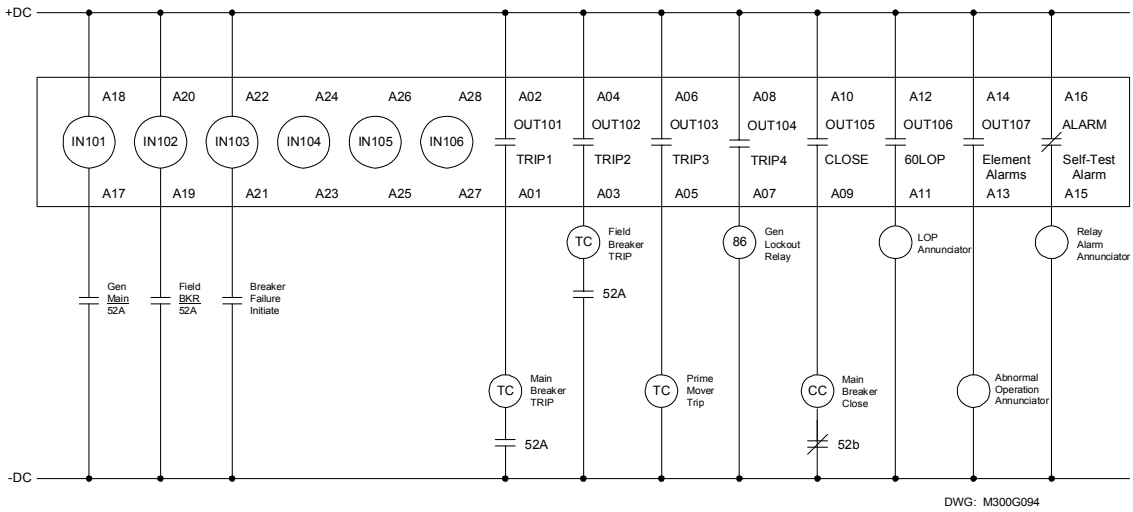

Figure 5.25: SEL-300G Relay DC Connection Example

CIRCUIT BOARD JUMPERS AND BATTERY

Accessing the Relay Main Board (All Models) and Extra I/O Board (Models 0300G_1 and 0300G_Y)

To change circuit board jumpers or replace the clock battery on the relay main board (or change output contact jumpers on the extra I/O board), refer to Figure 5.26, Figure 5.27, and Figure 5.28 and take the following steps:

1. De-energize the relay. On Connectorized versions this can be accomplished easily by removing the connector at rear-panel terminals Z25 and Z26.

2. Remove any cables connected to serial ports on the front and rear panels.

3. Loosen the six front-panel screws (they remain attached to the front panel), and remove the relay front panel.

CAUTION

The relay contains devices sensitive to electrostatic discharge (ESD). When working on the relay with front or top cover removed, work surfaces and personnel must be properly grounded or equipment damage may result.

4. Identify which drawout board needs to be changed. All SEL-300G models have a main board in the top guides, and Models 0300G_1 and 0300G_Y have an extra I/O board below the main board. Each board corresponds to a row of rear-panel screw-terminal blocks.

5. On Connectorized versions, remove the rear-panel connectors that correspond to the circuit board you wish to remove by loosening the screws on either end of each connector. Removal of the extra I/O board also requires removal of the main board (because the LCD on the main board is in the way).

6. On screw-terminal block models, disconnect the ribbon cables from the board(s). Grasp the drawout assembly of the board, and pull the assembly from the relay chassis. In Models 0300G_1 and 0300G_Y, the extra I/O board directly below the main board requires removal of the main board first (because the LCD on the main board is in the way).

7. Locate the jumper(s) or battery to be changed (refer to Figure 5.26, Figure 5.27, and Figure 5.28). Change the jumper position(s). Note that the output contact jumpers are soldered in place.

8. Slide the drawout assemblies into the relay chassis (main board last). Reconnect the ribbon cables. Replace the relay front panel and reenergize the relay. On Connectorized versions, replace the power connector at rear-panel terminals Z25 and Z26.

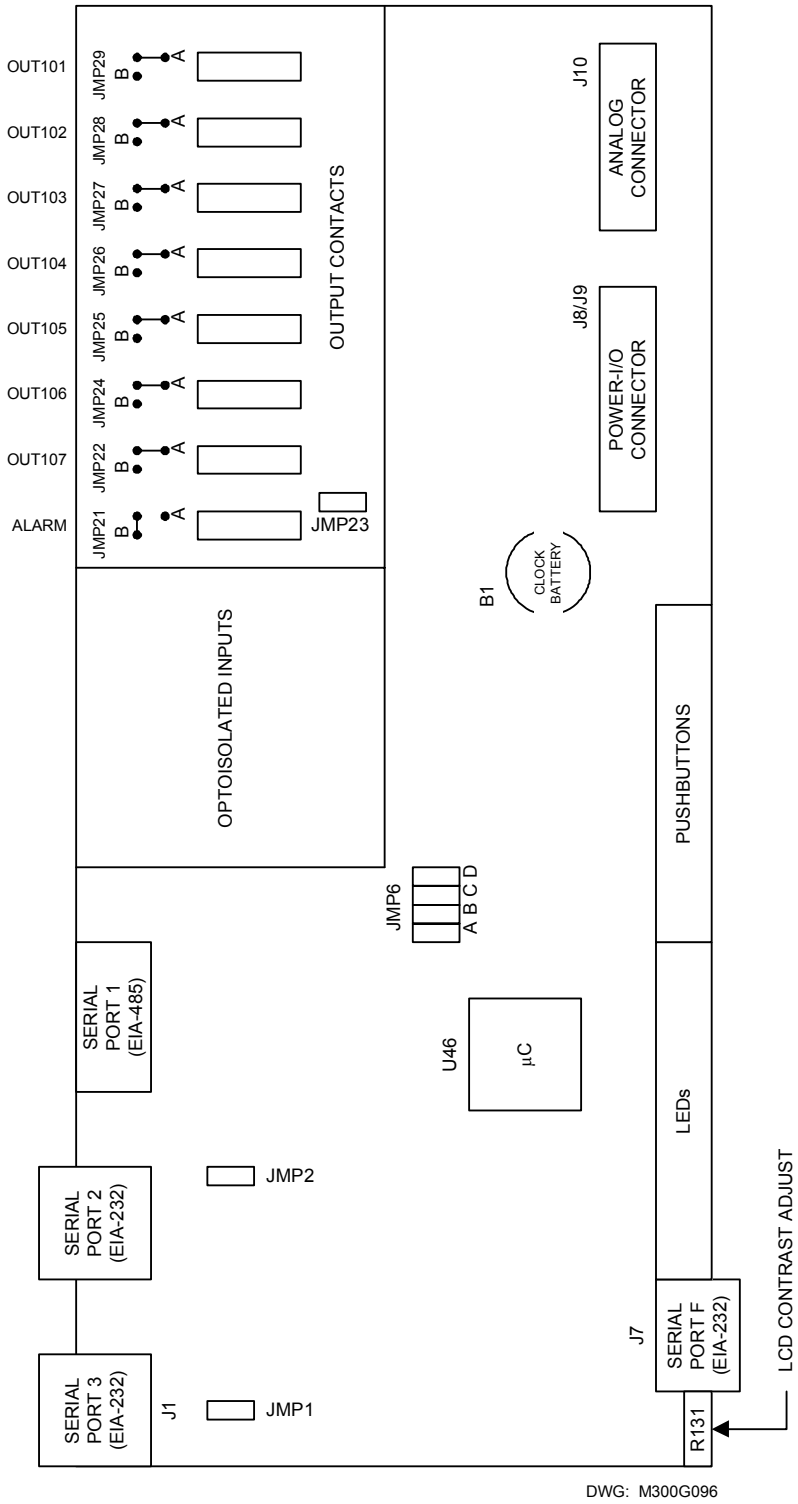

Figure 5.26: Jumper, Connector, and Major Component Locations on the SEL-300G Relay Main Board (All Models)

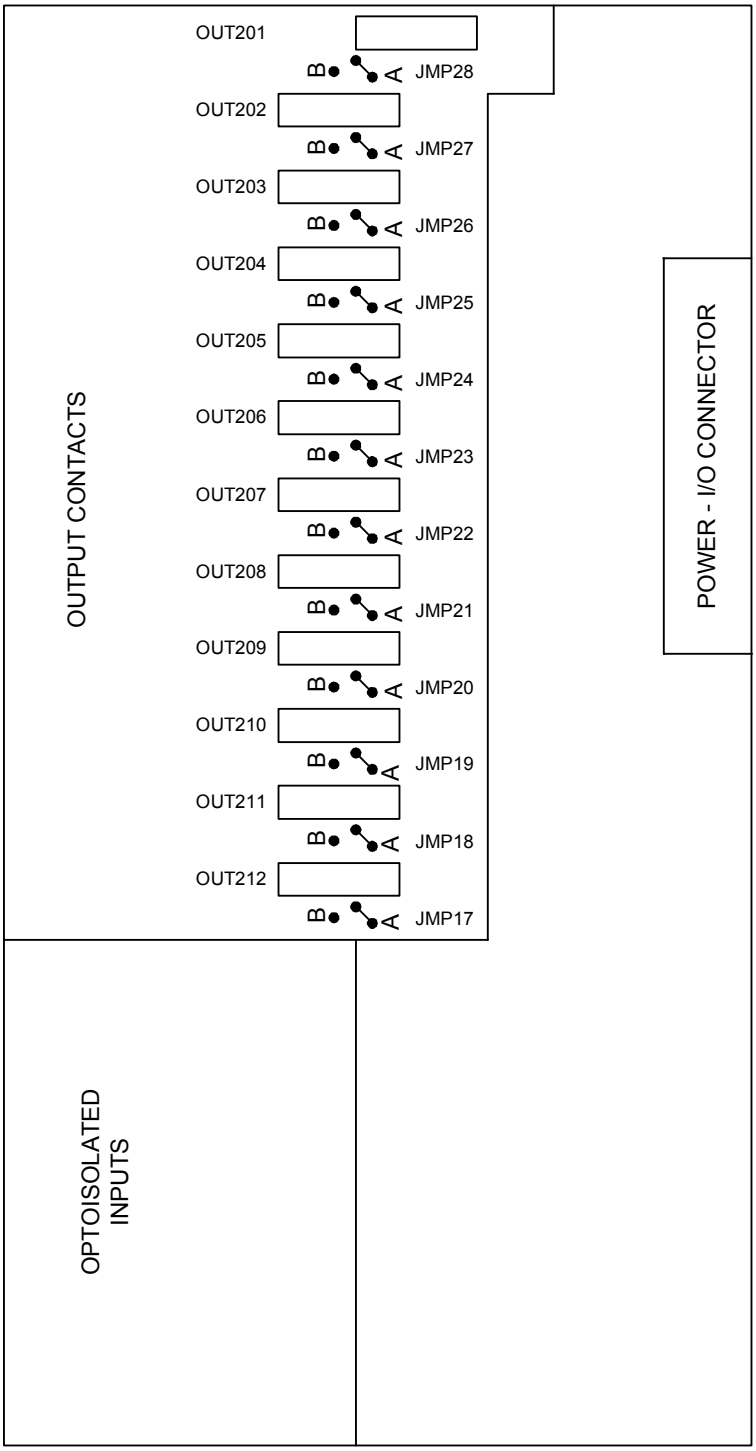

DWG: M300G095

Figure 5.27: Jumper, Connector, and Major Component Locations on the SEL-300G Relay Extra I/O Board (Model 0300G_1, Screw Terminal Block Version)

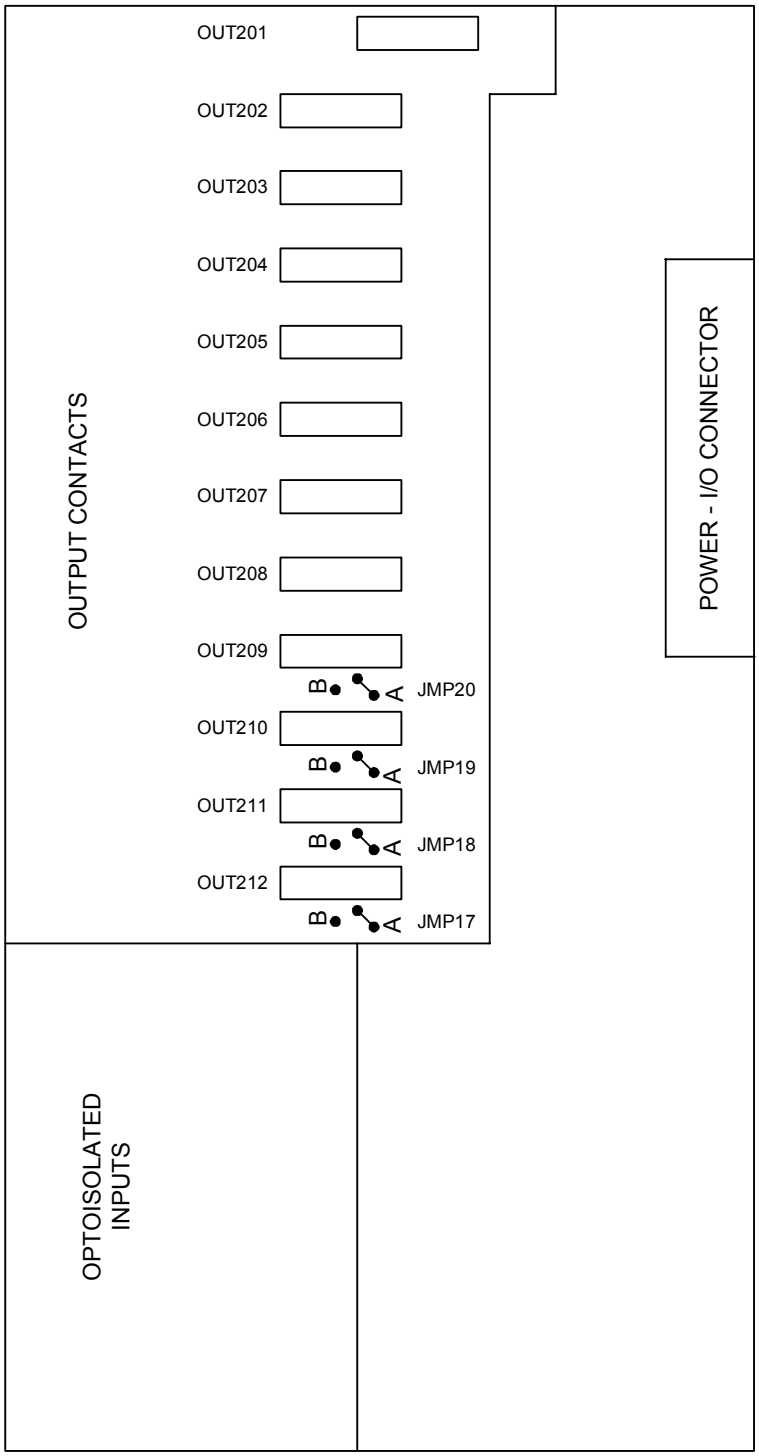

Figure 5.28: Jumper, Connector, and Major Component Locations on the SEL-300G Relay Extra I/O Board (Model 0300G_Y, Plug-In Connector Version)

Output Contact Jumpers

Table 5.2 shows the correspondence between output contact jumpers and the output contacts they control. The referenced figures show the exact location and correspondence. With a jumper in the A position, the corresponding output contact is an "a" type output contact. An "a" type output contact is open when the output contact coil is de-energized and closed when the output contact coil is energized. With a jumper in the B position, the corresponding output contact is a "b" type output contact. A "b" type output contact is closed when the output contact coil is de-energized and open when the output contact coil is energized. These jumpers are soldered in place.

In the figures referenced in Table 5.2, note that the ALARM output contacts are "b" type output contacts and the other output contacts are all "a" type output contacts. This is how these jumpers are configured in a **standard relay shipment**. Refer to corresponding Figure 4.16 and Figure 4.17 for examples of output contact operation for different output contact types.

Table 5.2: Output Contact Jumpers and Corresponding Output Contacts

SEL-300G Relay Model Number	Output Contact Jumpers	Corresponding Output Contacts	Reference Figures
All Models	JMP21–JMP29 (but not JMP23)	ALARM–OUT101	Figure 5.26
0300G_1	JMP17–JMP28	OUT212–OUT201	Figure 5.27
0300G_Y	JMP17–JMP20	OUT212–OUT209	Figure 5.28

"Extra Alarm" Output Contact Control Jumper

All the SEL-300G models have dedicated alarm output contacts (labeled ALARM—see Figure 5.4 through Figure 5.11). Often more than one alarm output contact is needed for such applications as local or remote annunciation, backup schemes, etc. An extra alarm output contact can be had for all the SEL-300G models without the addition of any external hardware.

The output contact next to the dedicated ALARM output contact can be converted to operate as an "extra alarm" output contact by moving a jumper on the main board (see Table 5.3).

Table 5.3: "Extra Alarm" Output Contacts and Corresponding Controlling Jumpers

SEL-300G Relay Model Number	"Extra Alarm" Output Contact	Controlling Jumper	Reference Figures
All Models	OUT107	JMP23	Figure 5.26, Figure 4.16

The position of the jumper controls the operation of the output contact OUT107. With the jumper in one position, the output contact operates regularly. With the jumper in the other position, the output contact is driven by the same signal that operates the dedicated ALARM output contact (see Table 5.4).

Table 5.4: Required Position of Jumper JMP23 for Desired Output Contact OUT107 Operation (Models 0300G_0 and 0300G_1)

Position	Output Contact OUT107 Operation
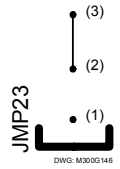	Regular output contact OUT107 (operated by Relay Word bit OUT107). Jumper JMP23 comes in this position in a **standard relay shipment** (see Figure 4.16).
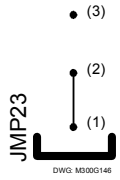	"Extra Alarm" output contact (operated by alarm logic/circuitry). Relay Word bit OUT107 does not have any effect on output contact OUT107 when jumper JMP23 is in this position (see Figure 4.16).

If an output contact is operating as an "extra alarm" (driven by the same signal that operates the dedicated ALARM output contact), it will be in the **opposite state** of the dedicated ALARM output contact in a **standard relay shipment**. In a standard relay shipment, the dedicated ALARM output contact comes as a "b" type output contact and all the other output contacts (including the "extra alarm") come as "a" type output contacts.

The output contact type for any output contact can be changed (see preceding subsection ***Output Contact Jumpers***). Thus, the dedicated ALARM output contact and the "extra alarm" output contact can be configured as the same output contact type if desired (e.g., both can be configured as "b" type output contacts).

Password and Breaker Jumpers

Table 5.5: Password and Breaker Jumper Positions for Standard Relay Shipments

SEL-300G Relay Model Number	Password Jumper/Position (standard relay shipments)	Breaker Jumper/Position (standard relay shipments)	Reference Figures
All Models	JMP6-A = OFF	JMP6-B = ON	Figure 5.26

Table 5.6: Password and Breaker Jumper Operation

Jumper Type	Jumper Position	Function
Password	ON (in place)	disable password protection[a] for serial ports and front panel
	OFF (removed/not in place)	enable password protection[a] for serial ports and front panel
Breaker	ON (in place)	enable serial port commands **OPEN**, **CLOSE**, and **PULSE**[b]
	OFF (removed/not in place)	disable serial port commands **OPEN**, **CLOSE**, and **PULSE**[b]

[a]View or set the passwords with the **PASSWORD** command (see ***Section 10: Serial Port Communications and Commands***).

[b]The **OPEN**, **CLOSE**, and **PULSE** commands are used primarily to assert output contacts for circuit breaker control or testing purposes (see ***Section 10: Serial Port Communications and Commands***).

Note that jumper JMP6 in Figure 5.26 has C and D jumper positions, too. Jumpers should not be installed in the C and D jumper positions.

EIA-232 Serial Port Voltage Jumpers

The jumpers listed in Table 5.7 connect or disconnect +5 Vdc to Pin 1 on the corresponding EIA-232 serial ports. The +5 Vdc is rated at 0.5 A maximum for each port. See Table 10.2 in ***Section 10: Serial Port Communications and Commands*** for EIA-232 serial port pin functions.

In a **standard relay shipment**, the jumpers are "OFF" (removed/not in place) so that the +5 Vdc is not connected to Pin 1 on the corresponding EIA-232 serial ports. Put the jumpers "ON" (in place) so that the +5 Vdc is connected to Pin 1 on the corresponding EIA-232 serial ports.

Condition of Acceptability for North American Product Safety Compliance

To meet product safety compliance for end-use applications in North America, use an external fuse rated 3 A or less in-line with the +5 Vdc source on Pin 1. SEL fiber-optic transceivers include a fuse that meets this requirement.

Table 5.7: EIA-232 Serial Port Voltage Jumper Positions for Standard Relay Shipments

SEL-300G Relay Model Number	EIA-232 Serial Port 2 (rear panel)	EIA-232 Serial Port 3 (rear panel)	Reference Figure
All Models	JMP2 = OFF	JMP1 = OFF	Figure 5.26

Clock Battery

Refer to Figure 5.26 for clock battery location (front of main board). A lithium battery powers the relay clock (date and time) if the external dc source is lost or removed. The battery is a 3 V lithium coin cell. At room temperature (25°C), the battery will operate nominally for 10 years at rated load.

If the dc source is lost or disconnected, the battery discharges to power the clock. When the relay is powered from an external source, the battery only experiences a low self-discharge rate. Thus, battery life can extend well beyond the nominal 10 years because the battery rarely has to discharge after the relay is installed. The battery cannot be recharged.

CAUTION

There is danger of explosion if the battery is incorrectly replaced. Replace only with Ray-O-Vac® no. BR2335 or equivalent recommended by manufacturer. Dispose of used batteries according to the manufacturer's instructions.

If the relay does not maintain the date and time after power loss, replace the battery. Follow the instructions in the previous subsection ***Accessing the Relay Main Board (All Models) and Extra I/O Board (Models 0300G_1 and 0300G_Y)*** to remove the relay main board. Remove the battery from beneath the clip and install a new one. The positive side (+) of the battery faces up. Reassemble the relay as described in ***Accessing the Relay Main Board (All Models) and Extra I/O Board (Models 0300G_1 and 0300G_Y)***. Set the relay date and time via serial communications port or front panel (see ***Section 10: Serial Port Communications and Commands*** or ***Section 9: Front-Panel Operation***, respectively).

TABLE OF CONTENTS

SECTION 6: ENTER RELAY SETTINGS 6-1

Introduction 6-1
Settings Changes via the Serial Port 6-1
Introduction 6-1
Communication Setup 6-2
Terminal Emulation 6-2
Establish Communication 6-2
Setting Entry 6-2
Setting Entry Error Messages 6-3
Modify Settings via the Front Panel 6-6
Settings Sheets 6-9

TABLES

Table 6.1: Serial Port SET Commands 6-1
Table 6.2: SET Command Editing Keystrokes 6-3
Table 6.3: Setting Interdependency Error Messages 6-4

FIGURES

Figure 6.1: Front-Panel SET Pushbutton Options Setting Sheets 6-8

SECTION 6: ENTER RELAY SETTINGS

INTRODUCTION

The SEL-300G Relay stores settings you enter in nonvolatile memory. Settings are divided into the following four setting classes:

1. Group
2. Global
3. Port *p* (where *p* = F, 1, 2, or 3)
4. Report

Some setting classes have multiple instances. In the above list, there are four port setting instances, one for each serial port.

Settings may be viewed or set in several ways, as shown in Table 6.1.

Table 6.1: Methods of Accessing Settings

	Serial Port Commands[a]	Front Panel HMI Set Menu[b]	ACSELERATOR® QuickSet SEL-5030 (PC software)[c]
Display Settings	All settings (**SHO** Command)	All settings	All settings
Change Settings	All settings (**SET** Command)	All settings	All settings

[a] View settings with the respective serial port **SHOWSET** commands (**SHO**, **SHO G**, **SHO R**, **SHO P**). See ***SHO Command (Show View Settings)*** in ***Section 10: Serial Port Communications and Commands***.

[b] Refer to ***Section 9: Front-Panel Operation*** for detailed information on the front-panel menus and screens and operator control pushbuttons.

[c] Refer to ***Appendix G: ACSELERATOR QuickSet SEL-5030 Software*** for detailed information.

SETTINGS CHANGES VIA THE SERIAL PORT

Introduction

All available relay settings may be viewed or modified using the relay serial ports, via the **SET** and **SHOWSET** commands described above. To view or modify relay settings through a serial port, you must connect a PC to the serial port, establish serial communication at the appropriate access level, then use the relay commands appropriate to the particular task. These steps are described in more detail in the following paragraphs.

Communication Setup

Typically, it is easiest to connect the EIA-232 serial port of a PC to one of the relay EIA-232 serial ports directly using a metallic or fiber-optic cable. ***Section 10: Serial Port Communications and Commands*** describes the cable necessary to make these connections. The SEL-5801 Cable Selector software is also helpful to determine the correct cabling for relay communications. This software is available free of charge from the factory or may be downloaded from our website at www.selinc.com.

Terminal Emulation

As described in ***Section 10: Serial Port Communications and Commands***, SEL relays respond to ASCII text commands entered on the relay serial port. PC terminal emulation packages such as Microsoft® Windows® Terminal, Procomm Plus®, SmartCOM®, CROSSTALK®, and many other packages allow ASCII commands to be sent from the PC serial port and relay responses displayed.

Configure the terminal emulation package you select to operate the PC COM port (COM1, COM2, etc.) at the relay baud rate (factory default 2400 bd), using 8 data bits, 1 stop bit, no parity bit, and XON/XOFF flow control. Refer to the terminal emulation package documentation for assistance in making these PC communication port configuration settings.

Establish Communication

Note: In this manual, commands you type appear in bold/uppercase: **SET**. Computer keys you press appear in bold/brackets: **<Enter>**.

Prepare to enter relay settings by connecting the PC (equipped with serial port and terminal emulation software) to the relay serial port using the correct communication cable.

Apply power to the relay, turn on the PC, and start the terminal emulation software package.

If necessary, configure the terminal emulation software for communication with the relay (see above for basic guidelines; ***Section 10: Serial Port Communications and Commands*** contains additional details).

With the terminal emulation software active at the terminal screen, you should see an = prompt appear on the screen after you press the **<Enter>** or **<Return>** key on the PC keyboard.

The = prompt is the indication that the relay is communicating at Access Level 0. Relay settings are entered at Access Level 2.

Setting Entry

See ***Section 10: Serial Port Communications and Commands*** for information on serial port communications and relay access levels. The **SET** commands in Table 6.1 operate at Access Level 2 (screen prompt: =>>).

When you issue the **SET** command, the relay presents a list of settings, one at a time. Enter a new setting, or press **<Enter>** to accept the existing setting. Editing keystrokes are shown in Table 6.2.

Table 6.2: SET Command Editing Keystrokes

Press Key(s)	Results
<Enter>	Retains setting and moves to the next setting.
^ <Enter>	Returns to previous setting.
< <Enter>	Returns to previous setting category.
> <Enter>	Moves to next setting category.
End <Enter>	Exits editing session, then prompts you to save the settings.
<Ctrl> X	Aborts editing session without saving changes.

The relay checks each entry to ensure that it is within the setting range. If it is not, an "Out of Range" message is generated, and the relay prompts for the setting again.

When all the settings are entered, the relay displays the new settings and prompts for approval to enable them. Answer **Y <Enter>** to enable the new settings. If changes are made to Global, SER, or Port settings (see Table 6.1), the relay is disabled while it saves the new settings. If changes are made to the Group settings for the active setting group (see Table 6.1), the relay is disabled while it saves the new settings. The ALARM contact closes momentarily for "b" contact (opens for an "a"; see Figure 4.16), and the EN LED extinguishes while the relay is disabled. The relay is disabled for as long as 15 seconds.

If changes are made to the Group settings for the inactive setting group (see Table 6.1), the relay is not disabled while it saves the new settings. The ALARM contact closes momentarily for "b" contact (opens for an "a"; see Figure 4.16), but the EN LED remains on while the new settings are saved.

To change a specific setting, enter the command:

SET *n m s* TERSE

where

n = G, R, or P (parameter "*n*" is not entered for the Group settings).

m = group (1 or 2) or port (1, 2, 3, or F). The relay selects the active group or port if "m" is not specified.

s = the name of the specific setting you wish to jump to and begin setting. If "s" is not entered, the relay starts at the first setting.

TERSE = instructs the relay to skip the SHOWSET display after the last setting. Use this parameter to speed up the **SET** command. If you wish to review the settings before saving, do not use the TERSE option.

Setting Entry Error Messages

As you enter relay settings, the relay checks the setting entered against the setting's own range, as published on the relay setting sheet. If any setting entered falls outside its range, the relay immediately responds 'Out of Range' and prompts you to reenter the setting.

In addition to the immediate range check, several of the settings have interdependency checks with other settings. The relay checks setting interdependencies after you answer 'Y' to the 'Save Settings?' prompt, but before the settings are stored. If any of these checks fail, the relay issues one of the error messages shown in Table 6.3, and returns you to the settings list for a correction.

Table 6.3: Setting Interdependency Error Messages

Error Message	Settings or Function	To Correct the Condition:
24D2P2 must be > 24IP 24D2P2 must be > 24D2P1	Volts/Hertz Element	Increase the 24D2P2 setting to satisfy the requirement shown in the error message.
25VHI must be > 25VLO 25SHI must be > 25SLO CFANGL must be > than 25ANG1, 25ANG2, and CANGLE	Synch-Check Function	Modify the 25VHI, 25SHI, or CFANGL setting to satisfy the requirement shown in the error message.
Warning: (25SHI*TCLOSD*360 must be < 120) and (25SLO*TCLOSD*360 must be > –120) Reduce 25SHI or increase 25SLO to bring within safe bounds.	Synch-Check Function	To eliminate the possibility of a badly out-of-synch close, reduce the 25SHI setting or increase the 25SLO setting. This narrows the range of acceptable slip frequency and reduces the lead angle of the CLOSE signal under 120 degrees.
Zone 2 must fully encompass Zone 1	Loss-of-Field Function	Increase the 40Z2P and/or 40XD2 setting to make the Zone 2 element larger than the Zone 1 element.
Time dial setting out of range for selected curve family.	51xTD	Change the affected time-dial setting. The acceptable time-dial setting range is different for the U and C curve families.
59PP1 and 2 must be ≤ 200 V for DELTA_Y = D in both setting groups	Overvoltage Function	Modify the 59PP1 and/or 59PP2 settings to satisfy the requirement shown in the error message.
UBND1 must be > LBND1 LBND1 must be > LBND2 LBND2 must be > LBND3 LBND3 must be > LBND4 LBND4 must be > LBND5 LBND5 must be > LBND6	81AC Function	Correct the frequency band settings so that lower numbered bands are closer to the nominal generator frequency.
CTR/CTRN must be ≥ 1 CTR/CTRN must be ≤ 40	Ground Differential Function	Select a different neutral CT tap or install an auxiliary CT in the neutral current path to bring the ratio of CT ratios within the range 1 to 40.
87N1P must be ≥ 0.02*In*CTR/CTRN 87N2P must be ≥ 0.02*In*CTR/CTRN	Ground Differential Function	Increase the referenced settings to satisfy the requirement shown in the error message. (In = Nominal Secondary Input Current, 1 or 5 A.)

Error Message	Settings or Function	To Correct the Condition:
CTCON out of range for selected TRCON	Current Differential Function	Verify that the CT connection selected is compatible with the transformer connection selected. Review the combinations available, as shown in ***Appendix H: Differential Connection Diagrams***.
TAP quantities must be in the range (0.5–160.0) TAP quantities must be in the range (0.1–32.0) TAP_{max}/TAP_{min} must be ≤ 7.5	Current Differential Function	Verify the TAP settings, or select a different transformer high-side CT ratio (CTRD) to bring TAP values into an acceptable range.
(O87P*TAP_{min}) & (O87P*TAP_{max}) must be in the range (0.2–160.0) (O87P*TAP_{min}) & (O87P*TAP_{max}) must be in the range (0.04–32.0) (U87P*TAP_{min}) & (U87P*TAP_{max}) must be in the range (0.5–160.0) (U87P*TAP_{min}) & (U87P*TAP_{max}) must be in the range (0.1–32.0) (IRS1*TAP_{min}) & (IRS1*TAP_{max}) must be in the range (0.5–160.0) (IRS1*TAP_{min}) & (IRS1*TAP_{max}) must be in the range (0.1–32.0)	Current Differential Function	Modify the O87P, U87P, or IRS1 setting to satisfy the requirement shown in the error message.
Overall SELOGIC® setting size too large. Try simplifying equations.	SELOGIC control equations	Reduce the total amount of SELOGIC control equation space used by collecting terms or using single sets of parentheses.
PRE must be less than LER	Event Length Global Settings	Set the event prefault length, PRE, less than the event length, LER.
KASP1 must be < KASP2 KASP1 must be > KASP3/100 KASP2 must be ≤ KASP3 KASP3 must be ≥ 5 times KASP1 COSP1 must be > COSP2 COSP2 must be > COSP3 If KASP2 = KASP3, COSP2 must = COSP3.	Breaker Monitor Function	Modify the referenced settings to satisfy the requirement shown in the error message.
Invalid alias format Element already aliased	SER alias name function	Verify the format of the setting entered and ensure that you have not previously aliased this element.
The sum of 78FWD and 78REV must be ≤ 100.1 Ohms	Out-of-Step Function Single and Double Blinder Schemes (5 A relays)	Adjust the Forward and the Reverse Reach so that the sum of the two is either equal to or less than 100.1 Ohms.

Error Message	Settings or Function	To Correct the Condition:
The sum of 78FWD and 78REV must be ≤ 500.5 Ohms	Out-of-Step Function Single and Double Blinder Schemes (1 A relays)	Adjust the Forward and the Reverse Reach so that the sum of the two is either equal to or less than 500.5 Ohms.
Radius of 78Z1 must be < 78R1	Out-of-Step Function Double Blinder Scheme	Increase the setting of 78R1 (Outer Resistance Blinder).
Radius of 78Z1 must be ≥ 78R2	Out-of-Step Function Double Blinder Scheme	Decrease the setting of 78R2 (Inner Resistance Blinder).
78R2 must be ≥ 5% and ≤ 100% of 78FWD or 78REV, whichever is greater	Out-of-Step Function Double Blinder Scheme	Increase the setting of 78R2.
Radius of 78Z1 must be > 78R1	Out-of-Step Function Single Blinder Scheme	Decrease the setting of 78R1.
Radius of 78Z1 must be > 78R2	Out-of-Step Function Single Blinder Scheme	Decrease the setting of 78R2.
78R1 must be ≥ 5% and ≤ 100% of 78FWD or 78REV, whichever is greater	Out-of-Step Function Single Blinder Scheme	Increase the setting of 78R1.
78R2 must be ≥ 5% and ≤ 100% of 78FWD or 78REV, whichever is greater	Out-of-Step Function Single Blinder Scheme	Increase the setting of 78R2.
Need one ambient RTD to be AMB biased	RTD Configuration	Set one RTD*n*LOC = AMB
Only one ambient RTD allowed	RTD Configuration	Set RTD*n*LOC to something other than AMB
VNOM must be ≤ 140 V for DELTA_Y = D in both setting groups	Nominal Voltage	Modify the VNOM settings to satisfy the requirement shown in the error message.
Settings / permitted settings combinations NLB_ label label label null CLB_ label label label null SLB_ label null label null PLB_ null label label null	Local Control Switch	Modify Local Bit Label settings to satisfy the requirement shown in the error message (see Table 4.4 for the Required Label Settings).

MODIFY SETTINGS VIA THE FRONT PANEL

You may view or modify many relay settings using the front-panel SET pushbutton. Because some settings are not available through the front panel, we do not recommend that initial relay settings be entered in this manner. However, modifications to element pickup and time-delay settings may be made quickly and easily using the front panel.

When you press the front-panel SET button, the front-panel LCD displays the following options:

```
GROUP     GLOBAL
PORT      PASS
```

The underlined G in GROUP identifies that, if you press the SELECT pushbutton, you will be presented with options associated with the relay element group settings. Move the underline to select the other options by pressing the Up, Down, Left, and Right arrow pushbuttons. Figure 6.1 summarizes the SET pushbutton options.

To terminate settings viewing or modification at any point in the process, press the EXIT pushbutton. The relay will return to the default display without saving any setting modifications.

Within the settings lists, the relay displays the setting category name. Press the SELECT pushbutton to view or modify settings within that category. Use the Up and Down arrow pushbuttons to maneuver within the settings list.

After finding the setting you wish to modify, press the SELECT pushbutton.

Modify numeric settings by using the Left, Right arrow pushbuttons to underline single digits, then the Up, Down arrow pushbuttons to change the digit, similar to moving a thumbwheel.

Modify Y/N enable settings by using the Up, Down arrow pushbuttons to change the setting from Y to N and back.

To learn more about a setting and its range, press the Target Reset/Lamp Test pushbutton while the setting is displayed.

After modifying a setting, press the SELECT pushbutton to proceed to the next setting.

After finishing all setting modifications, press the Down arrow pushbutton several times to proceed to the bottom of the settings list. The relay will display the message:

```
Save Changes    ←→

Yes  No
```

To save your modifications and enable the relay with your new settings, press the SELECT pushbutton with underscore beneath the Y in Yes.

To exit without saving, press the Right arrow pushbutton to move the underscore beneath the N in No, then press the SELECT pushbutton.

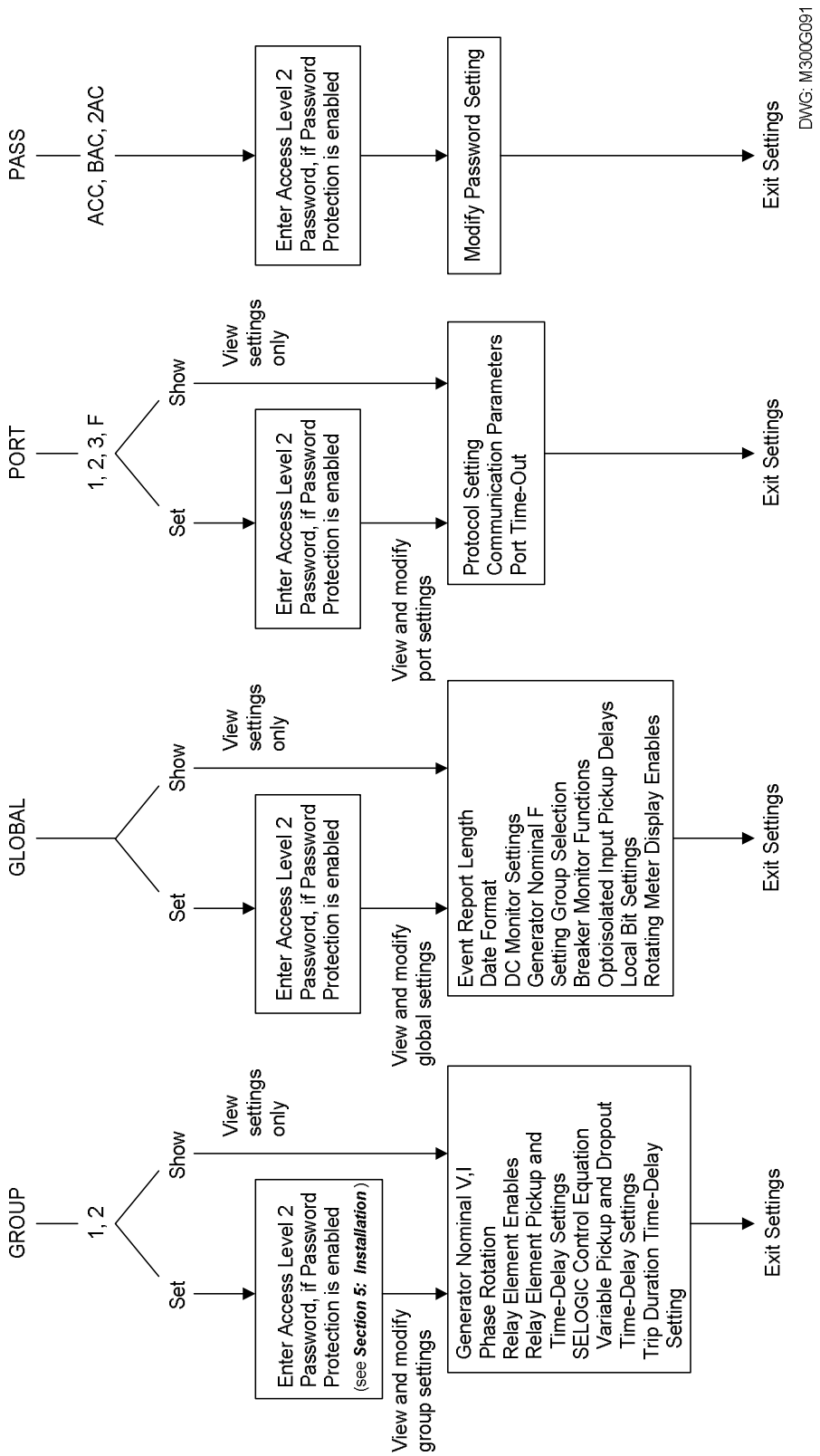

Figure 6.1: Front-Panel SET Pushbutton Options Setting Sheets

SETTINGS SHEET FOR THE SEL-300G RELAY

Date _____

RELAY SETTINGS (SERIAL PORT COMMAND SET AND FRONT PANEL)

Identifier Labels

Relay Identifier (39 characters) RID = _____

Terminal Identifier (59 characters) TID = _____

Current and Potential Transformer Configuration

Phase (IA, IB, IC) Current Transformer Ratio
(1–10000 {5 A model}; 1–50000 {1 A model}) CTR = _____

Differential (IA87, IB87, IC87) Current Transformer Ratio
(1–10000 {5 A model}; 1–50000 {1 A model})
(hidden if relay is not equipped with differential current inputs) CTRD = _____

Neutral (IN) Current Transformer Ratio (1–10000) CTRN = _____

Phase (VA, VB, VC) Potential Transformer Ratio (1.00–10000.00) PTR = _____

Neutral (VN) Potential Transformer Ratio (1.00–10000.00) PTRN = _____

Synch Voltage (VS) Potential Transformer Ratio (1.00–10000.00)
(hidden if relay is not equipped with synch-check function) PTRS = _____

Nominal Voltage
(80.0–140.0 V {DELTA_Y = D};
80.0–208.0 V {DELTA_Y = Y} line-to-line) VNOM = _____

Nominal Current (1.0–10.0 A {5 A model}; 0.2–2.0 A {1 A model}) INOM = _____

Phase Rotation (ABC, ACB) PHROT = _____

Protection Element Enables

Enable Backup System Protection (N, D, DC, V, C {firmware R320 and higher}; N, D, V, C {firmware < R320}) EBUP = _____

Enable Load Encroachment (Y, N) [Applies to firmware R320 and higher]
(hidden when EBUP = N, V, or C) ELE = _____

Enable Volts/Hertz Protection (Y, N) E24 = _____

Enable Synchronism Checking (Y, N) [Model 300G2, 300G3] E25 = _____

Enable Undervoltage (U/V) Protection (Y, N) E27 = _____

Enable Reverse/Low-Forward Power Protection (Y, N) E32 = _____

Enable Loss-of-Field Protection (Y, N) E40 = _____

Enable Negative-Sequence Overcurrent (O/C) Protection (Y, N) E46 = _____

Enable O/C Protection (Y, N) E50 = _____

Enable 87-Input O/C Protection (Y, N) [Model 300G1, 300G3] E50_87 = _____

Enable Time-O/C Protection (Y, N) E51 = _____

Enable Overvoltage (O/V) Protection (Y, N) E59 = _____

Enable 100% Stator Ground Protection (Y, N) E64 = _____

Enable Out-of-Step Protection (1B, 2B, N) E78 = _____

Enable Frequency Protection (N, 1–6) E81 = _____

Enable Abnormal Frequency Scheme (N, 1–6) E81AC = _____

Enable Differential Protection (G, T, N) [Model 300G1, 300G3] E87 = _____

Enable Ground Differential Protection (Y, N) [Model 300G0, 300G2] E87N = _____

Enable SELOGIC® Control Equation Variables (0–16) ESV = _____

Enable Set/Reset Latch Variables (0–16) ESL = _____

SETTINGS SHEET FOR THE SEL-300G RELAY

RELAY SETTINGS (SERIAL PORT COMMAND SET AND FRONT PANEL)

Enable Demand Metering (THM, ROL) EDEM = _____

21 MHO Elements (hidden when EBUP ≠ D)

Zone 1 Phase Distance Reach
(OFF, 0.1–100.0 Ohms {5 A model}; OFF, 0.5–500.0 Ohms {1 A model}) Z1R = _____

Zone 1 Phase Distance Offset
(0.0–10.0 Ohms {5 A model}; 0.0–50.0 Ohms {1 A model})
(hidden when Z1R = OFF) Z1O = _____

Zone 1 Maximum Torque Angle (90–45 degrees)
(hidden when Z1R = OFF) MTA1 = _____

Zone 1 Transformer Compensation (0, –30, 30 degrees)
(hidden when Z1R = OFF) Z1CMP = _____

Zone 1 Phase Distance Time Delay (0.00 to 400.00 seconds)
(hidden when Z1R = OFF) Z1D = _____

Zone 2 Phase Distance Reach
(OFF, 0.1–100.0 Ohms {5 A model}; OFF, 0.5–500.0 Ohms {1 A model}) Z2R = _____

Zone 2 Phase Distance Offset
(0.0–10.0 Ohms {5 A model}; 0.0–50.0 Ohms {1 A model})
(hidden when Z2R = OFF) Z2O = _____

Zone 2 Maximum Torque Angle (90–45 degrees)
(hidden when Z2R = OFF) MTA2 = _____

Zone 2 Transformer Compensation (0, –30, 30 degrees)
(hidden when Z2R = OFF) Z2CMP = _____

Zone 2 Phase Distance Time-Delay (0.00 to 400.00 seconds)
(hidden when Z2R = OFF) Z2D = _____

Minimum Power Factor (OFF, 0.98–0.50) [Applies to firmware < R320] MPF = _____

Maximum Generator Load (0.5–3.0 per unit) [Applies to firmware < R320]
(hidden when MPF = OFF) MXLD = _____

21P Element Torque Control (SELOGIC control equation)
21PTC = _____

21 Compensator Elements (hidden when EBUP ≠ DC) [Requires firmware R320 or higher]

Zone 1 Compensator Reach
(OFF, 0.1–100.0 Ohms {5 A model}; OFF, 0.5–500.0 Ohms {1 A model}) Z1C = _____

Zone 1 Compensator Offset
(0.0–10.0 Ohms {5 A model}; 0.0–50.0 Ohms {1 A model})
(hidden when Z1C = OFF) Z1CO = _____

Zone 1 Compensator Time Delay (0.00 to 400.00 seconds)
(hidden when Z1C = OFF) Z1CD = _____

Zone 1 Phase-Phase Current FD (0.5–170.0 A)
(hidden when Z1C = OFF) 50PP1 = _____

Zone 1 Pos-Seq Impedance Angle (90–45 degrees)
(hidden when Z1C = OFF) ZANG1 = _____

Zone 2 Compensator Reach
(OFF, 0.1–100.0 Ohms {5 A model}; OFF, 0.5–500.0 Ohms {1 A model}) Z2C = _____

Zone 2 Compensator Offset
(0.0–10.0 Ohms {5 A model}; 0.0–50.0 Ohms {1 A model}) _____

RELAY SETTINGS (SERIAL PORT COMMAND SET AND FRONT PANEL)

(hidden when Z2C = OFF) Z2CO = _____

Zone 2 Compensator Time Delay (0.00 to 400.00 seconds)
(hidden when Z2C = OFF) Z2CD = _____

Zone 2 Phase-Phase Current FD (0.5–170.0 A)
(hidden when Z2C = OFF) 50PP2 = _____

Zone 2 Pos-Seq Impedance Angle (90–45 degrees)
(hidden when Z2C = OFF) ZANG2 = _____

21C Element Torque Control (SELOGIC control equation)
21CTC = _____

Load Encroachment (hidden when ELE = N) [Applies to firmware R320 and higher]

Minimum Power Factor (OFF, 0.98–0.50) MPF = _____

Maximum Generator Load (0.5–3.0 per unit)
(hidden when MPF = OFF) MXLD = _____

24 Elements (hidden when E24 = N)

Level 1 Volts/Hertz Pickup (100–200%) 24D1P = _____

Level 1 Time Delay (0.00–400.00 s) 24D1D = _____

Level 2 Composite Curve Shape (OFF, DD, ID, I) 24CCS = _____

Level 2 Inverse-Time Pickup (100–200%)
(hidden when 24CCS = OFF, DD) 24IP = _____

Level 2 Inverse-Time Curve (0.5, 1, 2)
(hidden when 24CCS = OFF, DD) 24IC = _____

Level 2 Inverse-Time Factor (0.1–10.0 s)
(hidden when 24CCS = OFF, DD) 24ITD = _____

Level 2 Pickup One (100–200%)
(hidden when 24CCS = OFF, ID, I) 24D2P1 = _____

Level 2 Time-Delay One (0.00–400.00 s)
(hidden when 24CCS = OFF, ID, I) 24D2D1 = _____

Level 2 Pickup Two (101–200%)
(hidden when 24CCS = OFF, I) 24D2P2 = _____

Level 2 Time-Delay Two (0.00–400.00 s)
(hidden when 24CCS = OFF, I) 24D2D2 = _____

Level 2 Reset Time (0.00–400.00 s) (hidden when 24CCS = OFF) 24CR = _____

24 Element Torque Control (SELOGIC control equation)
24TC = _____

25 Elements for Model 300G2, 300G3 (hidden when E25 = N)

Synch-Check Phase (VA, VB, VC, VAB, VBC) SYNCP = _____

Voltage Window, Low Threshold (20.0–200.0 V) 25VLO = _____

Voltage Window, High Threshold (20.0–200.0 V) 25VHI = _____

Maximum Voltage Difference (OFF, 1.0–15.0%) 25VDIF = _____

Voltage Ratio Correction Factor (0.500–2.000) 25RCF = _____

Generator Voltage High Required (Y, N)
(hidden when 25VDIF = OFF) GENV+ = _____

Minimum Slip Frequency (–1.00 to 0.99 Hz) 25SLO = _____

SETTINGS SHEET FOR THE SEL-300G RELAY

RELAY SETTINGS (SERIAL PORT COMMAND SET AND FRONT PANEL)

Maximum Slip Frequency (–0.99 to 1.00 Hz)	25SHI = _____
Transformer Compensation Angle (0, 30, –30 degrees)	COMPA = _____
Maximum Angle 1 (0–80 degrees)	25ANG1 = _____
Maximum Angle 2 (0–80 degrees)	25ANG2 = _____
Target Close Angle (–15 to 15 degrees)	CANGLE = _____
Breaker Close Time (0.000 to 1.000 s)	TCLOSD = _____
Close Fail Angle (OFF, 3–120 degrees)	CFANGL = _____
Dead-Bus Undervoltage (OFF, 0.1–200.0 V)	27VSP = _____

Block Synch-Check (SELOGIC control equation)
BSYNCH = _____

27 Elements (hidden when E27 = N)

Level 1 Phase U/V Pickup (OFF, 0.1–200.0 V) (hidden when DELTA_Y = D)	27P1P = _____
Level 2 Phase U/V Pickup (OFF, 0.1–200.0 V) (hidden when DELTA_Y = D)	27P2P = _____
Positive-Sequence U/V Pickup (OFF, 0.1–200.0 V)	27V1P = _____
Level 1 Phase-to-Phase U/V Pickup (OFF, 0.1–200.0 V)	27PP1 = _____
Level 2 Phase-to-Phase U/V Pickup (OFF, 0.1–200.0 V)	27PP2 = _____

32 Elements (hidden when E32 = N)

Level 1 Power Threshold (±0.0015 to ±3.0000 pu)	32P1P = _____
Level 1 Power Time Delay (0.01–400.00 s)	32P1D = _____
Level 2 Power Threshold (OFF, ±0.0015 to ±3.0000 pu)	32P2P = _____
Level 2 Power Time Delay (0.01–400.00 s) (hidden when 32P2P = OFF)	32P2D = _____

32 Element Torque Control (SELOGIC control equation)
32PTC = _____

40 Elements (hidden when E40 = N)

Zone 1 Mho Diameter (OFF, 0.1–100.0 Ohms {5 A model}; OFF, 0.5–500.0 Ohms {1 A model})	40Z1P = _____
Zone 1 Offset Reactance (-50.0–0.0 Ohms {5 A model}; –250.0–0.0 Ohms {1 A model})	40XD1 = _____
Zone 1 Pickup Time Delay (0.00–400.00 s)	40Z1D = _____
Zone 2 Mho Diameter (OFF, 0.1–100.0 Ohms {5 A model}; OFF, 0.5–500.0 Ohms {1 A model})	40Z2P = _____
Zone 2 Offset Reactance (–50.0–50.0 Ohms {5 A model}; –250.0–250.0 Ohms {1 A model} (hidden when 40Z2P = OFF)	40XD2 = _____
Zone 2 Pickup Time Delay (0.00–400.00 s) (hidden when 40Z2P = OFF)	40Z2D = _____
Zone 2 Directional Superv. Angle (–20.0°–0.0°) (hidden when 40Z2P = OFF or 40XD2 < 0)	40DIR = _____

40 Element Torque Control (SELOGIC control equation)
40ZTC = _____

46 Elements (hidden when E46 = N)

Level 1 Negative-Sequence O/C Pickup (OFF, 2–100%) 46Q1P = _____

Level 1 Negative-Sequence O/C Time Delay (0.02–999.90 s)
(hidden when 46Q1P = OFF) 46Q1D = _____

Level 2 Negative-Sequence Time-O/C Pickup (OFF, 2–100%) 46Q2P = _____

Level 2 Negative-Sequence Time-O/C Time Dial (1–100 s)
(hidden when 46Q2P = OFF) 46Q2K = _____

46Q Element Torque Control (SELOGIC control equation)
46QTC = _____

50 Elements (hidden when E50 = N)

Level 1 Phase O/C Pickup
(OFF, 0.25–100.00 A {5 A model}; OFF, 0.05–20.00 A {1 A model}) 50P1P = _____

Level 1 Phase O/C Time Delay (0.00–400.00 s)
(hidden when 50P1P = OFF) 50P1D = _____

Level 2 Phase O/C Pickup
(OFF, 0.25–100.00 A {5 A model}; OFF, 0.05–20.00 A {1 A model}) 50P2P = _____

Level 2 Phase O/C Time Delay (0.00–400.00 s)
(hidden when 50P2P = OFF) 50P2D = _____

Level 1 Neutral O/C Pickup
(OFF, 0.25–100.00 A {5 A model}; OFF, 0.05–20.00 A {1 A model}) 50N1P = _____

Level 1 Neutral O/C Time Delay (0.00–400.00 s)
(hidden when 50N1P = OFF) 50N1D = _____

Level 2 Neutral O/C Pickup
(OFF, 0.25–100.00 A {5 A model}; OFF, 0.05–20.00 A {1 A model}) 50N2P = _____

Level 2 Neutral O/C Time Delay (0.00–400.00 s)
(hidden when 50N2P = OFF) 50N2D = _____

Level 1 Residual O/C Pickup
(OFF, 0.25–100.00 A {5 A model}; OFF, 0.05–20.00 A {1 A model}) 50G1P = _____

Level 1 Residual O/C Time Delay (0.00–400.00 s)
(hidden when 50G1P = OFF) 50G1D = _____

Level 2 Residual O/C Pickup
(OFF, 0.25–100.00 A {5 A model}; OFF, 0.05–20.00 A {1 A model}) 50G2P = _____

Level 2 Residual O/C Time Delay (0.00–400.00 s)
(hidden when 50G2P = OFF) 50G2D = _____

50_87 Elements for Models 300G1 and 300G3 (hidden when E50_87 = N)

Level 1 Phase O/C Pickup
(OFF, 0.25–100.00 A {5 A model}; OFF, 0.05–20.00 A {1 A model}) 50H1P = _____

Level 1 Phase O/C Time Delay (0.00–400.00 s)
(hidden when 50H1P = OFF) 50H1D = _____

Level 2 A-Phase O/C Pickup
(OFF, 0.25–100.00 A {5 A model}; OFF, 0.05–20.00 A {1 A model}) 50H2PA = _____

Level 2 B-Phase O/C Pickup
(OFF, 0.25–100.00 A {5 A model}; OFF, 0.05–20.00 A {1 A model})
(hidden when 50H2PA = OFF) 50H2PB = _____

Level 2 C-Phase O/C Pickup
(OFF, 0.25–100.00 A {5 A model}; OFF, 0.05–20.00 A {1 A model})
(hidden when 50H2PA = OFF) 50H2PC = _____

RELAY SETTINGS (SERIAL PORT COMMAND SET AND FRONT PANEL)

_____

Level 2 Phase O/C Time Delay (0.00–400.00 s)
(hidden when 50H2PA = OFF) 50H2D = _____

Level 1 Negative-Sequence O/C Pickup
(OFF, 0.25–100.00 A {5 A model}; OFF, 0.05–20.00 A {1 A model}) 50Q1P = _____

Level 1 Negative-Sequence O/C Time Delay (0.00–400.00 s)
(hidden when 50Q1P = OFF) 50Q1D = _____

Level 2 Negative-Sequence O/C Pickup
(OFF, 0.25–100.00 A {5 A model}; OFF, 0.05–20.00 A {1 A model}) 50Q2P = _____

Level 2 Negative-Sequence O/C Time Delay (0.00–400.00 s)
(hidden when 50Q2P = OFF) 50Q2D = _____

Level 1 Residual O/C Pickup
(OFF, 0.25–100.00 A {5 A model}; OFF, 0.05–20.00 A {1 A model}) 50R1P = _____

Level 1 Residual O/C Time Delay (0.00–400.00 s)
(hidden when 50R1P = OFF) 50R1D = _____

Level 2 Residual O/C Pickup
(OFF, 0.25–100.00 A {5 A model}; OFF, 0.05–20.00 A {1 A model}) 50R2P = _____

Level 2 Residual O/C Time Delay (0.00–400.00 s)
(hidden when 50R2P = OFF) 50R2D = _____

51N Element (hidden when E51 = N)

Neutral Time-O/C Pickup
(OFF, 0.50–16.00 A {5 A model}; OFF, 0.10–3.20 A {1 A model}) 51NP = _____

Neutral Time-O/C Curve (U1–U5, C1–C5)
(hidden when 51NP = OFF) 51NC = _____

Neutral Time-O/C Time Dial (0.50–15.00, U curves; 0.05–1.00, C curves)
(hidden when 51NP = OFF) 51NTD = _____

Neutral Time-O/C EM Reset (Y, N)
(hidden when 51NP = OFF) 51NRS = _____

51N Element Torque Control (SELOGIC control equation)
(hidden when 51NP = OFF)
51NTC = _____

51G Element (hidden when E51 = N)

Residual Time-O/C Pickup
(OFF, 0.50–16.00 A {5 A model}; OFF, 0.10–3.20 A {1 A model}) 51GP = _____

Residual Time-O/C Curve (U1–U5, C1–C5)
(hidden when 51GP = OFF) 51GC = _____

Residual Time-O/C Time Dial (0.50–15.00, U curves; 0.05–1.00, C curves)
(hidden when 51GP = OFF) 51GTD = _____

Residual Time-O/C EM Reset (Y, N)
(hidden when 51GP = OFF) 51GRS = _____

51G Element Torque Control (SELOGIC control equation) (hidden when 51GP = OFF)
51GTC = _____

51C Element (hidden when EBUP ≠ C)

Volt Controlled Time-O/C Pickup
(0.50–16.00 A {5 A model}; 0.10–3.20 A {1 A model}) 51CP = _____

Volt Controlled Time-O/C Curve (U1–U5, C1–C5) 51CC = _____

Volt Controlled Time-O/C Time Dial
(0.50–15.00, U curves; 0.05–1.00, C curves) 51CTD = _____

Volt Controlled Time-O/C EM Reset (Y, N) 51CRS = _____

51C Element Torque Control (SELOGIC control equation)
51CTC = _____

51V Element (hidden when EBUP ≠ V)

Compensation Angle (0, –30, +30 deg) 51VCA = _____

Volt Restrained Time-O/C Pickup
(2.00–16.00 A {5 A model}; 0.40–3.20 A {1 A model}) 51VP = _____

Volt Restrained Time-O/C Curve (U1–U5, C1–C5) 51VC = _____

Volt Restrained Time-O/C Time Dial
(0.50–15.00, U curves; 0.05–1.00, C curves) 51VTD = _____

Volt Restrained Time-O/C EM Reset (Y, N) 51VRS = _____

51V Element Torque Control (SELOGIC control equation)
51VTC = _____

Open Pole Element

Three-Pole Open Time Delay (0.00–1.00 s) 3POD = _____

Load Detection Phase Pickup
(OFF, 0.25–100.00 A {5 A model}; OFF, 0.05–20.00 A {1 A model}) 50LP = _____

Generator Breaker Auxiliary (SELOGIC control equation)
52A = _____

59 Elements (hidden when E59 = N)

Level 1 Phase O/V Pickup (OFF, 0.0–200.0 V)
(hidden when DELTA_Y = D) 59P1P = _____

Level 2 Phase O/V Pickup (OFF, 0.0–200.0 V)
(hidden when DELTA_Y = D) 59P2P = _____

Level 1 Residual O/V Pickup (OFF, 0.0–200.0 V)
(hidden when DELTA_Y = D) 59G1P = _____

Level 2 Residual O/V Pickup (OFF, 0.0–200.0 V)
(hidden when DELTA_Y = D) 59G2P = _____

Negative-Sequence (V2) O/V Pickup (OFF, 0.0–200.0 V) 59QP = _____

Positive-Sequence (V1) O/V Pickup (OFF, 0.0–200.0 V) 59V1P = _____

Level 1 Phase-to-Phase O/V Pickup
(OFF, 0.0–200.0 V {DELTA_Y = D};
OFF, 0.0–300.0 V {DELTA_Y = Y} line-to-line) 59PP1 = _____

Level 2 Phase-to-Phase O/V Pickup
(OFF, 0.0–200.0 V {DELTA_Y = D};
OFF, 0.0–300.0 V {DELTA_Y = Y} line-to-line) 59PP2 = _____

SETTINGS SHEET FOR THE SEL-300G RELAY

RELAY SETTINGS (SERIAL PORT COMMAND SET AND FRONT PANEL)

64G Elements (hidden when E64 = N)

Zone 1 Neutral O/V Pickup (OFF, 0.1–150.0 V) 64G1P = _____

Zone 1 Time Delay (0.00–400.00 s) (hidden when 64G1P = OFF) 64G1D = _____

Zone 2 Differential Voltage (OFF, 0.1–20.0 V) 64G2P = _____

Zone 2 Ratio Setting (0.0–5.0) (hidden when 64G2P = OFF or when DELTA_Y = D) 64RAT = _____

Zone 2 Time Delay (0.00–400.00 s) (hidden when 64G2P = OFF) 64G2D = _____

64G Element Torque Control (SELOGIC control equation)

64GTC = _____

64F Elements (requires the SEL-2664 to provide Insulation Resistance Measurement)

64F Input Option (EXT, NONE) 64FOPT = _____

Level 1 Pickup (OFF, 0.5–200.0 kOhms) (hidden when 64FOPT = NONE) 64F1P = _____

Level 1 Delay (0.0–99.0 s) (hidden when 64FOPT = NONE or when 64F1P = OFF) 64F1D = _____

Level 2 Pickup (OFF, 0.5–200.0 kOhms) (hidden when 64FOPT = NONE) 64F2P = _____

Level 2 Delay (0.0–99.0 s) (hidden when 64FOPT = NONE or when 64F2P = OFF) 64F2D = _____

64F Element Torque Control (SELOGIC control equation) (hidden when 64FOPT = NONE)

64FTC = _____

78 Elements (hidden when E78 = N)

If E78 = 1B, the following settings will apply:

Forward Reach Reactance (0.1–100.0 Ohms {5 A model}; 0.5–500.0 Ohms {1 A model}) 78FWD = _____

Reverse Reach Reactance (0.1–100.0 Ohms {5 A model}; 0.5–500.0 Ohms {1 A model}) 78REV = _____

Right-Hand Blinder (0.1–50.0 Ohms {5 A model}; 0.5–250.0 Ohms {1 A model}) 78R1 = _____

Left-Hand Blinder (0.1–50.0 Ohms {5 A model}; 0.5–250.0 Ohms {1 A model}) 78R2 = _____

Out-of-Step Trip Delay (0.00–1.00 s) 78TD = _____

Out-of-Step Trip Duration (0.00–5.00 s) 78TDURD = _____

Positive-Sequence Current Supervision (0.25–30.00 A {5 A model}; 0.05–6.00 A {1 A model}) 50ABC = _____

78 Element Torque Control (SELOGIC control equation)

OOSTC = _____

If E78 = 2B, the following settings will apply:

Forward Reach Reactance (0.1–100.0 Ohms {5 A model}; 0.5–500.0 Ohms {1 A model}) 78FWD = _____

Reverse Reach Reactance (0.1–100.0 Ohms {5 A model}; 0.5–500.0 Ohms {1 A model}) 78REV = _____

Outer Resistance Blinder (0.2–100.0 Ohms {5 A model}; 1.0–500.0 Ohms {1 A model}) 78R1 = _____

Inner Resistance Blinder (0.1–50 Ohms {5 A model}; 0.5–250 Ohms {1 A model}) 78R2 = _____

RELAY SETTINGS (SERIAL PORT COMMAND SET AND FRONT PANEL)

Out-of-Step Delay (0.00–1.00 s)	78D =	_____
Out-of-Step Trip Delay (0.00–1.00 s)	78TD =	_____
Out-of-Step Trip Duration (0.00–5.00 s)	78TDURD =	_____
Positive-Sequence Current Supervision (0.25–30.00 A {5 A model}; 0.05–6.00 A {1 A model})	50ABC =	_____

78 Element Torque Control (SELOGIC control equation)
OOSTC = _____

81 Elements (hidden when E81 = N)

Undervoltage Block (20.0–150.0 V)	27B81P =	_____
Level 1 Pickup (OFF, 20.00–70.00 Hz)	81D1P =	_____
Level 1 Time Delay (0.03–400.00 s) (hidden when 81D1P = OFF)	81D1D =	_____
Level 2 Pickup (OFF, 20.00–70.00 Hz) (hidden when E81 < 2)	81D2P =	_____
Level 2 Time Delay (0.03–400.00 s) (hidden when E81 < 2 or 81D2P = OFF)	81D2D =	_____
Level 3 Pickup (OFF, 20.00–70.00 Hz) (hidden when E81 < 3)	81D3P =	_____
Level 3 Time Delay (0.03–400.00 s) (hidden when E81 < 3 or 81D3P = OFF)	81D3D =	_____
Level 4 Pickup (OFF, 20.00–70.00 Hz) (hidden when E81 < 4)	81D4P =	_____
Level 4 Time Delay (0.03–400.00 s) (hidden when E81 < 4 or 81D4P = OFF)	81D4D =	_____
Level 5 Pickup (OFF, 20.00–70.00 Hz) (hidden when E81 < 5)	81D5P =	_____
Level 5 Time Delay (0.03–400.00 s) (hidden when E81 < 5 or 81D5P = OFF)	81D5D =	_____
Level 6 Pickup (OFF, 20.00–70.00 Hz) (hidden when E81 < 6)	81D6P =	_____
Level 6 Time Delay (0.03–400.00 s) (hidden when E81 < 6 or 81D6P = OFF)	81D6D =	_____

81AC Elements (hidden when E81AC = N)

Upper Frequency Limit of Band 1 (20.0–70.0 Hz)	UBND1 =	_____
Lower Frequency Limit of Band 1 (20.0–70.0 Hz)	LBND1 =	_____
Band 1 Accumulator Limit Time (0.01–6000.00 s)	TBND1 =	_____
Lower Frequency Limit of Band 2 (20.0–70.0 Hz) (hidden when E81AC < 2)	LBND2 =	_____
Band 2 Accumulator Limit Time (0.01–6000.00 s) (hidden when E81AC < 2)	TBND2 =	_____
Lower Frequency Limit of Band 3 (20.0–70.0 Hz) (hidden when E81AC < 3)	LBND3 =	_____
Band 3 Accumulator Limit Time (0.01–6000.00 s) (hidden when E81AC < 3)	TBND3 =	_____
Lower Frequency Limit of Band 4 (20.0–70.0 Hz) (hidden when E81AC < 4)	LBND4 =	_____
Band 4 Accumulator Limit Time (0.01–6000.00 s) (hidden when E81AC < 4)	TBND4 =	_____
Lower Frequency Limit of Band 5 (20.0–70.0 Hz) (hidden when E81AC < 5)	LBND5 =	_____
Band 5 Accumulator Limit Time (0.01–6000.00 s) (hidden when E81AC < 5)	TBND5 =	_____
Lower Frequency Limit of Band 6 (20.0–70.0 Hz) (hidden when E81AC < 6)	LBND6 =	_____

SETTINGS SHEET FOR THE SEL-300G RELAY

RELAY SETTINGS (SERIAL PORT COMMAND SET AND FRONT PANEL)

Band 6 Accumulator Limit Time (0.01–6000.00 s)
(hidden when E81AC < 6) TBND6 = _____

Accumulator Time-Delayed Pickup (0.00–400.00 s) 62ACC = _____

Abnormal Frequency Element Control (SELOGIC control equation)
ONLINE = _____

87N Elements for Model 0300G0, 0300G2 (hidden when E87N = N)

Level 1 Ground Differential Pickup
(0.1 • CTR/CTRN to 15.0 A {5 A model};
0.02 • CTR/CTRN to 3.00 A {1 A model}) 87N1P = _____

Level 1 Ground Differential Time Delay (0.00 to 400.00 s) 87N1D = _____

Level 2 Ground Differential Pickup
(OFF, 0.1*CTR/CTRN to 15.0 A {5 A model};
OFF, 0.02*CTR/CTRN to 3.00 A {1 A model}) 87N2P = _____

Level 2 Ground Differential Time Delay (0.00 to 400.00 s)
(hidden when 87N2P = OFF) 87N2D = _____

87N Element Torque Control (SELOGIC control equation)
87NTC = _____

87 Elements for Model 0300G1, 0300G3 (hidden when E87 = N)

XFMR High-Side Winding L-L Voltage (OFF, 1.0–1000.0 kV)
(hidden when E87 = G) VWDGD = _____

XFMR (GEN, YY, YDAC, YDAB, DACDAC, DABDAB, DABY, DACY)
(hidden when E87 = G) TRCON = _____

87-Input CT Connection (Y, DAB, DAC) (hidden when E87 = G)
(Range depends on TRCON Setting) CTCON = _____

Phase Input TAP Value
(0.50–160.00 A {5 A model}; 0.10–32.00 A{1 A model}) TAP1 = _____

87-Input TAP Value
(0.50–160.00 A {5 A model}; 0.10–32.00 A{1 A model})
Note: Relay calculates TAP values when E87= G, or when E87 = T and VWDGD ≠ OFF. You must enter TAP settings if E87 = T and VWDGD = OFF.
TAP_{MAX}/TAP_{MIN} must be less than or equal to 7.5 TAPD = _____

Unrestrained Element Pickup, multiple of TAP (1.0–20.0)
Note: TAPMAX · U87P ≤ 160.0 A {5 A model}
TAPMAX · U87P ≤ 32.0 A {1 A model} U87P = _____

Restrained Element Pickup, multiple of TAP (0.04–1.00)
Note: TAP_{MIN} · O87P ≥ 0.2 A {5 A model}
TAP_{MIN} · O87P ≥ 0.04 A {1 A model} O87P = _____

Restraint Slope 1 Percentage (5–100%) SLP1 = _____

Restraint Slope 2 Percentage (OFF, 50–200%)
(hidden and set equal to 100% when E87 = G) SLP2 = _____

Restraint Slope 1 Limit, multiple of TAP (1.0–16.0)
(hidden and set equal to 3 when E87 = G)
Note: TAPMAX • IRS1 ≤ 160.0 A {5 A model}
TAPMAX • IRS1 ≤ 32.0 A {1 A model} IRS1 = _____

Second-Harmonic Blocking Percent (OFF, 5–100%)
(hidden and set equal to OFF when E87 = G) PCT2 = _____

RELAY SETTINGS (SERIAL PORT COMMAND SET AND FRONT PANEL)

Independent Harmonic Blocking (Y, N)
(hidden when E87 = G or when PCT2 = OFF) IHBL = _____

Restrained Element Block (SELOGIC control equation)
87B = _____

RTD Based Protection for Models Compatible With the SEL-2600 Series Module

RTD Input Option (EXT, NONE) RTDOPT = _____
(Following Settings are hidden when RTDOPT=NONE)
Temperature Preference Setting (C, F) TMPREF = _____
RTD Location (WDG, BRG, AMB, OTH, NONE) RTD1LOC = _____
RTD Location (WDG, BRG, AMB, OTH, NONE) RTD2LOC = _____
RTD Location (WDG, BRG, AMB, OTH, NONE) RTD3LOC = _____
RTD Location (WDG, BRG, AMB, OTH, NONE) RTD4LOC = _____
RTD Location (WDG, BRG, AMB, OTH, NONE) RTD5LOC = _____
RTD Location (WDG, BRG, AMB, OTH, NONE) RTD6LOC = _____
RTD Location (WDG, BRG, AMB, OTH, NONE) RTD7LOC = _____
RTD Location (WDG, BRG, AMB, OTH, NONE) RTD8LOC = _____
RTD Location (WDG, BRG, AMB, OTH, NONE) RTD9LOC = _____
RTD Location (WDG, BRG, AMB, OTH, NONE) RTD10LOC = _____
RTD Location (WDG, BRG, AMB, OTH, NONE) RTD11LOC = _____
RTD Location (WDG, BRG, AMB, OTH, NONE) RTD12LOC = _____
RTD Type (PT100, NI100, NI120, CU10) RTD1TY = _____
RTD Type (PT100, NI100, NI120, CU10) RTD2TY = _____
RTD Type (PT100, NI100, NI120, CU10) RTD3TY = _____
RTD Type (PT100, NI100, NI120, CU10) RTD4TY = _____
RTD Type (PT100, NI100, NI120, CU10) RTD5TY = _____
RTD Type (PT100, NI100, NI120, CU10) RTD6TY = _____
RTD Type (PT100, NI100, NI120, CU10) RTD7TY = _____
RTD Type (PT100, NI100, NI120, CU10) RTD8TY = _____
RTD Type (PT100, NI100, NI120, CU10) RTD9TY = _____
RTD Type (PT100, NI100, NI120, CU10) RTD10TY = _____
RTD Type (PT100, NI100, NI120, CU10) RTD11TY = _____
RTD Type (PT100, NI100, NI120, CU10) RTD12TY = _____
RTD Trip Temperature (OFF, 32° to 482°F or 0° to 250°C) TRTMP1 = _____
RTD Alarm Temperature (OFF, 32° to 482°F or 0° to 250°C) ALTMP1 = _____
RTD Trip Temperature (OFF, 32° to 482°F or 0° to 250°C) TRTMP2 = _____
RTD Alarm Temperature (OFF, 32° to 482°F or 0° to 250°C) ALTMP2 = _____
RTD Trip Temperature (OFF, 32° to 482°F or 0° to 250°C) TRTMP3 = _____
RTD Alarm Temperature (OFF, 32° to 482°F or 0° to 250°C) ALTMP3 = _____
RTD Trip Temperature (OFF, 32° to 482°F or 0° to 250°C) TRTMP4 = _____
RTD Alarm Temperature (OFF, 32° to 482°F or 0° to 250°C) ALTMP4 = _____
RTD Trip Temperature (OFF, 32° to 482°F or 0° to 250°C) TRTMP5 = _____
RTD Alarm Temperature (OFF, 32° to 482°F or 0° to 250°C) ALTMP5 = _____
RTD Trip Temperature (OFF, 32° to 482°F or 0° to 250°C) TRTMP6 = _____

SETTINGS SHEET FOR THE SEL-300G RELAY

RELAY SETTINGS (SERIAL PORT COMMAND SET AND FRONT PANEL)

RTD Alarm Temperature (OFF, 32° to 482°F or 0° to 250°C)	ALTMP6 =	_____
RTD Trip Temperature (OFF, 32° to 482°F or 0° to 250°C)	TRTMP7 =	_____
RTD Alarm Temperature (OFF, 32° to 482°F or 0° to 250°C)	ALTMP7 =	_____
RTD Trip Temperature (OFF, 32° to 482°F or 0° to 250°C)	TRTMP8 =	_____
RTD Alarm Temperature (OFF, 32° to 482°F or 0° to 250°C)	ALTMP8 =	_____
RTD Trip Temperature (OFF, 32° to 482°F or 0° to 250°C)	TRTMP9 =	_____
RTD Alarm Temperature (OFF, 32° to 482°F or 0° to 250°C)	ALTMP9 =	_____
RTD Trip Temperature (OFF, 32° to 482°F or 0° to 250°C)	TRTMP10 =	_____
RTD Alarm Temperature (OFF, 32° to 482°F or 0° to 250°C)	ALTMP10 =	_____
RTD Trip Temperature (OFF, 32° to 482°F or 0° to 250°C)	TRTMP11 =	_____
RTD Alarm Temperature (OFF, 32° to 482°F or 0° to 250°C)	ALTMP11 =	_____
RTD Trip Temperature (OFF, 32° to 482°F or 0° to 250°C)	TRTMP12 =	_____
RTD Alarm Temperature (OFF, 32° to 482°F or 0° to 250°C)	ALTMP12 =	_____
Enable Winding Trip Voting (Y, N)	EWDGV =	_____
Enable Bearing Trip Voting (Y, N)	EBRGV =	_____
RTD Biasing (AMB, LOAD, NONE) (RTDBIAS=AMB requires one RTDnLOC=AMB)	RTDBIAS =	_____
RTD Bias Differential Temperature (0° to 45°F or 0° to 25°C)	TMPK =	_____
Overload Bias Limit (1.00–2.00 per unit Amps) (Settings TMPK and BLMT are hidden when RTDBIAS ≠ LOAD)	BLMT =	_____

Demand Ammeter

Demand Meter Time Constant (5, 10, 15, 30, 60 min)	DMTC =	_____
Phase Pickup (OFF, 0.50–16.00 A {5 A model}; OFF, 0.10–3.20 A {1 A model})	PDEMP =	_____
Neutral Ground Pickup (OFF, 0.50–16.00 A {5 A model}; OFF, 0.10–3.20 A {1 A model})	NDEMP =	_____
Residual Ground Pickup (OFF, 0.50–16.00 A {5 A model}; OFF, 0.10–3.20 A {1 A model})	GDEMP =	_____
Negative-Sequence Pickup (OFF, 0.50–16.00 A {5 A model}; OFF, 0.10–3.20 A {1 A model})	QDEMP =	_____

Inadvertent Energization Logic

Inadvertent Energization (SELOGIC control equation)
INAD = _____

Inadvertent Energization PU Time (0.00–400.00 s) INADPU = _____

Inadvertent Energization DO Time (0.00–400.00 s) INADDO = _____

SELOGIC Control Equation Variable Timers
(only set those variables and timers enabled by ESV)

SELOGIC Control Equation Variable SV1
SV1 = _____

SV1 Pickup Time (0.00–3000.00 s) SV1PU = _____

SV1 Dropout Time (0.00–3000.00 s) SV1DO = _____

SELOGIC Control Equation Variable SV2
SV2 = _____

SV2 Pickup Time (0.00–3000.00 s) SV2PU = _____

SV2 Dropout Time (0.00–3000.00 s) SV2DO = _____

SELOGIC Control Equation Variable SV3
SV3 = _____

SV3 Pickup Time (0.00–3000.00 s) SV3PU = _____

SV3 Dropout Time (0.00–3000.00 s) SV3DO = _____

SELOGIC Control Equation Variable SV4
SV4 = _____

SV4 Pickup Time (0.00–3000.00 s) SV4PU = _____

SV4 Dropout Time (0.00–3000.00 s) SV4DO = _____

SELOGIC Control Equation Variable SV5
SV5 = _____

SV5 Pickup Time (0.00–3000.00 s) SV5PU = _____

SV5 Dropout Time (0.00–3000.00 s) SV5DO = _____

SELOGIC Control Equation Variable SV6
SV6 = _____

SV6 Pickup Time (0.00–3000.00 s) SV6PU = _____

SV6 Dropout Time (0.00–3000.00 s) SV6DO = _____

SELOGIC Control Equation Variable SV7
SV7 = _____

SV7 Pickup Time (0.00–3000.00 s) SV7PU = _____

SV7 Dropout Time (0.00–3000.00 s) SV7DO = _____

SELOGIC Control Equation Variable SV8
SV8 = _____

SV8 Pickup Time (0.00–3000.00 s) SV8PU = _____

SV8 Dropout Time (0.00–3000.00 s) SV8DO = _____

SETTINGS SHEET FOR THE SEL-300G RELAY

RELAY SETTINGS (SERIAL PORT COMMAND SET AND FRONT PANEL)

SELOGIC Control Equation Variable SV9
SV9 = _____
SV9 Pickup Time (0.00–3000.00 s) SV9PU = _____
SV9 Dropout Time (0.00–3000.00 s) SV9DO = _____
SELOGIC Control Equation Variable SV10
SV10 = _____
SV10 Pickup Time (0.00–3000.00 s) SV10PU = _____
SV10 Dropout Time (0.00–3000.00 s) SV10DO = _____
SELOGIC Control Equation Variable SV11
SV11 = _____
SV11 Pickup Time (0.00–3000.00 s) SV11PU = _____
SV11 Dropout Time (0.00–3000.00 s) SV11DO = _____
SELOGIC Control Equation Variable SV12
SV12 = _____
SV12 Pickup Time (0.00–3000.00 s) SV12PU = _____
SV12 Dropout Time (0.00–3000.00 s) SV12DO = _____
SELOGIC Control Equation Variable SV13
SV13 = _____
SV13 Pickup Time (0.00–3000.00 s) SV13PU = _____
SV13 Dropout Time (0.00–3000.00 s) SV13DO = _____
SELOGIC Control Equation Variable SV14
SV14 = _____
SV14 Pickup Time (0.00–3000.00 s) SV14PU = _____
SV14 Dropout Time (0.00–3000.00 s) SV14DO = _____
SELOGIC Control Equation Variable SV15
SV15 = _____
SV15 Pickup Time (0.00–3000.00 s) SV15PU = _____
SV15 Dropout Time (0.00–3000.00 s) SV15DO = _____
SELOGIC Control Equation Variable SV16
SV16 = _____
SV16 Pickup Time (0.00–3000.00 s) SV16PU = _____
SV16 Dropout Time (0.00–3000.00 s) SV16DO = _____

Latch Bits Set/Reset Equations (only set those variables enabled by ESL)

Set Latch Bit LT1 (SELOGIC control equation)
SET1 = _____
Reset Latch Bit LT1 (SELOGIC control equation)
RST1 = _____
Set Latch Bit LT2 (SELOGIC control equation)
SET2 = _____
Reset Latch Bit LT2 (SELOGIC control equation)
RST2 = _____
Set Latch Bit LT3 (SELOGIC control equation)
SET3 = _____

RELAY SETTINGS (SERIAL PORT COMMAND SET AND FRONT PANEL)

Reset Latch Bit LT3 (SELOGIC control equation)
RST3 = _____
Set Latch Bit LT4 (SELOGIC control equation)
SET4 = _____
Reset Latch Bit LT4 (SELOGIC control equation)
RST4 = _____
Set Latch Bit LT5 (SELOGIC control equation)
SET5 = _____
Reset Latch Bit LT5 (SELOGIC control equation)
RST5 = _____
Set Latch Bit LT6 (SELOGIC control equation)
SET6 = _____
Reset Latch Bit LT6 (SELOGIC control equation)
RST6 = _____
Set Latch Bit LT7 (SELOGIC control equation)
SET7 = _____
Reset Latch Bit LT7 (SELOGIC control equation)
RST7 = _____
Set Latch Bit LT8 (SELOGIC control equation)
SET8 = _____
Reset Latch Bit LT8 (SELOGIC control equation)
RST8 = _____
Set Latch Bit LT9 (SELOGIC control equation)
SET9 = _____
Reset Latch Bit LT9 (SELOGIC control equation)
RST9 = _____
Set Latch Bit LT10 (SELOGIC control equation)
SET10 = _____
Reset Latch Bit LT10 (SELOGIC control equation)
RST10 = _____
Set Latch Bit LT11 (SELOGIC control equation)
SET11 = _____
Reset Latch Bit LT11 (SELOGIC control equation)
RST11 = _____
Set Latch Bit LT12 (SELOGIC control equation)
SET12 = _____
Reset Latch Bit LT12 (SELOGIC control equation)
RST12 = _____
Set Latch Bit LT13 (SELOGIC control equation)
SET13 = _____
Reset Latch Bit LT13 (SELOGIC control equation)
RST13 = _____
Set Latch Bit LT14 (SELOGIC control equation)
SET14 = _____
Reset Latch Bit LT14 (SELOGIC control equation)
RST14 = _____

SETTINGS SHEET FOR THE SEL-300G RELAY

RELAY SETTINGS (SERIAL PORT COMMAND SET AND FRONT PANEL)

Set Latch Bit LT15 (SELOGIC control equation)
SET15 = _____

Reset Latch Bit LT15 (SELOGIC control equation)
RST15 = _____

Set Latch Bit LT16 (SELOGIC control equation)
SET16 = _____

Reset Latch Bit LT16 (SELOGIC control equation)
RST16 = _____

TRIP, CLOSE, ER, OUTPUT Elements

Minimum Trip Duration Time (0.00–400.00 s) TDURD = _____

Trip Equation 1 (SELOGIC control equation)
TR1 = _____

Unlatch Trip Equation 1 (SELOGIC control equation)
ULTR1 = _____

Trip Equation 2 (SELOGIC control equation)
TR2 = _____

Unlatch Trip Equation 2 (SELOGIC control equation)
ULTR2 = _____

Trip Equation 3 (SELOGIC control equation)
TR3 = _____

Unlatch Trip Equation 3 (SELOGIC control equation)
ULTR3 = _____

Trip Equation 4 (SELOGIC control equation)
TR4 = _____

Unlatch Trip Equation 4 (SELOGIC control equation)
ULTR4 = _____

Close Enable Equation (SELOGIC control equation)
CLEN = _____

Close Initiate Equation (SELOGIC control equation)
CL = _____

Unlatch Close Equation
ULCL = _____

Close Dwell Timer (0.00–1.00 s)
CLSD = _____

Event Trigger Equation
ER = _____

Output Contact Equations

Output Contact OUT101 (SELOGIC control equation)
OUT101 = _____

Output Contact OUT102 (SELOGIC control equation)
OUT102 = _____

Output Contact OUT103 (SELOGIC control equation)
OUT103 = _____

Output Contact OUT104 (SELOGIC control equation)
OUT104 = _____

Output Contact OUT105 (SELOGIC control equation)
OUT105 = _____

Output Contact OUT106 (SELOGIC control equation)
OUT106 = _____

Output Contact OUT107 (SELOGIC control equation)
OUT107 = _____

Output Contact Equations for Model 0300G_1-extra I/O board

Output Contact OUT201 (SELOGIC control equation)
OUT201 = _____

Output Contact OUT202 (SELOGIC control equation)
OUT202 = _____

Output Contact OUT203 (SELOGIC control equation)
OUT203 = _____

Output Contact OUT204 (SELOGIC control equation)
OUT204 = _____

Output Contact OUT205 (SELOGIC control equation)
OUT205 = _____

Output Contact OUT206 (SELOGIC control equation)
OUT206 = _____

Output Contact OUT207 (SELOGIC control equation)
OUT207 = _____

Output Contact OUT208 (SELOGIC control equation)
OUT208 = _____

Output Contact OUT209 (SELOGIC control equation)
OUT209 = _____

Output Contact OUT210 (SELOGIC control equation)
OUT210 = _____

Output Contact OUT211 (SELOGIC control equation)
OUT211 = _____

Output Contact OUT212 (SELOGIC control equation)
OUT212 = _____

Date _____

SETTINGS SHEET FOR THE SEL-300G RELAY

GLOBAL SETTINGS (SERIAL PORT COMMAND SET G AND FRONT PANEL)

Event Report Parameters

Length of Event Report (15, 30, 60, 180 cycles {firmware R320 and higher}; 15, 30 cycles {firmware <R320}) LER = _____

Length of Prefault in Event Report (1 through LER-1 cycles) PRE = _____

Front-Panel Display Time-Out

Front-Panel Display Time-Out (OFF, 0–30 min) FP_TO = _____

Date Format

Date Format (MDY, YMD) DATE_F = _____

Station DC Battery Monitor

DC Battery Instantaneous Undervoltage Pickup (OFF, 20–300 Vdc) DCLOP = _____

DC Battery Instantaneous Overvoltage Pickup (OFF, 20–300 Vdc) DCHIP = _____

Power System Configuration

Nominal Frequency (50 Hz, 60 Hz) FNOM = _____

Phase Potential Transformer Connection (D, Y) DELTA_Y = _____

Settings Group Change Delay

Group Change Delay (0–400 s) TGR = _____

Group 1 Select Input (SELOGIC control equation)

SS1 = _____

Group 2 Select Input (SELOGIC control equation)

SS2 = _____

Breaker Monitor Settings

Breaker Monitor Input (SELOGIC control equation)

BKMON = _____

Close/Open Set Point 1–max. (1–65000 operations) COSP1 = _____

Close/Open Set Point 2–mid. (1–65000 operations) COSP2 = _____

Close/Open Set Point 3–min. (1–65000 operations) COSP3 = _____

kA Interrupted Set Point 1–min. (0.1–999.0 kA primary) KASP1 = _____

kA Interrupted Set Point 2–mid. (0.1–999.0 kA primary) KASP2 = _____

kA Interrupted Set Point 3–max. (0.1–999.0 kA primary) KASP3 = _____

Optoisolated Input Timers

Input Debounce Time (0.00–1.00 cycle in 0.25-cycle steps) IN101D = _____

Input Debounce Time (0.00–1.00 cycle in 0.25-cycle steps) IN102D = _____

Input Debounce Time (0.00–1.00 cycle in 0.25-cycle steps) IN103D = _____

Input Debounce Time (0.00–1.00 cycle in 0.25-cycle steps) IN104D = _____

Input Debounce Time (0.00–1.00 cycle in 0.25-cycle steps) IN105D = _____

Input Debounce Time (0.00–1.00 cycle in 0.25-cycle steps) IN106D = _____

Optoisolated Input Timers for Model 0300G_1

Input IN201 Debounce Time (0.00–1.00 cycles in 0.25-cycle steps)	IN201D = _____
Input IN202 Debounce Time (0.00–1.00 cycles in 0.25-cycle steps)	IN202D = _____
Input IN203 Debounce Time (0.00–1.00 cycles in 0.25-cycle steps)	IN203D = _____
Input IN204 Debounce Time (0.00–1.00 cycles in 0.25-cycle steps)	IN204D = _____
Input IN205 Debounce Time (0.00–1.00 cycles in 0.25-cycle steps)	IN205D = _____
Input IN206 Debounce Time (0.00–1.00 cycles in 0.25-cycle steps)	IN206D = _____
Input IN207 Debounce Time (0.00–1.00 cycles in 0.25-cycle steps)	IN207D = _____
Input IN208 Debounce Time (0.00–1.00 cycles in 0.25-cycle steps)	IN208D = _____

Local Bit Labels

Enter the following characters:0–9, A–Z, -, /, ., space
for each text label setting, subject to the specified character limit. Enter NA to null a label.

Local Bit LB1 Name (14 characters)	NLB1 = _____
Clear Local Bit LB1 Label (7 characters) (setting hidden if NLB1 = NA)	CLB1 = _____
Set Local Bit LB1 Label (7 characters) (setting hidden if NLB1 = NA)	SLB1 = _____
Pulse Local Bit LB1 Label (7 characters) (setting hidden if NLB1 = NA)	PLB1 = _____
Local Bit LB2 Name (14 characters)	NLB2 = _____
Clear Local Bit LB2 Label (7 characters) (setting hidden if NLB2 = NA)	CLB2 = _____
Set Local Bit LB2 Label (7 characters) (setting hidden if NLB2 = NA)	SLB2 = _____
Pulse Local Bit LB2 Label (7 characters) (setting hidden if NLB2 = NA)	PLB2 = _____
Local Bit LB3 Name (14 characters)	NLB3 = _____
Clear Local Bit LB3 Label (7 characters) (setting hidden if NLB3 = NA)	CLB3 = _____
Set Local Bit LB3 Label (7 characters) (setting hidden if NLB3 = NA)	SLB3 = _____
Pulse Local Bit LB3 Label (7 characters) (setting hidden if NLB3 = NA)	PLB3 = _____
Local Bit LB4 Name (14 characters)	NLB4 = _____
Clear Local Bit LB4 Label (7 characters) (setting hidden if NLB4 = NA)	CLB4 = _____
Set Local Bit LB4 Label (7 characters) (setting hidden if NLB4 = NA)	SLB4 = _____
Pulse Local Bit LB4 Label (7 characters) (setting hidden if NLB4 = NA)	PLB4 = _____

Date _____

SETTINGS SHEET FOR THE SEL-300G RELAY

GLOBAL SETTINGS (SERIAL PORT COMMAND SET G AND FRONT PANEL)

Local Bit LB5 Name (14 characters)	NLB5 = _____
Clear Local Bit LB5 Label (7 characters) (setting hidden if NLB5 = NA)	CLB5 = _____
Set Local Bit LB5 Label (7 characters) (setting hidden if NLB5 = NA)	SLB5 = _____
Pulse Local Bit LB5 Label (7 characters) (setting hidden if NLB5 = NA)	PLB5 = _____
Local Bit LB6 Name (14 characters)	NLB6 = _____
Clear Local Bit LB6 Label (7 characters) (setting hidden if NLB6 = NA)	CLB6 = _____
Set Local Bit LB6 Label (7 characters) (setting hidden if NLB6 = NA)	SLB6 = _____
Pulse Local Bit LB6 Label (7 characters) (setting hidden if NLB6 = NA)	PLB6 = _____
Local Bit LB7 Name (14 characters)	NLB7 = _____
Clear Local Bit LB7 Label (7 characters) (setting hidden if NLB7 = NA)	CLB7 = _____
Set Local Bit LB7 Label (7 characters) (setting hidden if NLB7 = NA)	SLB7 = _____
Pulse Local Bit LB7 Label (7 characters) (setting hidden if NLB7 = NA)	PLB7 = _____
Local Bit LB8 Name (14 characters)	NLB8 = _____
Clear Local Bit LB8 Label (7 characters) (setting hidden if NLB8 = NA)	CLB8 = _____
Set Local Bit LB8 Label (7 characters) (setting hidden if NLB8 = NA)	SLB8 = _____
Pulse Local Bit LB8 Label (7 characters) (setting hidden if NLB8 = NA)	PLB8 = _____
Local Bit LB9 Name (14 characters)	NLB9 = _____
Clear Local Bit LB9 Label (7 characters) (setting hidden if NLB9 = NA)	CLB9 = _____
Set Local Bit LB9 Label (7 characters) (setting hidden if NLB9 = NA)	SLB9 = _____
Pulse Local Bit LB9 Label (7 characters) (setting hidden if NLB9 = NA)	PLB9 = _____
Local Bit LB10 Name (14 characters)	NLB10 = _____
Clear Local Bit LB10 Label (7 characters) (setting hidden if NLB10 = NA)	CLB10 = _____
Set Local Bit LB10 Label (7 characters) (setting hidden if NLB10 = NA)	SLB10 = _____
Pulse Local Bit LB10 Label (7 characters) (setting hidden if NLB10 = NA)	PLB10 = _____

GLOBAL SETTINGS (SERIAL PORT COMMAND SET G AND FRONT PANEL)

Local Bit LB11 Name (14 characters)	NLB11 = _____
Clear Local Bit LB11 Label (7 characters) (setting hidden if NLB11 = NA)	CLB11 = _____
Set Local Bit LB11 Label (7 characters) (setting hidden if NLB11 = NA)	SLB11 = _____
Pulse Local Bit LB11 Label (7 characters) (setting hidden if NLB11 = NA)	PLB11 = _____
Local Bit LB12 Name (14 characters)	NLB12 = _____
Clear Local Bit LB12 Label (7 characters) (setting hidden if NLB12 = NA)	CLB12 = _____
Set Local Bit LB12 Label (7 characters) (setting hidden if NLB12 = NA)	SLB12 = _____
Pulse Local Bit LB12 Label (7 characters) (setting hidden if NLB12 = NA)	PLB12 = _____
Local Bit LB13 Name (14 characters)	NLB13 = _____
Clear Local Bit LB13 Label (7 characters) (setting hidden if NLB13 = NA)	CLB13 = _____
Set Local Bit LB13 Label (7 characters) (setting hidden if NLB13 = NA)	SLB13 = _____
Pulse Local Bit LB13 Label (7 characters) (setting hidden if NLB13 = NA)	PLB13 = _____
Local Bit LB14 Name (14 characters)	NLB14 = _____
Clear Local Bit LB14 Label (7 characters) (setting hidden if NLB14 = NA)	CLB14 = _____
Set Local Bit LB14 Label (7 characters) (setting hidden if NLB14 = NA)	SLB14 = _____
Pulse Local Bit LB14 Label (7 characters) (setting hidden if NLB14 = NA)	PLB14 = _____
Local Bit LB15 Name (14 characters)	NLB15 = _____
Clear Local Bit LB15 Label (7 characters) (setting hidden if NLB15 = NA)	CLB15 = _____
Set Local Bit LB15 Label (7 characters) (setting hidden if NLB15 = NA)	SLB15 = _____
Pulse Local Bit LB15 Label (7 characters) (setting hidden if NLB15 = NA)	PLB15 = _____
Local Bit LB16 Name (14 characters)	NLB16 = _____
Clear Local Bit LB16 Label (7 characters) (setting hidden if NLB16 = NA)	CLB16 = _____
Set Local Bit LB16 Label (7 characters) (setting hidden if NLB16 = NA)	SLB16 = _____
Pulse Local Bit LB16 Label (7 characters) (setting hidden if NLB16 = NA)	PLB16 = _____

SETTINGS SHEET FOR THE SEL-300G RELAY

Front-Panel Display

Front-Panel Current Display (Y, N) FP_I = _____
Front-Panel Phase-to-Phase Voltage Display (Y, N) FP_VPP = _____
Front-Panel Phase Voltage Display (Y, N)
(hidden when DELTA_Y = D) FP_VP = _____
Front-Panel Power Display (Y, N) FP_MW = _____
Front-Panel Frequency Display (Y, N) FP_FR = _____
Front-Panel Current Differential Display (Y, N) FP_87 = _____
Front-Panel Field Insulation Rf Display (Y, N) FP_RF = _____
Front-Panel RTD Temperature Display (Y, N) FP_RTD = _____

Display Points

Display Point DP1 (SELOGIC control equation)
DP1 = _____
Display if DP1 = logical 1 (16 characters) DP1_1 = _____
Display if DP1 = logical 0 (16 characters) DP1_0 = _____
Display Point DP2 (SELOGIC control equation)
DP2 = _____
Display if DP2 = logical 1 (16 characters) DP2_1 = _____
Display if DP2 = logical 0 (16 characters) DP2_0 = _____
Display Point DP3 (SELOGIC control equation)
DP3 = _____
Display if DP3 = logical 1 (16 characters) DP3_1 = _____
Display if DP3 = logical 0 (16 characters) DP3_0 = _____
Display Point DP4 (SELOGIC control equation)
DP4 = _____
Display if DP4 = logical 1 (16 characters) DP4_1 = _____
Display if DP4 = logical 0 (16 characters) DP4_0 = _____
Display Point DP5 (SELOGIC control equation)
DP5 = _____
Display if DP5 = logical 1 (16 characters) DP5_1 = _____
Display if DP5 = logical 0 (16 characters) DP5_0 = _____
Display Point DP6 (SELOGIC control equation)
DP6 = _____
Display if DP6 = logical 1 (16 characters) DP6_1 = _____
Display if DP6 = logical 0 (16 characters) DP6_0 = _____
Display Point DP7 (SELOGIC control equation)
DP7 = _____
Display if DP7 = logical 1 (16 characters) DP7_1 = _____
Display if DP7 = logical 0 (16 characters) DP7_0 = _____
Display Point DP8 (SELOGIC control equation)
DP8 = _____
Display if DP8 = logical 1 (16 characters) DP8_1 = _____
Display if DP8 = logical 0 (16 characters) DP8_0 = _____

GLOBAL SETTINGS (SERIAL PORT COMMAND SET G AND FRONT PANEL)

Display Point DP9 (SELOGIC control equation)
DP9 = _____
Display if DP9 = logical 1 (16 characters) DP9_1 = _____
Display if DP9 = logical 0 (16 characters) DP9_0 = _____
Display Point DP10 (SELOGIC control equation)
DP10 = _____
Display if DP10 = logical 1 (16 characters) DP10_1 = _____
Display if DP10 = logical 0 (16 characters) DP10_0 = _____
Display Point DP11 (SELOGIC control equation)
DP11 =
Display if DP11 = logical 1 (16 characters) DP11_1 = _____
Display if DP11 = logical 0 (16 characters) DP11_0 = _____
Display Point DP12 (SELOGIC control equation)
DP12 = _____
Display if DP12 = logical 1 (16 characters) DP12_1 = _____
Display if DP12 = logical 0 (16 characters) DP12_0 = _____
Display Point DP13 (SELOGIC control equation)
DP13 = _____
Display if DP13 = logical 1 (16 characters) DP13_1 = _____
Display if DP13 = logical 0 (16 characters) DP13_0 = _____
Display Point DP14 (SELOGIC control equation)
DP14 = _____
Display if DP14 = logical 1 (16 characters) DP14_1 = _____
Display if DP14 = logical 0 (16 characters) DP14_0 = _____
Display Point DP15 (SELOGIC control equation)
DP15 = _____
Display if DP15 = logical 1 (16 characters) DP15_1 = _____
Display if DP15 = logical 0 (16 characters) DP15_0 = _____
Display Point DP16 (SELOGIC control equation)
DP16 = _____
Display if DP16 = logical 1 (16 characters) DP16_1 = _____
Display if DP16 = logical 0 (16 characters) DP16_0 = _____

Date _____

SETTINGS SHEET FOR THE SEL-300G RELAY

SEQUENTIAL EVENTS RECORDER SETTINGS (SERIAL PORT COMMAND SET R)

Sequential Events Recorder settings are comprised of three trigger lists. Each trigger list can include up to 24 Relay Word bits delimited by spaces or commas. See *Sequential Events Recorder (SER) Report* in *Section 11: Event Reports and SER Functions*.

SER Trigger List 1 SER1 = _____

SER Trigger List 2 SER2 = _____

SER Trigger List 3 SER3 = _____

SER Trigger List 4 SER4 = _____

Relay Word Bit Aliases (ALIAS# > EALIAS setting are hidden)

(See ***Alias Settings*** in ***Section 3: Auxiliary Function Settings***.)

Enable ALIAS Settings (0, 10, 20, 30, 40) EALIAS = _____

ALIAS1 = _____

ALIAS2 = _____

ALIAS3 = _____

ALIAS4 = _____

ALIAS5 = _____

ALIAS6 = _____

ALIAS7 = _____

ALIAS8 = _____

ALIAS9 = _____

ALIAS10 = _____

ALIAS11 = _____

ALIAS12 = _____

ALIAS13 = _____

ALIAS14 = _____

ALIAS15 = _____

ALIAS16 = _____

ALIAS17 = _____

ALIAS18 = _____

ALIAS19 = _____

SEQUENTIAL EVENTS RECORDER SETTINGS (SERIAL PORT COMMAND SET R)

ALIAS20 = _____

ALIAS21 = _____

ALIAS22 = _____

ALIAS23 = _____

ALIAS24 = _____

ALIAS25 = _____

ALIAS26 = _____

ALIAS27 = _____

ALIAS28 = _____

ALIAS29 = _____

ALIAS30 = _____

ALIAS31 = _____

ALIAS32 = _____

ALIAS33 = _____

ALIAS34 = _____

ALIAS35 = _____

ALIAS36 = _____

ALIAS37 = _____

ALIAS38 = _____

ALIAS39 = _____

ALIAS40 = _____

Date _____

SETTINGS SHEET FOR THE SEL-300G RELAY

PORT SETTINGS (SERIAL PORT COMMAND SET P AND FRONT PANEL)

Protocol Settings

Protocol (SEL, LMD, MOD {Standard plus Modbus® Models}; SEL, LMD {Standard Models})	PROTO = _____
LMD Prefix (@, #, $, %, &) (hidden when PROTO ≠ LMD)	PREFIX = _____
LMD Address (01–99) (hidden when PROTO ≠ LMD)	ADDR = _____
LMD Settling Time (0–30 seconds) (hidden when PROTO ≠ LMD)	SETTLE = _____
Enable Hardware Handshaking[1] (Y, N, H {when PROTO = MOD}; Y, N {when PROTO = SEL}) (hidden when PROTO = LMD)	RTSCTS = _____
Modbus Slave ID (1–247) (hidden when PROTO ≠ MOD)	SLAVEID = _____

Protocol Settings: Refer to ***Section 10: Serial Port Communications and Commands*** for details.

Communications Settings

Baud Rate (300, 1200, 2400, 4800, 9600, 19200, 38400)	SPEED = _____

Note: The highest baud rate for Modbus RTU protocol is 19200.

Data Bits (7, 8)	BITS = _____
Parity (0, E, N) {Odd, Even, None}	PARITY = _____
Stop Bits (1, 2)	STOP = _____

Other Port Settings

Time-Out (0–30 minutes)	T_OUT = _____
Send Auto Messages to Port (Y, N)	AUTO = _____
Fast Operate Enable (Y, N)	FASTOP = _____

Other Port Settings. Set T_OUT to the number of minutes of serial port inactivity for an automatic log out. Set T_OUT = 0 for no port time-out. If the event report length setting LER = 180 cycles, set the port time-out setting T_OUT > 2 minutes.
Set AUTO = Y to allow automatic messages at the serial port. Set RTSCTS = Y to enable hardware handshaking. With RTSCTS = Y, the relay will not send characters until the CTS input is asserted. Also, if the relay is unable to receive characters, it deasserts the RTS line.
Set FASTOP = Y to enable binary *Fast Operate* messages at the serial port. Set FASTOP = N to block binary *Fast Operate* messages. Refer to ***Appendix D: Configuration, Fast Meter, and Fast Operate Commands*** for the description of the SEL-300G Relay *Fast Operate* commands.

[1] RTSCTS setting is hidden for Port 1 (EIA-485) and the default value is N.

TABLE OF CONTENTS

SECTION 7: RELAY COMMISSIONING 7-1

Introduction 7-1
Commissioning Testing Philosophy 7-1
Testing Methods and Tools 7-1
Test Features Provided by the Relay 7-1
Low-Level Test Interface 7-2
Test Methods 7-3
Relay Commissioning Procedure 7-5
Introduction 7-5
Required Equipment 7-5
Commissioning Procedure 7-7
Protection Element Tests 7-18
Introduction 7-18
Three Voltage Source and Three Current Source Connections 7-18
Distance (21) Element 7-19
Volts/Hertz (24) Element 7-25
Synchronism Checking (25) Function 7-37
Undervoltage (27) Elements 7-46
Reverse/Low-Forward Power (32) Element 7-48
Loss-of-Field (40) Element 7-54
Negative-Sequence Overcurrent (46) Element 7-62
Overcurrent (50/51) Elements 7-67
Voltage Controlled Time-Overcurrent (51C) Element 7-70
Voltage Restrained Time-Overcurrent (51V) Element 7-74
Overvoltage (59) Elements 7-79
100% Stator Ground (64) Element 7-81
Out-of-Step (78) Element—Single Blinder 7-89
Out-of-Step (78) Element—Double Blinder 7-94
Over/underfrequency (81) Elements 7-95
Ground Differential (87N) Element 7-98
Current Differential (87) Elements 7-102
Differential Element Commissioning Worksheet 7-111
Check List 7-112

TABLES

Table 7.1: Communication Cables to Connect the SEL-300G Relay to Other Devices 7-10
Table 7.2: SET Command Editing Keystrokes 7-13
Table 7.3: SEL-300G Relay Contact I/O Viewed by the TAR Command 7-15
Table 7.4: Serial Port Commands That Clear Relay Data Buffers 7-18
Table 7.5: Relay Word Row 39 Shows Relay Word Bits for Distance Elements 7-23
Table 7.6: Relay Word Row 2 Shows Relay Word Bits for Volts/Hertz Elements 7-27
Table 7.7: Synch-Check Element Test Voltage Phase Angles 7-39
Table 7.8: Relay Word Row 36 Shows Relay Word Bits for Synch-Check Elements 7-43
Table 7.9: Relay Word Row 37 Shows Relay Word Bits for Slip Frequency Elements 7-44

Table 7.10: Relay Word Row 36 Shows Relay Word Bits for Angle Elements 7-45
Table 7.11: Reverse Power Element Test Signal Summary 7-50
Table 7.12: Relay Word Row 4 Shows Relay Word Bits for Reverse/Low-Forward Power Elements 7-51
Table 7.13: Relay Word Row 5 Shows Relay Word Bits for Loss-of-Field Elements 7-58
Table 7.14: Relay Word Row 6 Shows Relay Word Bits for Negative-Sequence Overcurrent Elements 7-64
Table 7.15: Relay Word Row 7 Shows Relay Word Bits for Voltage Controlled Time-Overcurrent Elements 7-72
Table 7.16: Relay Word Row 9 Shows Relay Word Bits for the Voltage Restrained Time-Overcurrent Elements 7-76
Table 7.17: Relay Word Row 12 Shows Relay Word Bits for 64G Elements 7-83
Table 7.18: Relay Word Row 14 Shows Relay Word Bits for Frequency Elements 7-97
Table 7.19: Relay Word Row 38 Shows Relay Word Bits for Ground Differential Elements 7-101
Table 7.20: Test Current Adjustment Factors For Testing 7-104
Table 7.21: Relay Word Row 34 Shows Relay Word Bits for 87U Elements 7-104
Table 7.22: Relay Word Row 33 Shows Relay Word Bits for 87R Elements 7-106

FIGURES

Figure 7.1: Low-Level Test Interface, 0300G0 7-3
Figure 7.2: Low-Level Test Interface, 0300G1 7-3
Figure 7.3: Low-Level Test Interface, 0300G2 7-3
Figure 7.4: Low-Level Test Interface, 0300G3 7-3
Figure 7.5: Relay Commissioning Flowchart (refer to text for detailed instructions) 7-7
Figure 7.6: DC Supply Polarity, Continuity Checks 7-8
Figure 7.7: Three-Phase AC Connection Test Voltage Signals 7-14
Figure 7.8: Open-Delta AC Potential Connection Test Voltage Signals 7-14
Figure 7.9: Three Voltage Source and Three Current Source Test Connections 7-19
Figure 7.10: Two Voltage Source and Three Current Source Test Connections 7-19
Figure 7.11: Generator Voltage and Current Relationships During a System Phase-to-Phase Fault 7-20
Figure 7.12: Generator Voltage and Current Relationships During a System Three-Phase Fault 7-21
Figure 7.13: 24C2 Time-Delay Test Points, 24CCS = DD 7-29
Figure 7.14: 24C2 Time-Delay Test Points, 24CCS = I 7-32
Figure 7.15: 24C2 Time-Delay Test Points, 24CCS = ID 7-34
Figure 7.16: 32Pn Element Operate Region Depends on the Sign of the 32Pn Setting 7-50
Figure 7.17: Loss-of-Field Element Diameter and Offset Tests, 40XD2 < 0 7-56
Figure 7.18: Loss-of-Field Element Diameter Test, 40XDn > 0 7-57
Figure 7.19: Loss-of-Field Element Off-Diameter Test, 40XDn < 0 7-60
Figure 7.20: Single Current Source Test Connection 7-62
Figure 7.21: 46Q2 Inverse-Time Element Test 7-66
Figure 7.22: Three Voltage Sources and One Current Source Test Connections (DELTA_Y = Y) 7-70
Figure 7.23: Two Voltage Sources and One Current Source Test Connections (DELTA_Y = D) 7-71
Figure 7.24: One Voltage Source Test Connection (DELTA_Y = Y) 7-79
Figure 7.25: One Voltage Source Test Connection (DELTA_Y = D) 7-80
Figure 7.26: Neutral Voltage Test Connection, 64G1 7-82
Figure 7.27: 64G2 Element Test Connections, 64RAT ≠ 0 7-84
Figure 7.28: 64G2 Element Test Connections, 64RAT = 0 (DELTA_Y = D) 7-87
Figure 7.29: Out-of-Step Single Blinder Element, Diameter and Blinder Tests 7-91

Figure 7.30: Out-of-Step Double Blinder Element, Diameter and Blinder Tests 7-95
Figure 7.31: 87N Test Connections 7-99
Figure 7.32: Percentage Restraint Differential Characteristic 7-103
Figure 7.33: Test Connections for Parallel Current Sources 7-110

SECTION 7: RELAY COMMISSIONING

INTRODUCTION

This section provides guidelines for commissioning and testing the SEL-300G Relay. Included are discussions on testing philosophies, methods, and tools, plus detailed test procedures for selected protection functions.

COMMISSIONING TESTING PHILOSOPHY

Commissioning testing is performed when a protective relay is installed to:

a) Ensure that all system ac and dc connections are correct.

b) Ensure that the relay functions as intended using your settings.

c) Ensure that all auxiliary equipment operates as intended.

To satisfy these requirements, check all connected or monitored inputs and outputs, verify polarity and phase rotation of ac connections, and perform a simple check of protection elements.

SEL performs a complete functional check and calibration of each relay before it is shipped. This helps ensure that you receive a relay that operates correctly and accurately. Commissioning tests should verify that the relay is properly connected to the power system and all auxiliary equipment. Verify control signal inputs and outputs. Check breaker auxiliary inputs, SCADA control inputs, and monitoring outputs. Use an ac connection check to verify that the relay current and voltage inputs are of the proper magnitude and phase rotation.

Brief fault tests ensure that the relay settings are correct. It is not necessary to test every relay element, timer, and function in these tests.

At commissioning time, use the relay **METER** command to verify the ac current and voltage magnitude and phase rotation. Use the **PULSE** command to verify relay output contact operation. Use the **TARGET** command to verify optoisolated input operation.

TESTING METHODS AND TOOLS

Test Features Provided by the Relay

The following features assist you during relay testing.

METER Command — The **METER** command shows the ac currents and voltages (magnitude and phase angle) presented to the relay in primary values. In addition, the command shows power system frequency (FREQ) and the voltage input to the relay power supply terminals (VDC). Compare these quantities against other devices of known accuracy. The **METER** command is available at the serial ports and front-panel display. See ***Section 9: Front-Panel Operation*** and ***Section 10: Serial Port Communications and Commands***.

EVENT Command — The relay generates a 15- or 30-cycle event report in response to faults or disturbances. Each report contains current and voltage information, relay element states, and input/output contact information. If you question the relay response or your test method, use the event report for more information. The **EVENT** command is available at the serial ports. See ***Section 11: Event Reports and SER Functions***.

SER Command — The relay provides a Sequential Events Recorder (SER) event report that time-tags changes in relay element and input/output contact states. The SER provides a convenient means to verify the pickup/dropout of any element in the relay. The **SER** command is available at the serial ports. See ***Section 11: Event Reports and SER Functions***.

TARGET Command — Use the **TARGET** command to view the state of relay control inputs, relay outputs, and relay elements during a test. The **TARGET** command is available at the serial ports and the front panel. See ***Section 10: Serial Port Communications and Commands*** and ***Section 9: Front-Panel Operation.***

PULSE Command — Use the **PULSE** command to test the contact output circuits. The **PULSE** command is available at the serial ports and the front panel. See ***Section 10: Serial Port Communications and Commands*** and ***Section 9: Front-Panel Operation***.

Low-Level Test Interface

The SEL-300G has a low-level test interface between the calibrated input module and the separately calibrated processing module. You may test the relay in either of two ways: conventionally, by applying ac current and voltage signals to the relay inputs or by applying low magnitude ac voltage signals to the low-level test interface. Access the test interface by removing the relay front panel.

Figure 7.1 through Figure 7.4 show the low-level interface connections. Remove the ribbon cable between the two modules to access the outputs of the input module and the inputs to the processing module (relay main board).

You can test the relay-processing module using signals from the SEL-RTS Low-Level Relay Test System. Never apply voltage signals greater than 9 volts peak-to-peak to the low-level test interface. Figure 7.1 through Figure 7.4 show the signal scaling factors.

CAUTION

The relay contains devices sensitive to Electrostatic Discharge (ESD). When working on the relay with front or top cover removed, work surfaces and personnel must be properly grounded or equipment damage may result.

You can test the input module two different ways:

1. Measure the outputs from the input module with an accurate voltmeter (measure signal pin to GND pin), and compare the readings to accurate instruments in the relay input circuits, or
2. Replace the ribbon cable, press the front-panel **<METER>** button, and compare the relay readings to other accurate instruments in the relay input circuits.

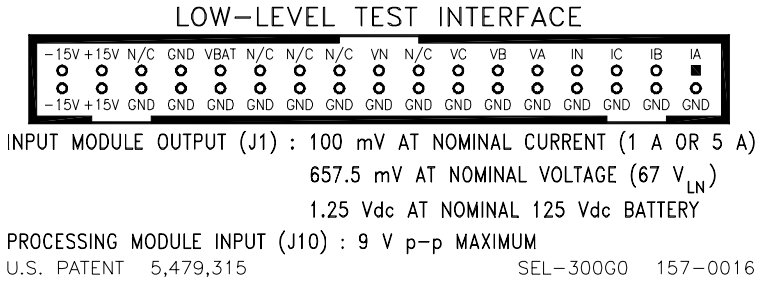

Figure 7.1: Low-Level Test Interface, 0300G0

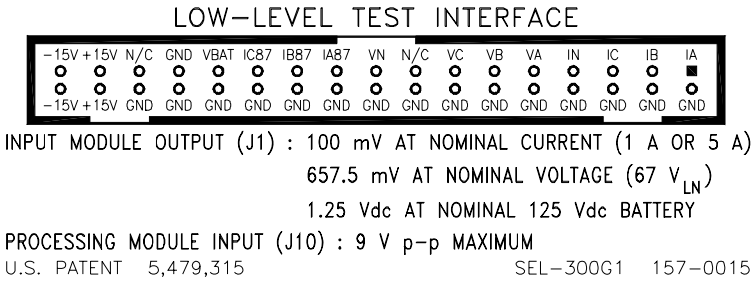

Figure 7.2: Low-Level Test Interface, 0300G1

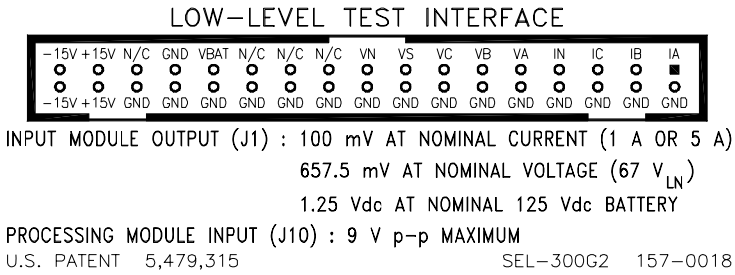

Figure 7.3: Low-Level Test Interface, 0300G2

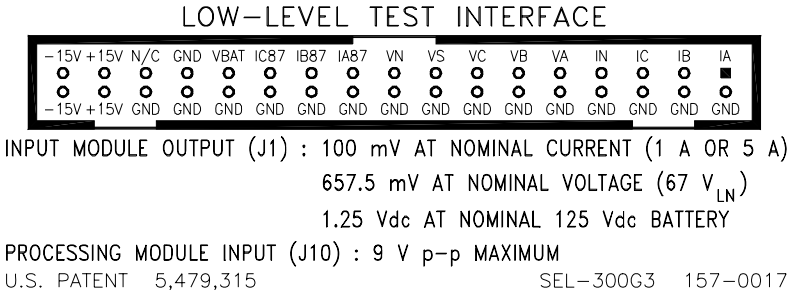

Figure 7.4: Low-Level Test Interface, 0300G3

Test Methods

Test the pickup and dropout of relay elements using one of three methods: target command indication, output contact closure, or Sequential Events Recorder (SER).

The examples below show the settings necessary to route the phase time-overcurrent element 51PT to the output contacts and the SER. The 51PT element, like many in the SEL-300G, is

controlled by enable settings and/or torque-control settings. To enable the 51PT element, set the E51 enable setting and 51PTC torque-control setting to the following:

E51 = Y (via the **SET** command)

51PTC = 1 (set directly to logical 1, via the **SET** command)

Testing Via Front-Panel Indicators

Display the state of relay elements, inputs, and outputs using the front-panel or serial port **TAR** commands. Use this method to verify the pickup settings of protection elements.

Access the front-panel **TAR** command from the front-panel OTHER pushbutton menu. To display the state of the 51PT element on the front-panel display, press the OTHER pushbutton, cursor to the TAR option, and press SELECT. Press the Down arrow pushbutton until TAR 7 is displayed on the top row of the LCD. The bottom row of the LCD displays all elements asserted in Relay Word Row 7. The relay maps the state of the elements in Relay Word Row 7 on the bottom row of LEDs. The 51PT element state is reflected on the LED labeled 32. See Table 4.6 for the correspondence between the Relay Word elements and the **TAR** command.

To view the 51PT element status from the serial port, issue the **TAR 51PT** command. The relay will display the state of all elements in the Relay Word row containing the 51PT element.

Review **TAR** command descriptions in ***Section 10: Serial Port Communications and Commands*** and ***Section 9: Front-Panel Operation*** for further details on displaying element status via the TAR commands.

Testing Via Output Contacts

You can set the relay to operate an output contact for testing a single element. Use the **SET** command to set an output contact to close when the element under test asserts. The available elements are the Relay Word bits referenced in Table 4.6.

This method is useful for testing inverse-time elements like the 24C2T, 46Q2T, and 51VT elements.

For instance, the Access Level 2 command sequence below causes the relay to close output contact OUT106 when the 24C2T element asserts:

```
=>>SET OUT106 TERSE <Enter>
Group 1


TRIP, ER, OUTPUT ELEMENTS
Output Control (Selogic Equation)
OUT106  =0

 ? 24C2T <Enter>
Output Control (Selogic Equation)
OUT107  =0

 ? END <Enter>
Save Changes(Y/N)? Y <Enter>
Settings saved
=>>
```

Do not forget to reenter the correct relay settings when you are ready to place the relay in service.

Testing Via Sequential Events Recorder

The relay SER function reports the time of assertion and deassertion of monitored relay elements. You can use the recorded times to determine that elements operated with correct time delays.

To use this method, include the instantaneous and time-delayed Relay Word bits for the element under test in one of the SER triggering settings, SER1–SER4 using the **SET R** command. For instance:

SER4 = 24D1 24D1T

ensures that the SER function records the times of all assertions and deassertions of the instantaneous element 24D1 and the time-delayed element 24D1T. It is not required that these two Relay Word bits reside in the same SER*n* setting, nor is it necessary that they be alone in the SER*n* setting.

Following the test, simply execute the serial port **SER** command to review the sequential events record. The relay will have recorded the assertion time of the 24D1 Relay Word bit, then later the assertion time of the 24D1T Relay Word bit. Subtract the 24D1 assertion time from the 24D1T assertion time to calculate the operate time of the delayed Relay Word bit.

Use this method to verify timing associated with time-overcurrent elements, definite-time delays, etc. Do not forget to reenter the correct relay settings when you are ready to place the relay in service.

See ***Section 11: Event Reports and SER Functions*** for more information regarding the **SER** function and associated serial port commands.

RELAY COMMISSIONING PROCEDURE

Introduction

The procedure below is intended to help you enter settings into an SEL-300G Relay and verify that the SEL-300G is properly connected. Steps later in the procedure call for operation of the protected generator at no load, light load, and full load to verify ac connections and take measurements for calculation of 100 percent stator ground fault protection elements.

CAUTION Be sure to follow the generator and prime mover manufacturers' guidelines with respect to generator operation and commissioning.

This procedure is intended for use at initial relay installation and should not need to be repeated in the life of the relay unless major changes are made to the relay electrical connections.

This procedure is intended as a guideline. Modify this procedure as necessary to conform with your standard practices and the operating and commissioning guidelines published by the generator and prime mover manufacturers.

Required Equipment

- SEL-300G, installed and connected according to your protection design.
- PC with serial port, terminal emulation software, and serial communication cable (for relay setting entry).

- SEL-300G Settings Sheets, filled out with settings appropriate to your generator protection application and protection cabinet design.
- AC and DC elementary schematics and wiring diagrams for this relay installation.
- Continuity tester.
- DC voltmeter.
- Protective relay ac test source:
  Minimum: Single-phase voltage plus single-phase current with ability to control phase angle between signals.
  Preferred: Two- or three-phase voltage plus three-phase current with ability to control phase angle between signals.

Commissioning Procedure

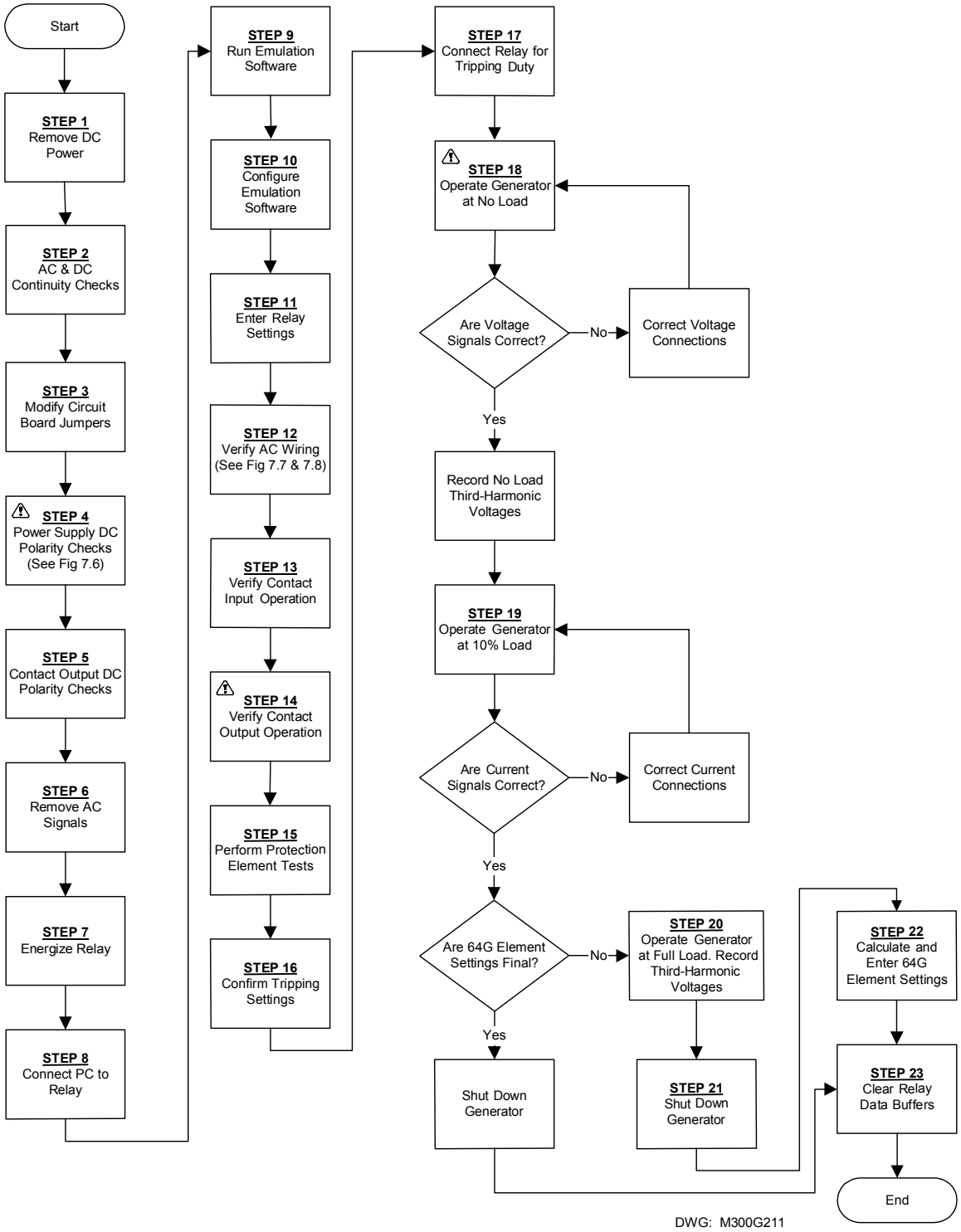

Figure 7.5: Relay Commissioning Flowchart (refer to text for detailed instructions)

Step 1. Ensure that dc power is removed from the SEL-300G dc circuits by opening the appropriate dc breaker or removing dc fuses.

Step 2. Verify the accuracy and correctness of the ac and dc connections by performing point-to-point continuity checks on the circuits associated with the SEL-300G.

Step 3. Make any necessary modifications to the relay output contact jumper positions, password or breaker command jumper positions. Refer to ***Circuit Board Jumpers and Battery*** in ***Section 5: Installation*** for additional details and instructions on how to access and modify these jumpers.

Step 4. Using a voltmeter, check the polarity of dc voltage on the energized side of the dc circuit breaker or fuse block that isolates the SEL-300G dc power supply inputs, terminals Z25 and Z26. Refer to Figure 7.6. Verify continuity between the positive, low-side terminal of the breaker or fuse block, and terminal Z25, marked "+". Verify continuity between the negative, low-side terminal of the breaker or fuse block and terminal Z26, marked "-". This step is important because the SEL-300G 24/48 Vdc power supply is polarity sensitive.

CAUTION

Do not apply reverse polarity dc voltage or ac voltage to terminals Z25 and Z26 of SEL-300G Relays rated for 24/48 Vdc applications. Relay failure and permanent power supply damage will result from application of reverse polarity dc voltage to relays rated for 24/48 Vdc applications.

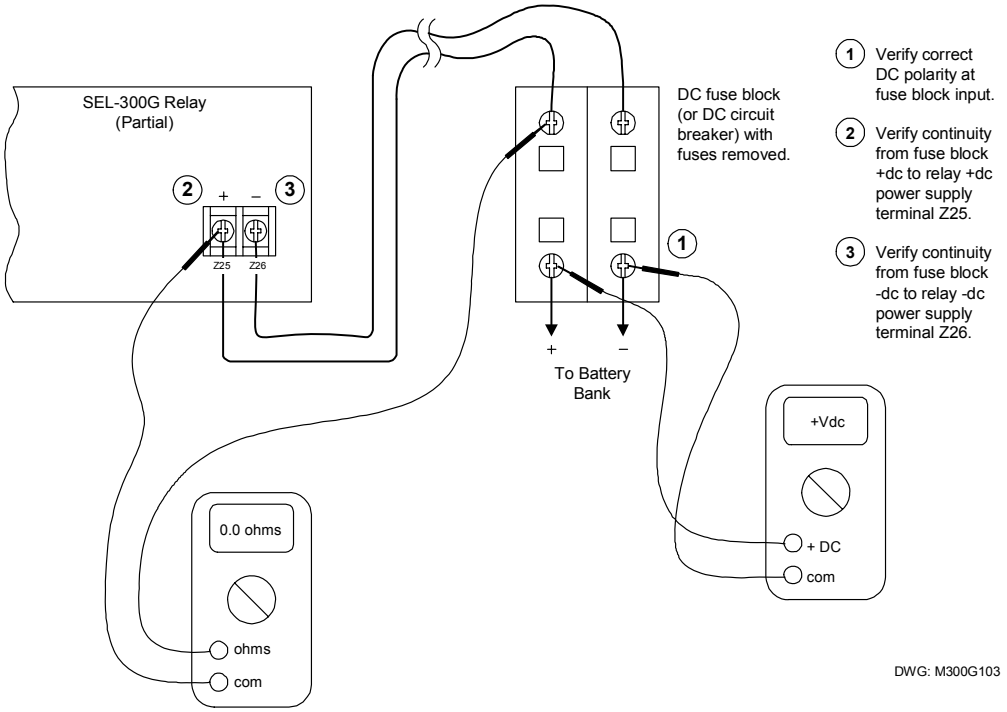

Figure 7.6: DC Supply Polarity, Continuity Checks

Step 5. Select models of the SEL-300G_1 and SEL-300G_Y Relays are equipped with polarity sensitive, high-current interrupting output contacts. When the relay is so equipped, it will have + polarity marks above even-numbered terminals in the B-series, such as B02, B04, etc. If your relay output contacts include polarity marks, review your dc wiring diagrams to ensure that even-numbered terminals are applied at a higher potential than odd-numbered terminals in their dc circuits.

Note: If an output contact is polarity marked, do not use it to switch ac control signals. If an output contact is not polarity marked, it is not polarity sensitive and can be connected with either terminal at the higher potential.

Step 6. In preparation to energize and set the relay, remove ac signals from the relay and isolate its tripping contacts.

Step 7. Energize the relay by closing the dc breaker or installing the dc fuses. Within a moment of energizing the relay, the green enable LED (EN) on the front panel should illuminate, and the relay self-test ALARM contact (A15, A16) should open (type "b" contact, see Figure 4.16).

Step 8. Connect the PC to the relay using the appropriate serial cable. Refer to Table 7.1 for typical cable numbers. These cables are available directly from SEL or you can build your own cable using the cable pinout shown in the SEL-5801 Cable Selector Software. This software is available from SEL, or can be downloaded free of charge from the SEL world wide web site at http://www.selinc.com.

Serial Port 1 on all the SEL-300G models is an EIA-485 port (4-wire). The Serial Port 1 plug-in connector accepts wire size AWG 24 to 12. Strip the wires 0.31 inches (8 mm) and install with a small slotted-tip screwdriver. Serial Port 1 connector has extra positions for IRIG-B time-code signal input.

All EIA-232 ports accept 9-pin D-subminiature male connectors. Port 2 on all the SEL-300G models also accepts demodulated IRIG-B time-code signal input.

Refer to Table 7.1 for a list of cables available from SEL for various communication applications.

Note: Listing of devices not manufactured by SEL in Table 7.1 is for the convenience of our customers. SEL does not specifically endorse or recommend such products, nor does SEL guarantee proper operation of those products, or the correctness of connections, over which SEL has no control.

For example, to connect any EIA-232 port to the 9-pin male connector on a laptop computer, order cable number C234A and specify the length needed (standard length is eight feet). For connecting devices at distances over 100 feet, SEL offers fiber-optic transceivers. The SEL-2800 family of transceivers provides fiber-optic links between devices for electrical isolation and long distance signal transmission. Contact SEL for further information on these products.

Table 7.1: Communication Cables to Connect the SEL-300G Relay to Other Devices

SEL-300G EIA-232 Serial Ports	Connect to Device (gender refers to the device)	SEL Cable #
all EIA-232 ports	PC, 25-Pin Male (DTE[b])	C227A
all EIA-232 ports	Laptop PC, 9-Pin Male (DTE[b])	C234A
all EIA-232 ports	SEL Communications Processors without IRIG-B	C272A
2	SEL Communications Processors with IRIG-B	C273A
all EIA-232 ports	SEL-PRTU	C231
2	SEL-IDM, Ports 2 through 11	C254 + C257
2[a] 3[a]	StarComm Modem, 5 Vdc Powered	C220
all EIA-232 ports	Standard Modem, 25-Pin Female (DCE[c])	C222
all EIA-232 ports	RFL-9660	C245A
All EIA-232 ports (with SEL-2800 transceiver)	SEL-2600 Series RTD Module	C805[d]
All EIA-232 ports (with SEL-2812MR transceiver)	SEL-2664 Field Ground Module	SEL C805 Multimode 200 µm core diameter fiber-optic cable with ST connectors, or SEL C807 Multimode 62.5 µm core diameter fiber-optic cable with ST connectors

[a] A corresponding main board jumper must be installed to power the StarComm Modem with +5 Vdc (0.5 A limit) from the SEL-300G. See Figure 5.25 and Table 5.7.

[b] Data Terminal Equipment

[c] Data Communication Equipment

[d] SEL part number C805Z010VVX0003 (3 meters). Refer to the Model Option Table for additional cable choices.

SEL-300G to Computer

Cable C227A

SEL-300G Relay 9-Pin Male "D" Subconnector		9-Pin DTE Device 25-Pin Female "D" Subconnector	
GND	5	7	GND
TXD	3	3	RXD
RXD	2	2	TXD
GND	9	1	RTS
CTS	8	4	CTS
		5	GND
		6	
		8	
		20	

Cable C234A

SEL-300G Relay 9-Pin Male "D" Subconnector		9-Pin DTE Device 9-Pin Female "D" Subconnector	
RXD	2	3	TXD
TXD	3	2	RXD
GND	5	5	GND
CTS	8	8	CTS
		7	RTS
		1	DCD
		4	DTR
		6	DSR

Step 9. SEL relays respond to ASCII text commands entered on the relay serial port. PC terminal emulation packages such as Microsoft® Windows® HyperTerminal®, ProComm Plus®, SmartCOM®, CROSSTALK®, and many other packages allow ASCII commands to be sent from the PC serial port and relay responses displayed. Start your PC and run the appropriate terminal emulation software.

Step 10. Configure the terminal emulation software to operate the PC-COM port (COM1, COM2, etc.) at the relay baud rate (factory default 2400 baud), using 8 data bits, 1 stop bit, no parity bit, and XON/XOFF flow control. Refer to the terminal emulation package documentation or HELP function for assistance in making these PC communication port configuration settings.

Note: Commands you type appear in bold/uppercase: **SET**. Computer keys you press appear in bold/brackets: **<Enter>**.

With the terminal emulation software active at the terminal screen, you should see an = prompt appear on the screen after you press the **<Enter>** or **<Return>** key on the PC keyboard.

The = prompt is the relay indication that it is communicating at Access Level 0. Relay settings are entered at Access Level 2.

Commands can be issued to the relay via the serial port to view metering values, change relay settings, etc. The available serial port commands are listed in Table 10.6. The commands can be accessed only from the corresponding access level as shown in Table 10.6. The access levels are:

Access Level 0 (the lowest access level)
Access Level 1
Access Level B
Access Level 2 (the highest access level)

For more information on a particular command, type **HELP cmd <Enter>**, where cmd is the name of the command you are interested in.

Passwords are required to move up in access levels if the main board Password jumper is **not** in place (Password jumper = OFF). Passwords are not required if the main board Password jumper is in place (Password jumper = ON). Refer to Table 5.5 and Table 5.6 for Password jumper information.

The factory default passwords for Access Levels 1, B, and 2 are shown in the table under the PAS command in Section 10 of this manual.

At the Access Level 0 prompt, enter the **ACC** command:

=ACC <Enter>

If the Password jumper is not in place, the relay asks for the Access Level 1 password to be entered:

Password: ? @@@@@@

The relay is shipped with the default Access Level 1 password shown in the table under the **PAS** command. At the above prompt enter the default password and press the **<Enter>** key.

The "=>" prompt indicates the relay is now in Access Level 1.

If the entered password is incorrect, the relay asks for the password again (Password: ?). The relay will ask up to three times. If the requested password is incorrectly entered three times, the relay closes the ALARM contact for one second and remains at Access Level 0 ("=" prompt).

If the Password jumper is in place, the relay does not ask for a password; it goes directly to Access Level 1.

The above two examples demonstrate how to go from Access Level 0 to Access Level 1. The procedure to go from Access Level 1 to Access Level B, Access Level 1 to Access Level 2, or Access Level B to Access Level 2 is much the same, with command **BAC** or **2AC** entered at the access level screen prompt. The relay closes the ALARM contact for one second after a successful Level B or Level 2 access. If access is denied, the ALARM contact closes for one second.

Enter the **2AC** command at the Access Level 1 prompt:

=>2AC <Enter>

If the password jumper is in place, enter the factory default Access Level 2 password, TAIL.

Using the **SET 1**, **SET 2**, **SET G**, **SET R**, and **SET P** commands, enter relay settings according to the Settings Sheets for your application.

When you issue the **SET** command, the relay presents a list of settings, one at a time. Enter a new setting, or press **<Enter>** to accept the existing setting. Editing keystrokes are shown in Table 7.2.

Table 7.2: SET Command Editing Keystrokes

Press Key(s)	Results
<Enter>	Retains setting and moves to the next setting.
^ **<Enter>**	Returns to previous setting.
< **<Enter>**	Returns to previous setting category.
> **<Enter>**	Moves to next setting category.
End <Enter>	Exits editing session, then prompts you to save the settings.
<Ctrl> X	Aborts editing session without saving changes.

The relay checks each entry to ensure that it is within the setting range. If it is not, an "Out of Range" message is generated, and the relay prompts for the setting again.

When all the settings are entered, the relay displays the new settings and prompts for approval to enable them. Answer **Y <Enter>** to enable the new settings. If changes are made to Global, SER, or Port settings, the relay is disabled while it saves the new settings. If changes are made to the Group settings for the active setting group, the relay is disabled while it saves the new settings. The ALARM contact closes momentarily and the EN LED extinguishes while the relay is disabled. The relay is disabled for as long as 15 seconds.

If changes are made to the Group settings for the inactive setting group, the relay is not disabled while it saves the new settings. The ALARM contact closes momentarily, but the EN LED remains on while the new settings are saved.

If pickup settings for 100 percent stator ground element 64G2 have not been calculated, leave Relay Word bit 64G2T out of tripping control equations. Set the Breaker Monitor function SELOGIC control equation enable BKMON = 0 in the Global relay settings. This disables the Breaker Monitor function while the relay is being tested.

Step 11. Verify relay ac connections. Connect the protective relay ac test signal source to the SEL-300G through the ac protection cabinet wiring. (You may connect directly to the relay, however this does not verify the accuracy of the wiring in the protection cabinet.) Apply rated ac voltage (67 Vln, 120 Vll) and current (1 A or 5 A) to the relay phase voltage and current inputs.

If a three-phase test source is used, set the source phase angles as shown in Figure 7.7:

When setting PHROT = ABC,
set angle Va = angle Ia = 0°
set angle Vb = angle Ib = –120°
set angle Vc = angle Ic = 120°

When setting PHROT = ACB,
set angle Va = angle Ia = 0°
set angle Vb = angle Ib = 120°
set angle Vc = angle Ic = –120°

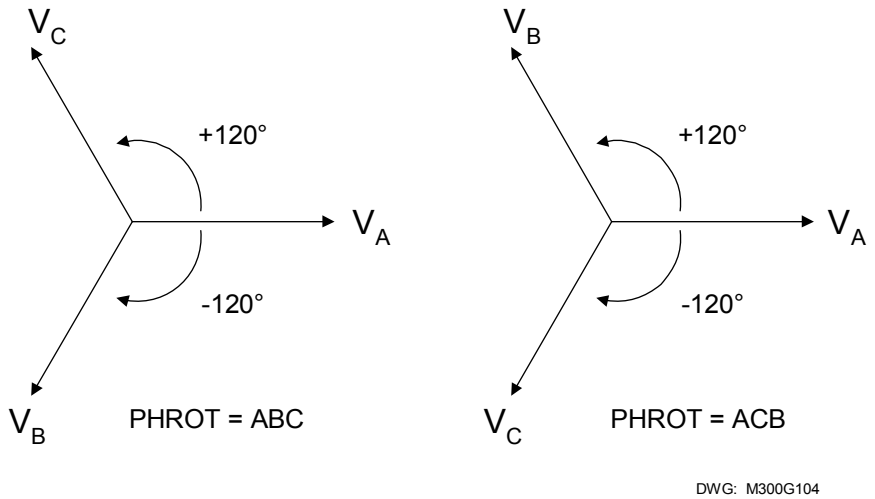

Figure 7.7: Three-Phase AC Connection Test Voltage Signals

If open-delta potentials are used, set the test source phase angles as shown in Figure 7.8:

When setting PHROT = ABC,
set angle Ia =0°
set angle Ib = –120°
set angle Ic = 120°
set angle Vab = +30°
set angle Vcb = +90°

When setting PHROT = ACB,
set angle Ia = 0°
set angle Ib = 120°
set angle Ic = –120°
set angle Vab = –30°
set angle Vcb = –90°

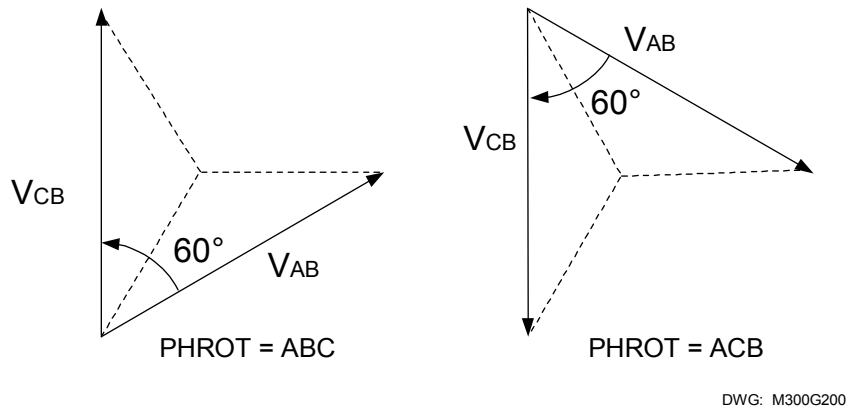

Figure 7.8: Open-Delta AC Potential Connection Test Voltage Signals

If a single-phase source is used, set the source phase angles to zero and apply the voltage and current to phases A, B, and C in turn.

Use the front-panel or serial port **METER** function to verify that the relay is measuring voltage and current magnitudes and phase angles correctly, taking into account the relay PTR and CTR settings and the fact that the quantities are displayed in primary units. This step verifies the signal polarity and per-phase ac connections to the relay.

Apply rated ac voltage (67V) to the relay VS and VN inputs if provided and used. Apply rated ac current (1 A or 5 A) to the relay IN input if used. Use the front-panel or serial port **METER** function to verify that the relay is measuring voltage and current magnitudes and phase angles correctly, taking into account the relay PTRN, PTRS, and CTRN settings and the fact that the quantities are displayed in primary units.

Step 12. Verify optoisolated input connections. Use the front-panel OTHER pushbutton and the **TAR** function to cause the relay to display Relay Word Row 31 on the relay front-panel LEDs (see ***Section 9: Front-Panel Operation*** and ***Section 10: Serial Port Communications and Commands*** for more details regarding the front-panel **TARGET** command). Apply rated dc voltage to the individual relay optoisolated input circuits. As you apply dc voltage to each input, its label will appear in the LCD display and its LED will illuminate.

Execution of the **TAR** command via the front-panel display remaps the bottom row of the front-panel target LEDs (see Figure 9.3, pushbutton OTHER).

For instance, the **TAR 31** command associates the front-panel 87 LED with input IN101. When rated dc voltage is applied to IN101, the 87 LED illuminates. Verify inputs IN201 through IN208 of SEL-300G_1 and SEL-300G_Y Relays using **TAR 40**. When input verification is complete, press the TARGET RESET or EXIT pushbutton to reset the front-panel target LEDs.

Table 7.3: SEL-300G Relay Contact I/O Viewed by the TAR Command

TAR 0 (Front-Panel LEDs)	EN	BKR CLOSED	LOP 60	TRIP	21/51V	50	51	N
TAR 1 (Front-Panel LEDs)	24	27/59	32	40	46	64G	81	87
TAR 31	ER	OOST	IN106	1IN105	IN104	IN103	IN102	IN101
TAR 32	ALARM	OUT107	OUT106	OUT105	OUT104	OUT103	OUT102	OUT101
TAR 40	IN208	IN207	IN206	IN205	IN204	IN203	IN202	IN201
TAR 42	OUT201	OUT202	OUT203	OUT204	OUT205	OUT206	OUT207	OUT208
TAR 43	OUT209	OUT210	OUT211	OUT212	*	*	*	*

Step 13. Verify relay contact output electrical performance. Use the front-panel or serial port **PULSE** command to close individual relay output contacts (see ***Section 9: Front-Panel Operation*** and ***Section 10: Serial Port Communication and***

Commands for more details regarding the **PULSE** command). Ensure that each contact operates properly in its designated annunciation, control, or tripping circuit.

CAUTION

Standard SEL relay output contacts are rated to make and carry trip coil current, but are **not** rated to interrupt trip coil current. Do not exceed the contact interrupt ratings shown in ***Relay Specifications and Options***.

Note: Later steps call for the operation of the generator to collect data. Be sure to verify trip circuit operation before the generator is run. This helps ensure the relay can operate in the unlikely event that the relay detects a generator fault during initial generator operation.

Step 14. Perform any desired protection element tests using the individual element test procedures later in this section. It is only necessary to perform tests sufficient to prove that the relay operation is as intended for the installation. Exhaustive element performance characterizations are not necessary for commissioning.

Step 15. Execute the serial port Access Level 1 **SHOWSET TR1** command. (This command instructs the relay to display active settings for tripping, event triggering, and output contact control starting with the TR1 setting.) Confirm that trip initiation settings TR1 through TR4 are set according to your Settings Sheets. Confirm that output contacts used in tripping circuits are set to close when TRIP1, TRIP2, TRIP3, or TRIP4 assert. These tripping bits typically are used individually, one TRIP*n* bit per output contact (see the tripping application examples in ***Section 4: SELOGIC Control Equations***). If any relay settings were modified during Step 14, confirm that they have been returned to their correct settings.

Step 16. Connect the relay for tripping duty. If the relay is an SEL-300G0 model and 100 percent stator ground element settings have been finalized, perform Step 17 and Step 18 to verify ac voltage and current connections, then shut down the generator and skip to Step 22. To finalize the settings for the relay 100 percent stator ground elements, it is necessary to operate the generator at no load and at full load to measure the terminal and neutral third-harmonic voltage magnitudes (see ***Section 2: Relay Element Settings*** for additional details). If 100 percent stator ground element settings have not been finalized, perform Step 17 through Step 22.

Step 17. Following the prime mover and generator manufacturers' guidelines, operate the generator at no load.

CAUTION

Be sure to follow the generator and prime mover manufacturers' guidelines with respect to generator operation and commissioning.

Use the relay front-panel or serial port **METER** command to display the ac quantities measured by the relay. Note the phase voltage magnitudes and phase angles. Phase voltage magnitudes should be nearly equal. Phase voltage phase angles should be balanced and have proper phase rotation. The positive-sequence voltage magnitude, V1, should be nearly equal to VA, VB, and VC. The negative-sequence voltage magnitude, V2, and zero-sequence voltage magnitude, 3V0, should both be nearly zero.

Note: If the relay reports V1 near zero and V2 nearly equal to VA, VB, and VC, there is a phase rotation problem. Verify the relay ac voltage connections and the relay Global phase rotation setting, PHROT. A nonzero 3V0 meter value typically indicates a single-phase voltage connection problem.

After correcting any problems indicated by the phase and sequence voltage measurements, record the VN3 and VP3 third-harmonic voltage magnitudes.

Step 18. Increase generator loading to approximately 10 percent of full load. Use the relay front-panel or serial port **METER** command to display the ac quantities measured by the relay. Note the phase current magnitudes and phase angles. Phase current magnitudes should be nearly equal. Phase current phase angles should be balanced, have proper phase rotation, and appropriate phase relationship to their phase voltages. The positive-sequence current magnitude, I1, should be nearly equal to IA, IB, and IC. The negative-sequence current magnitude, I2, and residual current magnitude should both be nearly zero.

Note: If the relay reports I1 near zero and I2 nearly equal to IA, IB, and IC, there is a phase rotation problem. Verify the relay ac current connections and the relay Global phase rotation setting, PHROT. A nonzero 3I0 meter value indicates a phase current polarity connection problem.

If the relay is an SEL-300G1 model, use the front-panel or serial port **METER DIFF** command to check differential protection quantities. Differential operate current quantities IOP1, IOP2, and IOP3 should be near zero.

Note: If the SEL-300G1 Relay **METER DIFF** function reports nonzero differential operate currents, there is likely a differential current transformer connection problem or a problem with the TRCON or CTCON settings. Use the ***Differential Element Commissioning Worksheet*** later in this section to determine the nature of the connection problem.

Step 19. Operate the generator at full load. Use the front-panel or serial port **METER** command to display the ac quantities measured by the relay. Note the ac voltage and current magnitude and phase angle measurements, using the same criteria as in Step 18. Having made any necessary corrections during early steps, the measurements should now be correct. Record the terminal and neutral third-harmonic voltage magnitudes VP3 and VN3.

Step 20. Shut down the generator.

Step 21. Calculate settings for the 64G2 element using the measurements taken above and the guidelines shown in ***Section 2: Relay Element Settings***. Using the serial port **SET** command, enter the newly calculated 64G element settings and add 64G2T to tripping SELOGIC control equations. If desired, perform 64G protection element tests to verify the element performance with the new settings.

Step 22. To prepare the relay for operation, it is helpful to clear the relay data buffers. This prevents data generated during installation testing from being confused with operational data collected later. Execute the relay commands in Table 7.4 to clear specific data.

Table 7.4: Serial Port Commands That Clear Relay Data Buffers

Serial Port Command	Task Performed:
MET RD	Resets Demand Meter Data
MET RP	Resets Peak Demand Meter Data
MET RE	Resets Energy Meter Data
MET RM	Resets Max/Min Data
HIS C	Clears Event Report and History Command Buffers
PRO R	Resets Selected Generator Operating Statistic Buffers
SER C	Clears Sequential Events Record Buffer

Note: The **PRO R** and **SER C** commands should only be used at initial installation. Do not reset the generator operating profiles or SER buffer following routine maintenance unless you are very familiar with the use of the data contained in these buffers.

Step 23. Set the Breaker Monitor function SELOGIC control equation enable BKMON back to the setting specified by your Settings Sheets. If desired, use the **SHO 1**, **SHO 2**, **SHO G**, and **SHO R** commands to record the relay settings. The relay is now ready for operation.

PROTECTION ELEMENT TESTS

Introduction

This section describes detailed test procedures for individual protection elements. While it is not necessary to test every protection function provided by the relay at commissioning time, you may wish to test selected elements to verify correct element operation.

Note: Many of the protection functions include torque-control settings, as described in ***Section 2: Relay Element Settings***. To test these elements, either set the torque-control setting directly to logical 1 or ensure that the torque-controlling conditions are satisfied by the test signals. If an element under test does not respond to test signals, verify that the torque-control condition is asserted before proceeding with further troubleshooting.

Three Voltage Source and Three Current Source Connections

Figure 7.9 shows connections to use when three voltage sources and three current sources are available. Figure 7.10 shows connections to use when two voltage sources and three current sources are available.

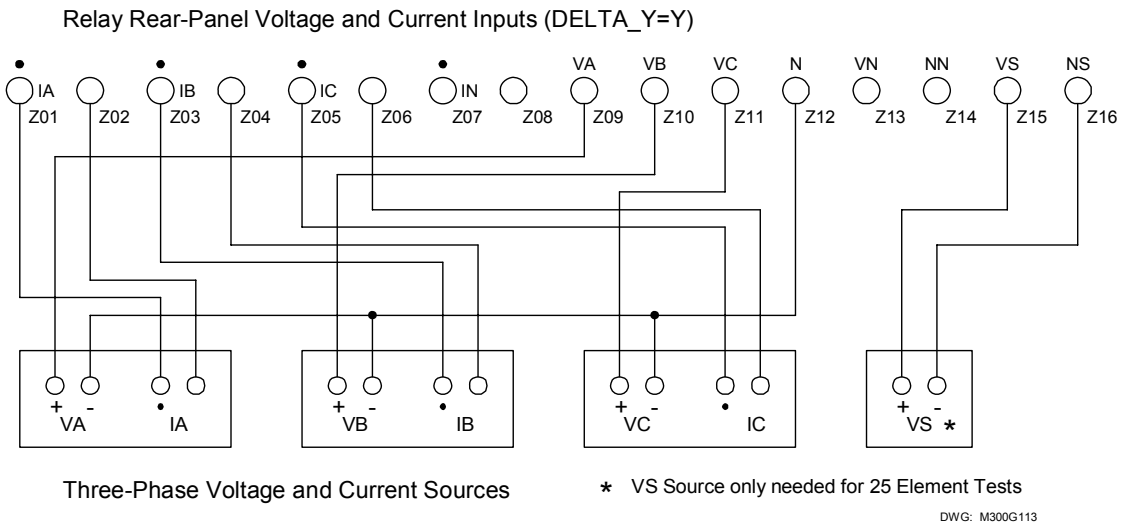

Figure 7.9: Three Voltage Source and Three Current Source Test Connections

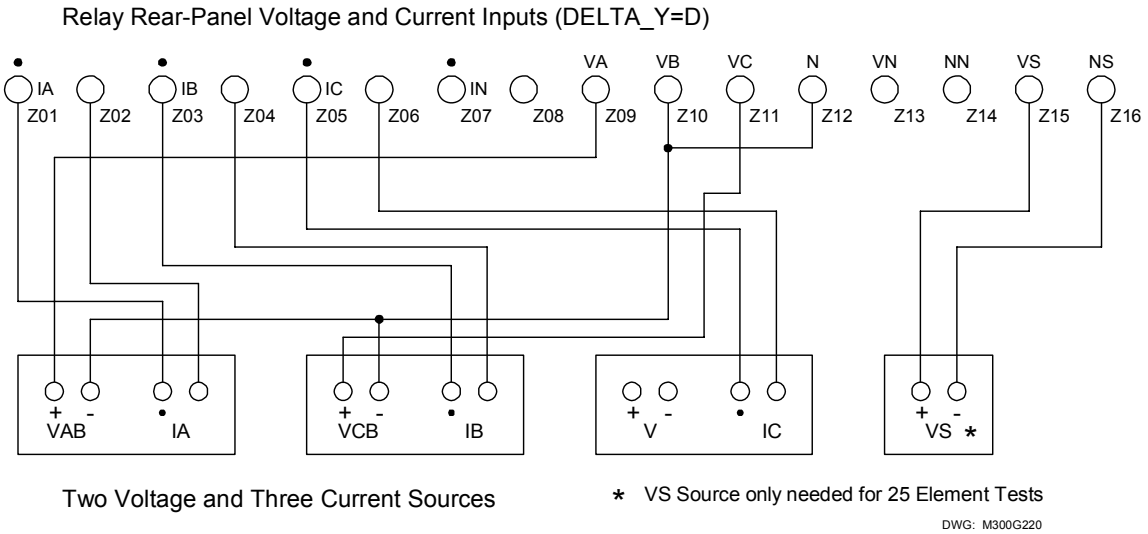

Figure 7.10: Two Voltage Source and Three Current Source Test Connections

Distance (21) Element

Equipment Needed

- SEL-300G Relay under test.
- Two- or Three-Phase AC Voltage and Current Test Source with adjustable magnitude and phase angle.
- PC with terminal emulation software and appropriate serial cable to connect the PC-COM port to the relay.

Test Source Connections

Connect the voltage and current sources according to Figure 7.9 or Figure 7.10.

Basic Element Operation

The SEL-300G distance elements are designed to provide backup protection for phase-to-phase and three-phase faults on the power system external to the generator. The relay provides two independent protection zones. Each zone is equipped with settings that define:

- Forward reach in secondary ohms.
- Offset (or reverse reach) in secondary ohms.
- Maximum Torque Angle in degrees.
- Definite-time delay in seconds.
- Delta-wye step-up transformer compensation.

The voltage and current phase shift introduced by a delta-wye step-up transformer changes the voltage and current signals presented to the SEL-300G Relay during a phase-phase fault on the system. The effect is illustrated by Figure 7.11 and Figure 7.12.

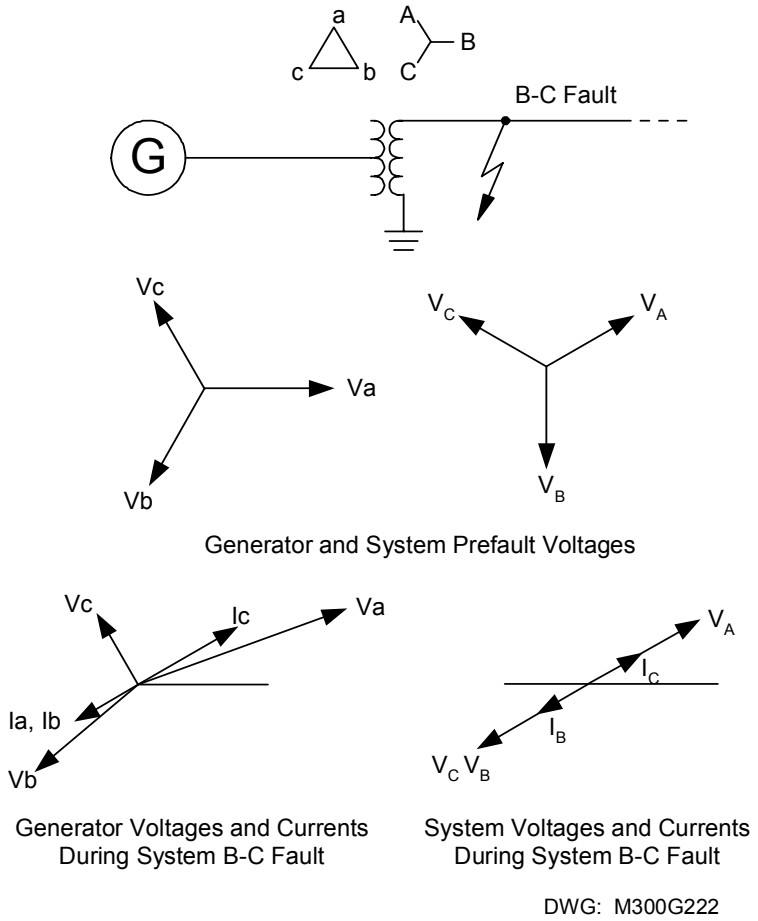

Figure 7.11: Generator Voltage and Current Relationships During a System Phase-to-Phase Fault

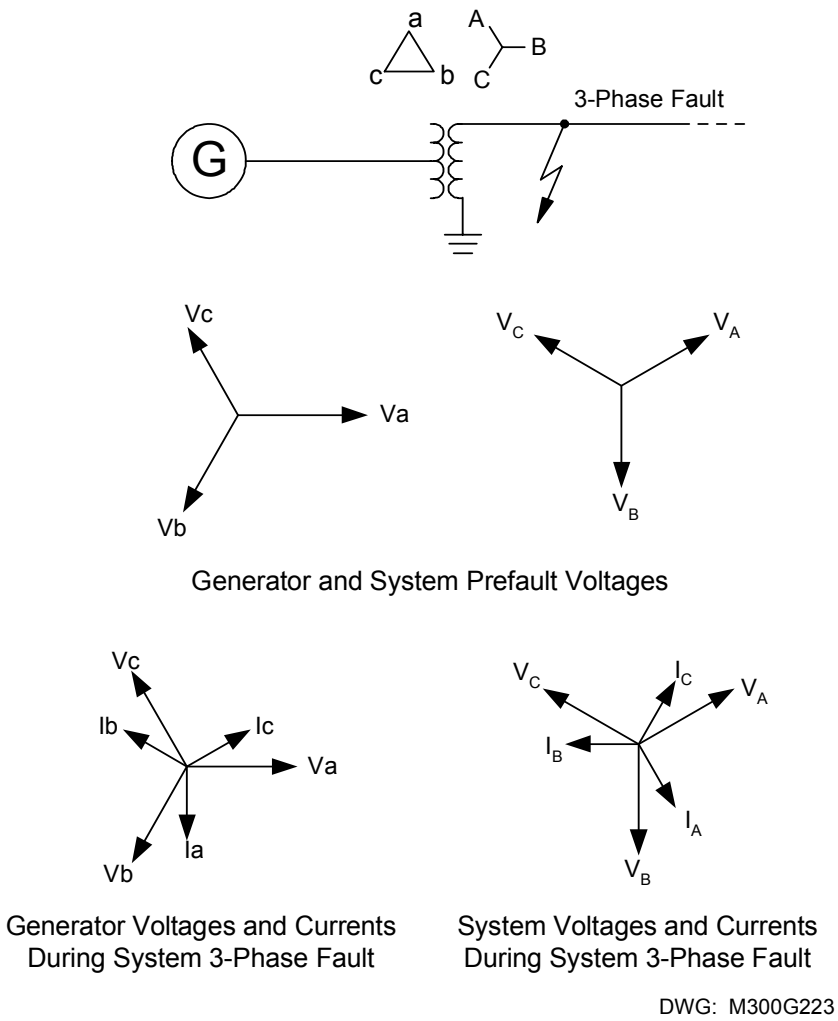

Figure 7.12: Generator Voltage and Current Relationships During a System Three-Phase Fault

The Z1CMP and Z2CMP settings instruct the SEL-300G to compensate for the effects of the delta-wye step-up transformer when the mho distance element is used. Compensator distance elements inherently compensate for the step-up transformer. The element pickup accuracy test below describes a mho distance three-phase test.

The compensator distance three-phase test is similar.

Element Pickup Accuracy Test

Step 1. Make test source connections according to Figure 7.9 or Figure 7.10.

Step 2. Using the front-panel or serial port **SHO** command, note the settings associated with the relay phase distance elements:

VNOM = _____	volts (nominal phase-to-phase voltage)
INOM = _____	amps (nominal phase current)
EBUP = D	(setting enables the phase distance elements)

Z1R = _____ ohm secondary (Zone 1 reach pickup setting)

Z1O = _____ ohm secondary (Zone 1 offset setting)

MTA1 = _____ degrees (Zone 1 Maximum Torque Angle)

Z1CMP = _____ (step-up transformer compensation)

Z1D = _____ seconds (Zone 1 element definite-time delay)

Z2R = _____ ohm secondary (Zone 2 reach pickup setting)

Z2O = _____ ohm secondary (Zone 2 offset setting)

MTA2 = _____ degrees (Zone 2 Maximum Torque Angle)

Z2CMP = _____ (step-up transformer compensation)

Z2D = _____ seconds (Zone 2 element definite-time delay)

MPF = _____ (minimum generator power factor)

MXLD = _____ per unit (maximum generator load)

21PTC = _____
Torque-Control Setting (elements are enabled when 21PTC = logical 1)

Using the front-panel or serial port **SHO G** command, note the global PHROT and DELTA_Y settings:

PHROT = _____ ABC or ACB (generator phase rotation)
DELTA_Y = _____ Y or D (generator phase pt connection)

Step 3. This element is easiest to test by simulating a three-phase fault, increasing the test currents while holding the test voltages constant. Set the test source voltage magnitudes greater than or equal to 0.45 • VNOM (when DELTA_Y = Y) or 0.75 • VNOM (when DELTA_Y = D). Set the test source voltage phase angles as shown in Figure 7.7 or Figure 7.8.

Note: Lower test voltage magnitudes may be necessary if the element reach setting is less than 10 ohms secondary.

Step 4. Set the test source current phase angles as shown below:

When setting PHROT = ABC, set angle Ia = –MTAn°
set angle Ib = –120 – MTAn°
set angle Ic = 120 – MTAn°

When setting PHROT = ACB, set angle Ia = –MTAn°
set angle Ib = 120 – MTAn°
set angle Ic = –120 – MTAn°

To predict the test current magnitude where the element will operate, use one of the following equations:

When DELTA_Y = Y:

$$I_{op} = \frac{Va}{Z1R} \text{ A secondary}$$

When DELTA_Y = D:

$$I_{op} = \frac{Vab}{1.73 \cdot Z1R} \text{ A secondary}$$

This calculation assumes that you will increase the magnitude of all three phase currents together, while holding the test voltage constant. When performing the calculation for the Zone 2 pickup, substitute the value of the Z2R setting in place of the Z1R setting.

Note: If the calculated test current exceeds your test set capabilities, you need to perform a two-stage test. In the first stage, the test set should apply balanced, three-phase voltage as calculated in Step 3 on the previous page. In the second stage, switch the test set to apply a lower test voltage and a test current that the test set is capable of producing. This approach prevents the loss-of-potential element, 60LOP, from blocking element operation due to low voltage.

When performing this test manually, it is easy to determine when an instantaneous element picks up by viewing the element state directly using the front-panel TARGET function. Press the front-panel OTHER pushbutton, use the Down arrow button to underline the word TAR in the LCD display, then press SELECT. This command sequence causes the LCD display and lower deck of target LEDs to display individual Relay Word rows. Press the Down arrow button twice to display Relay Word Row 39, which contains the distance element indications as shown in Table 7.5.

Table 7.5: Relay Word Row 39 Shows Relay Word Bits for Distance Elements

Target LED	• 24	• 27/59	• 32	• 40	• 46	• 64G	• 81	• 87
TAR 39 Command causes these LEDs to represent:	21PTC	21P1P	21P1T	21P2P	21P2T	MPP2P	MABC2P	*

With balanced, three-phase voltage applied to the relay and standard settings for the 21PTC torque-control setting, the relay should display the 21PTC Relay Word bit name in the LCD display and illuminate the 24 LED as shown in Table 7.5.

During the manual test, as you change test current magnitudes, you can see the 21P1P and 21P2P Relay Word bits assert and deassert to indicate pickup and dropout of the respective elements.

If you prefer to monitor a contact closure to indicate element pickup, use the Access Level 2 **SET** command to program an output contact to close when the element under test picks up.

Step 5. Gradually increase the magnitude of all three phase currents. Record the current magnitude applied to the relay when the instantaneous element under test asserts.

21P1P asserted when phase current magnitude equaled: _____ A secondary (Itest).

Use the equation below to calculate the element error (DELTA_Y = Y, Z1CMP = 0, +30, or –30):

$$\%\ \text{error} = \left(\frac{\frac{Va}{Itest} - Z1R}{Z1R} \right) \bullet 100$$

% error = _____

Use the equation below to calculate the element error (DELTA_Y = D, Z1CMP = 0, +30, or –30):

$$\%\ \text{error} = \left(\frac{\frac{Vab}{1.732 \cdot Itest} - Z1R}{Z1R} \right) \bullet 100$$

% error = _____

Step 6. Repeat Steps 3, 4, and 5 for the Zone 2 element.

Element Timing Accuracy Test

Note: This procedure uses the setup from the Element Pickup Accuracy Test. Perform the Element Pickup Accuracy Test before proceeding with the Element Timing Accuracy Test.

The object of the Element Timing Accuracy Test is to apply predefined signals to the relay and measure the element response time. There are two methods available to measure the element response time, SER review and output contact operation. These methods are described in ***Test Methods*** beginning on page 7-3.

21P1D Time-Delay Accuracy Test

The 21P1T Relay Word bit asserts Z1D seconds after the 21P1P element picks up. The Element Pickup Accuracy Test verified the accuracy of the 21P1P setting. This test applies current signals greater than the pickup values found above and measures the element definite operating time.

Step 1. Based on the two timing test descriptions above (SER or output contact driving an external timer), select one method and make the settings and connections necessary to support the selection. Configure the voltage test source to apply balanced, three-phase voltages with magnitudes and phase angles as used in the element accuracy test. Configure the current test sources to apply balanced, three-phase currents with magnitudes equal to 1.1 • Itest, as measured by the 21P1P accuracy test performed above.

Step 2. Expect 21P1T to assert Z1D seconds after the test signals are applied.

Step 3. Apply the test voltages calculated in Step 1. Next, apply the test currents and record the element operating time, Ttest. Remove the test voltages and currents.

Ttest = _____ seconds

Step 4. Calculate the relay timing error using the equation:

$$\%\,\text{error} = \left(\frac{\text{Ttest} - \text{Z1D}}{\text{Z1D}}\right) \bullet 100$$

% error = _____

Repeat the test for Zone 2, if desired.

Volts/Hertz (24) Element

Equipment Needed

- SEL-300G Relay under test.
- Two- or Three-Phase AC Voltage Test Source with adjustable magnitude and phase angle.
- PC with terminal emulation software and appropriate serial cable to connect the PC-COM port to the relay.

Test Source Connections

When DELTA_Y = Y, connect the voltage sources according to Figure 7.9. When DELTA_Y = D, connect the voltage sources according to Figure 7.10. Current sources are not needed for this test.

Basic Element Operation

The SEL-300G volts/hertz element is designed to detect generator overexcitation that occurs when the generator terminal voltage is increased or operating frequency is decreased. The relay measures the generator phase-to-phase voltages and the generator frequency, then calculates the volts/hertz using the following equation:

$$\%\,\text{V/Hz} = \frac{\text{Vpp}}{\text{Freq}} \bullet \frac{\text{FNOM}}{\text{VNOM}} \bullet 100$$

where:

Vpp	= measured generator phase-to-phase voltage, largest of the VAB, VBC, and VCA
Freq	= measured generator frequency
FNOM	= nominal generator frequency (Relay Global Setting)
VNOM	= nominal generator phase-to-phase voltage

When the measured phase-to-phase voltage and generator frequency are equal to the nominal settings FNOM and VNOM, the result of the equation above is 100 percent. If the phase-to-phase voltage increases or the operating frequency decreases, the equation result exceeds 100 percent and, depending on settings, the relay overexcitation elements can pick up.

The 24D1 element is a definite-time volts/hertz element that typically is applied as an overexcitation alarm. If measured volts/hertz exceed the 24D1P setting, the relay asserts the 24D1 Relay Word bit to logical 1. If this condition continues for 24D1D seconds, the relay asserts the 24D1T Relay Word bit to logical 1. After the excessive volts/hertz condition vanishes, the relay deasserts both Relay Word bits to logical 0.

The 24C2 element is a composite time-delayed element. You can enable this element with a dual-level definite-time characteristic (24CCS = DD), a simple inverse-time characteristic (24CCS = I), or a composite characteristic with inverse-time and definite-time operating areas (24CCS = ID). (See ***Section 2: Relay Element Settings*** for a complete description of the element).

Definite Time Element Pickup Accuracy Test

Step 1. Using the front-panel or serial port **SHO G** command, note the global FNOM, PHROT, and DELTA_Y settings:

FNOM = _____ Hz (nominal generator frequency)
PHROT = _____ ABC or ACB (generator phase rotation)
DELTA_Y = _____ Y or D (phase potential connection)

Make test source connections according to Figure 7.9 or Figure 7.10. Current sources are not required for this test and may be left disconnected.

Step 5. Using the front-panel or serial port **SHO** command, note the settings associated with the relay volts/hertz element:

VNOM = _____	volts (nominal phase-to-phase voltage)
E24 = Y	(setting enables the volts/hertz elements)
24D1P = _____	% volts/hertz (alarm element pickup setting)
24D1D = _____	seconds (alarm element definite-time delay)
24CCS = _____	(OFF, I, DD, ID; overexcitation element operating time curve shape)
24IP = _____	% volts/hertz (inverse-time element pickup; shown if 24CCS = I or ID)
24IC = _____	(inverse-time element curve shape; shown if 24CCS = I or ID)
24ITD = _____	(inverse-time element time-dial; shown if 24CCS = I or ID)
24D2P1 = _____	% volts/hertz (definite-time pickup 1; shown if 24CCS = DD)
24D2D1 = _____	seconds (definite-time delay 1; shown if 24CCS = DD)
24D2P2 = _____	% volts/hertz (definite-time pickup 2; shown if 24CCS = DD or ID)
24D2D2 = _____	seconds (definite-time delay 2; shown if 24CCS = DD or ID)
24CR = _____	seconds (24C2 element linear reset time)

24TC = _____
Torque-Control Setting (elements are enabled when 24TC = logical 1)

Step 2. This element is easiest to test by increasing the test voltage while holding the signal frequency equal to FNOM. Set the test source frequency equal to FNOM. Set the test source voltage phase angles as shown in Figure 7.7 or Figure 7.8.

When DELTA_Y = Y, predict the test voltage magnitude where the element will operate using the following equation:

$$V_{op} = \frac{24D1P \bullet VNOM}{\sqrt{3} \bullet 100} \text{ V secondary}$$

When DELTA_Y = D, predict the test voltage magnitude where the element will operate using the following equation:

$$V_{op} = \frac{24D1P \bullet VNOM}{100} \text{ V secondary}$$

This calculation assumes that you will increase the magnitude of all three phase voltages together, while holding the test frequency constant. When performing the calculation for the 24C2 definite time pickup, substitute the value of the 24D2P1 or 24D2P2 setting in place of the 24D1P setting.

When performing this test manually, it is easy to determine when an instantaneous element picks up by viewing the element state directly using the front-panel TARGET function. Press the front-panel OTHER pushbutton, use the Down arrow button to underline the word TAR in the LCD display, then press SELECT. This command sequence causes the LCD display and lower deck of target LEDs to display individual Relay Word rows. Press the Down arrow button twice to display Relay Word Row 2, which contains the volts/hertz element indications as shown in Table 7.6.

Table 7.6: Relay Word Row 2 Shows Relay Word Bits for Volts/Hertz Elements

Target LED	• 24	• 27/59	• 32	• 40	• 46	• 64G	• 81	• 87
TAR 2 Command causes these LEDs to represent:	24TC	24D1	24D1T	24C2	24C2T	24CR	SS1	SS2

With balanced voltages applied to the relay and standard settings for the 24TC torque-control setting, the relay should display the 24TC and 24CR Relay Word bit names in the LCD display and illuminate the 24 and 64G LEDs as shown in Table 7.6.

During the manual test, as you change test voltage magnitudes, you can see the 24D1 and 24C2 Relay Word bits assert and deassert to indicate pickup and dropout of the respective elements.

If you prefer to monitor a contact closure to indicate element pickup, use the Access Level 2 **SET** command to program an output contact to close when the element under test picks up.

Step 3. Gradually increase the magnitude of all phase voltages. Record the voltage magnitude applied to the relay when the instantaneous element under test asserts.

24D1 asserted when phase voltage magnitude equaled: _____ V secondary (Vtest).

Use the equation below to calculate the element error when DELTA_Y = Y:

$$\%\ \text{error} = \left(\frac{\frac{\sqrt{3} \cdot \text{Vtest}}{\text{VNOM}} \cdot 100 - 24\text{D1P}}{24\text{D1P}} \right) \cdot 100$$

Use the equation below to calculate the element error when DELTA_Y = D:

$$\%\ \text{error} = \left(\frac{\frac{\text{Vtest}}{\text{VNOM}} \cdot 100 - 24\text{D1P}}{24\text{D1P}} \right) \cdot 100$$

% error = _____

Step 4. Repeat Steps 3 and 4 for the 24C2 element.

Element Timing Accuracy Test

Note: This procedure uses the setup from the Element Pickup Accuracy Test. Perform the Element Pickup Accuracy Test before proceeding with the Element Timing Accuracy Test.

The object of the Element Timing Accuracy Test is to apply predefined signals to the relay and measure the element response time. There are two methods available to measure the element response time, SER review and output contact operation. These methods are described in ***Test Methods*** beginning on page 7-3.

24D1D Time-Delay Accuracy Test

The 24D1T Relay Word bit asserts 24D1D seconds after the measured volts/hertz exceed the 24D1P setting. The Element Pickup Accuracy Test verified the accuracy of the 24D1P setting. This test applies signals greater than the 24D1P setting and measures the element definite operating time.

Step 1. Based on the two timing test descriptions above (SER or output contact driving an external timer), select one method and make the settings and connections necessary to support the selection. Configure the voltage test source to apply balanced voltages with magnitudes equal to 1.1 • Vtest, as measured by the 24D1P test performed above.

Step 2. Expect 24D1T to assert 24D1D seconds after the test signals are applied.

Step 3. Apply the test voltages calculated in Step 1 and record the element operating time, Ttest. Remove the test voltages.

Ttest = _____ seconds

Step 4. Calculate the relay timing error using the equation:

$$\%\,\text{error} = \left(\frac{\text{Ttest} - \text{24D1D}}{\text{24D1D}}\right) \bullet 100$$

% error = _____

24C2 Time-Delay Accuracy Test, 24CCS = DD

When 24CCS = DD, the 24C2 element operates as a definite-time delayed element with two independent time delays, each associated with an independent pickup setting, as shown in Figure 7.13. This test procedure uses up to four test points to verify that the definite-time delays are operating properly.

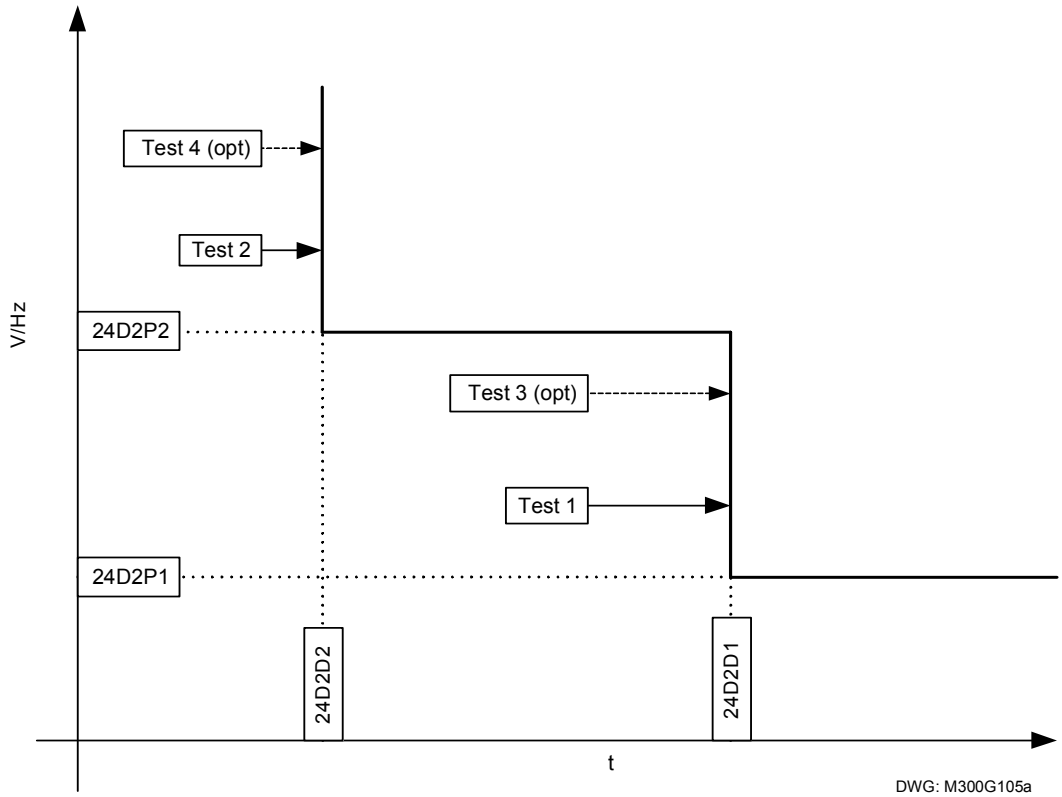

Figure 7.13: 24C2 Time-Delay Test Points, 24CCS = DD

Step 1. When DELTA_Y = Y, use the equations below to calculate the test voltage magnitudes for Test Point 1, Test Point 2, and the optional Test Points 3 and 4, if desired, using the equations below.

Select TestPoint1 such that:

24D2P1 < TestPoint1 < 24D2P2

$$Vtest1 = \frac{TestPoint1 \bullet VNOM}{\sqrt{3} \bullet 100} \text{ V secondary}$$

Vtest1 = _____ V secondary

Select optional TestPoint3 such that

TestPoint1 < TestPoint3 < 24D2P2

$$Vtest3 = \frac{TestPoint3 \bullet VNOM}{\sqrt{3} \bullet 100} \text{ V secondary}$$

Vtest3 = _____ V secondary

Select TestPoint2 such that:

TestPoint2 > 24D2P2

$$Vtest2 = \frac{TestPoint2 \bullet VNOM}{\sqrt{3} \bullet 100} \text{ V secondary}$$

Vtest2 = _____ V secondary

Select optional Test Point 4 such that

TestPoint4 > TestPoint2

$$Vtest4 = \frac{TestPoint4 \bullet VNOM}{\sqrt{3} \bullet 100} \text{ V secondary}$$

Vtest4 = _____ V secondary

When DELTA_Y = D, use the equations below to calculate the test voltage magnitudes for Test Point 1, Test Point 2, and the optional Test Points 3 and 4, if desired, using the equations below.

Select TestPoint1 such that:

24D2P1 < TestPoint1 < 24D2P2

$$Vtest1 = \frac{TestPoint1 \bullet VNOM}{100} \text{ V secondary}$$

Vtest1 = _____ V secondary

Select optional TestPoint3 such that:

TestPoint1 < TestPoint3 < 24D2P2

$$\text{Vtest3} = \frac{\text{TestPoint3} \bullet \text{VNOM}}{100} \text{ V secondary}$$

Vtest3 = _____ V secondary

Select TestPoint2 such that:

TestPoint2 > 24D2P2

$$\text{Vtest2} = \frac{\text{TestPoint2} \bullet \text{VNOM}}{100} \text{ V secondary}$$

Vtest2 = _____ V secondary

Select optional TestPoint4 such that:

TestPoint4 > TestPoint2

$$\text{Vtest4} = \frac{\text{TestPoint4} \bullet \text{VNOM}}{100} \text{ V secondary}$$

Vtest4 = _____ V secondary

Step 2. Based on the two timing test descriptions above (SER or output contact driving an external timer), select one method and make the settings and connections necessary to support the selection. Configure the voltage test source to apply balanced, three-phase voltages with magnitudes equal to Vtest1.

Step 3. Apply the test voltages and record the element operating time, Ttest1. Remove the test voltages for at least 24CR seconds to permit the element to fully reset. Repeat using Vtest2, Vtest3, and Vtest4.

Ttest1 = _____ seconds

Ttest2 = _____ seconds

Ttest3 = _____ seconds

Ttest4 = _____ seconds

Step 4. Calculate the relay timing errors at each test point using the equation:

$$\text{\% error1 and error3} = \left(\frac{\text{Ttestn} - \text{24D2D1}}{\text{24D2D1}}\right) \bullet 100$$

$$\text{\% error2 and error4} = \left(\frac{\text{Ttestn} - \text{24D2D2}}{\text{24D2D2}}\right) \bullet 100$$

% error1 = _____

% error2 = _____

% error3 = _____

% error4 = _____

24C2 Time-Delay Accuracy Test, 24CCS = I

When 24CCS = I, the 24C2 element operates as an inverse-time delayed element, as shown in Figure 7.14. This test procedure uses three test points to verify that the element is operating properly.

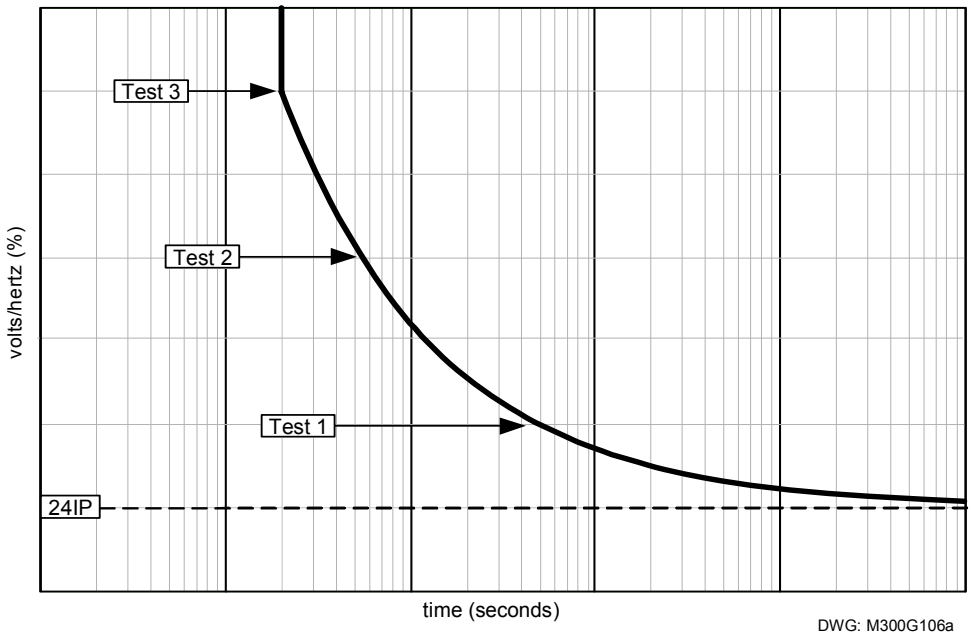

Figure 7.14: 24C2 Time-Delay Test Points, 24CCS = I

Step 1. When DELTA_Y = Y, calculate the test voltage magnitudes for Test Point 1, Test Point 2, and Test Point 3 using the equations below.

$$Vtest1 = \frac{1.1 \bullet 24IP \bullet VNOM}{\sqrt{3} \bullet 100} \text{ V secondary}$$

Vtest1 = _____ V secondary

$$Vtest2 = \frac{1.3 \bullet 24IP \bullet VNOM}{\sqrt{3} \bullet 100} \text{ V secondary}$$

Vtest2 = _____ V secondary

$$Vtest3 = \frac{1.5 \bullet 24IP \bullet VNOM}{\sqrt{3} \bullet 100} \text{ V secondary}$$

Vtest3 = _____ V secondary

Calculate the expected operate time at each test point using the equation:

$$\text{Topn} = \frac{24\text{ITD}}{\left(\left|\dfrac{\left(\dfrac{\text{Vtestn} \bullet \sqrt{3}}{\text{VNOM}}\right)}{\dfrac{24\text{IP}}{100}} - 1\right|\right)^{24\text{IC}}} \text{ seconds}$$

Top1 = _____ seconds
Top2 = _____ seconds
Top3 = _____ seconds

Note: The Top*n* equation above assumes that the test voltage frequency is equal to FNOM.

When DELTA_Y = D, calculate the test voltage magnitudes for Test Point 1, Test Point 2, and Test Point 3 using the equations below.

$$\text{Vtest1} = \frac{1.1 \bullet 24\text{IP} \bullet \text{VNOM}}{100} \text{ V secondary}$$

Vtest1 = _____ V secondary

$$\text{Vtest2} = \frac{1.3 \bullet 24\text{IP} \bullet \text{VNOM}}{100} \text{ V secondary}$$

Vtest2 = _____ V secondary

$$\text{Vtest3} = \frac{1.5 \bullet 24\text{IP} \bullet \text{VNOM}}{100} \text{ V secondary}$$

Vtest3 = _____ V secondary

Calculate the expected operate time at each test point using the equation:

$$\text{Topn} = \frac{24\text{ITD}}{\left(\left|\dfrac{\left(\dfrac{\text{Vtestn}}{\text{VNOM}}\right)}{\dfrac{24\text{IP}}{100}} - 1\right|\right)^{24\text{IC}}} \text{ seconds}$$

Top1 = _____ seconds
Top2 = _____ seconds
Top3 = _____ seconds

Note: The Top*n* equation above assumes that the test voltage frequency is equal to FNOM.

Step 2. Based on the two timing test descriptions above (SER or output contact driving an external timer), select one method and make the settings and connections necessary to

support the selection. Configure the voltage test source to apply balanced, three-phase voltages with magnitudes equal to Vtest1.

Step 3. Apply the test voltages and record the element operating time, Ttest1. Remove the test voltages for at least 24CR seconds to permit the element to fully reset. Repeat using Vtest2 and Vtest3.

Ttest1 = _____ seconds
Ttest2 = _____ seconds
Ttest3 = _____ seconds

Step 4. Calculate the relay timing errors at each test point using the equation:

$$\%\,\text{errorn} = \left(\frac{\text{Ttestn} - \text{Topn}}{\text{Topn}}\right) \bullet 100$$

% error1 = _____
% error2 = _____
% error3 = _____

24C2 Time-Delay Accuracy Test, 24CCS = ID

When 24CCS = ID, the 24C2 element operates as a composite element having an inverse-time and a definite-time characteristic, as shown in Figure 7.15. This test procedure uses four test points to verify that the element is operating properly.

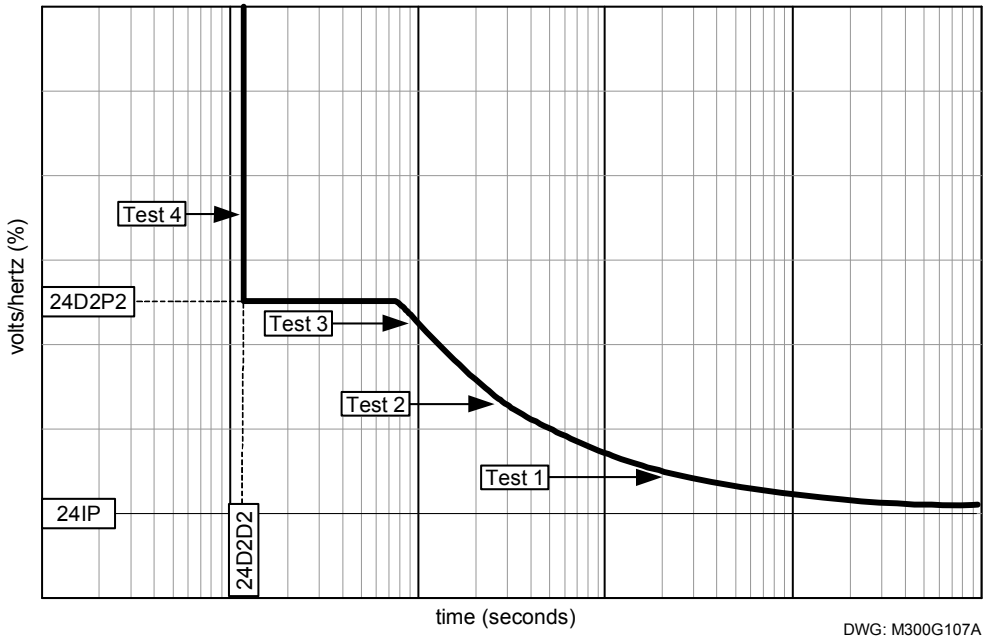

Figure 7.15: 24C2 Time-Delay Test Points, 24CCS = ID

Step 1. When DELTA_Y = Y, calculate the test voltage magnitudes for TestPoint1, TestPoint2, and TestPoint3 using the equations below. TestPoints 1, 2, and 3 should be selected such that they are on the inverse-time curve as shown in Figure 7.15.

TestPoint1 = 1.1 • (24IP)

$$\text{Vtest1} = \frac{\text{TestPoint1} \bullet \text{VNOM}}{\sqrt{3} \bullet 100} \text{ V secondary}$$

Vtest1 = _____ V secondary

TestPoint1 < TestPoint2 < 24D2P2

$$\text{Vtest2} = \frac{\text{TestPoint2} \bullet \text{VNOM}}{\sqrt{3} \bullet 100} \text{ V secondary}$$

Vtest2 = _____ V secondary

TestPoint2 < TestPoint3 < 24D2P2

$$\text{Vtest3} = \frac{\text{TestPoint3} \bullet \text{VNOM}}{\sqrt{3} \bullet 100} \text{ V secondary}$$

Vtest3 = _____ V secondary

Select Test Point 4 such that

TestPoint4 > 1.1 • (24D2P2)

$$\text{Vtest4} = \frac{\text{TestPoint4} \bullet \text{VNOM}}{\sqrt{3} \bullet 100} \text{ V secondary}$$

Vtest4 = _____ V secondary

Calculate the expected operate time at TestPoints 1, 2, and 3 using the following equation:

$$\text{Topn} = \frac{24\text{ITD}}{\left(\left| \frac{\left(\frac{\text{Vtestn} \cdot \sqrt{3}}{\text{VNOM}} \right)}{\frac{24\text{IP}}{100}} - 1 \right| \right)^{24\text{IC}}} \text{ seconds}$$

Top1 = _____ seconds
Top2 = _____ seconds
Top3 = _____ seconds
Top4 = 24D2D2 seconds = _____ seconds

Note: The Topn equation above assumes that the test voltage is applied at a frequency equal to FNOM.

When DELTA_Y = D, calculate the test voltage magnitudes for Test Point 1, Test Point 2, and Test Point 3 using the equations below. TestPoints 1, 2, and 3 should be selected such that they are on the inverse-time curve as shown in Figure 7.15.

TestPoint1 = 1.1 • (24IP)

$$Vtest1 = \frac{TestPoint1 \bullet VNOM}{100} \text{ V secondary}$$

Vtest1 = _____ V secondary

TestPoint1 < TestPoint2 < 24D2P2

$$Vtest2 = \frac{TestPoint2 \bullet VNOM}{100} \text{ V secondary}$$

Vtest2 = _____ V secondary

TestPoint2 < TestPoint3 < 24D2P2

$$Vtest3 = \frac{TestPoint3 \bullet VNOM}{100} \text{ V secondary}$$

Vtest3 = _____ V secondary

Select Test Point 4 such that

TestPoint4 > 1.1 • (24D2P2)

$$Vtest4 = \frac{TestPoint4 \bullet VNOM}{100\%} \text{ V secondary}$$

Vtest4 = _____ V secondary

Calculate the expected operate time at Test Points 1, 2, and 3 using the following equation:

$$Topn = \frac{24ITD}{\left(\left| \frac{\left(\frac{Vtestn}{VNOM}\right)}{\frac{24IP}{100}} - 1 \right| \right)^{24IC}} \text{ seconds}$$

Top1 = _____ seconds
Top2 = _____ seconds
Top3 = _____ seconds
Top4 = 24D2D2 seconds = _____ seconds

Note: The Top*n* equation above assumes that the test voltage is applied at a frequency equal to FNOM.

Step 2. Based on the two timing test descriptions above (SER or output contact driving an external timer), select one method and make the settings and connections necessary to support the selection. Configure the voltage test source to apply balanced, three-phase voltages with magnitudes equal to Vtest1.

Step 3. Apply the test voltages and record the element operating time, Ttest1. Remove the test voltages for at least 24CR seconds to permit the element to fully reset. Repeat using Vtest2, Vtest3, and Vtest4.

Ttest1 = _____ seconds
Ttest2 = _____ seconds
Ttest3 = _____ seconds
Ttest4 = _____ seconds

Step 4. Calculate the relay timing errors at each test point using the equation:

$$\%\,\text{errorn} = \left(\frac{\text{Ttestn} - \text{Topn}}{\text{Topn}}\right) \bullet 100$$

% error1 = _____
% error2 = _____
% error3 = _____
% error4 = _____

Synchronism Checking (25) Function

Equipment Needed

- SEL-300G Relay under test.
- Three- or Four-Phase AC Voltage Test Source with adjustable magnitude, phase angle, and frequency.
- PC with terminal emulation software and appropriate serial cable to connect the PC-COM port to the relay.

Test Source Connections

Connect the voltage sources according to Figure 7.9 or Figure 7.10.

Basic Element Operation

The SEL-300G synchronism checking function is designed to ensure that the generator and system voltage magnitudes, phase angles, and frequencies are matched within settable limits before the generator breaker can be closed. Individually, the limit checks are simple to test.

First, the relay compares the magnitude of the VS input voltage to the 25VHI and 25VLO settings to ensure that the system voltage magnitude is within an acceptable window.

Next, the relay calculates the magnitude and phase angle of the generator voltage designated by the SYNCP setting. The magnitude is multiplied by the 25RCF setting and the phase angle is adjusted by the COMPA setting. We refer to the result as VP.

The relay compares the magnitude of VP to the 25VHI and 25VLO settings, to ensure the generator voltage is within the acceptable window. If the 25VDIF setting is not OFF, the relay compares the magnitudes of VP and VS to ensure they are within 25VDIF percent of each other.

Next, the relay calculates slip frequency using the frequency of the VS signal and the frequency measured on the VA or VAB input. By definition, the VA/VAB frequency is the same as the VP frequency, as all three generator phases turn together. The relay compares the slip frequency to the 25SHI and 25SLO settings to ensure the slip is within the window defined by those settings.

Finally, the relay calculates two phase angle differences between VS and VP. The first difference is the absolute (uncompensated) difference. The second difference is compensated by SLIP • TCLOSD • 360°. The compensated phase angle difference is a predictive value. It predicts the phase angle difference that will be present between VP and VS in TCLOSD seconds, assuming that the SLIP is constant between now and then. The relay uses the uncompensated phase angle difference to create the 25A2 and CFA elements. It uses the compensated differences to create the 25A1 and 25C elements.

Voltage Element Accuracy Test

Use the following steps to test accuracies of the voltage signals used in the synchronism checking function.

Step 1. Make test source connections according to Figure 7.9 or Figure 7.10.

Step 2. Using the front-panel or serial port **SHO** command, note the settings associated with the relay synch-check function:

E25 = Y	(setting enables the synch check function)
25VLO = _____	volts secondary (minimum acceptable system voltage)
25VHI = _____	volts secondary (maximum acceptable system voltage)
25VDIF = _____	percent (maximum voltage difference)
25RCF = _____	(voltage ratio correction factor)
25SLO = _____	Hz (minimum acceptable slip frequency)
25SHI = _____	Hz (maximum acceptable slip frequency)
COMPA = _____	degrees (transformer compensation angle)
25ANG1 = _____	degrees (maximum angle 1)
25ANG2 = _____	degrees (maximum angle 2)
CANGLE = _____	degrees (target breaker close angle)
TCLOSD = _____	seconds (breaker closing time)
CFANGL = _____	degrees (breaker close failure angle)
27VSP = _____	volts secondary (dead-bus undervoltage pickup)

BSYNCH = _____
Block Synch Check (function is blocked when BSYNCH = logical 1)

Using the front-panel or serial port **SHO G** command, note the global FNOM, PHROT and DELTA_Y settings:

FNOM = _____ Hz (nominal system frequency)
PHROT = _____ ABC or ACB (generator phase rotation)
DELTA_Y = _____ Y or D (generator phase pt connection)

Step 3. The voltage elements are easiest to test by applying all three phase voltages and VS, then adjusting the applied voltage magnitudes to cause the elements under test to pick up and drop out. A combination of relay settings determine the voltage phase angles you should apply to test the synch-check elements. Refer to Table 7.7 and make the test source settings suggested for your combination of SYNCP, COMPA, DELTA_Y, and PHROT settings.

Table 7.7: Synch-Check Element Test Voltage Phase Angles

VS	Generator Voltages When Angle = 0°	Relay Settings	VP and Error Calculation
0° V_S	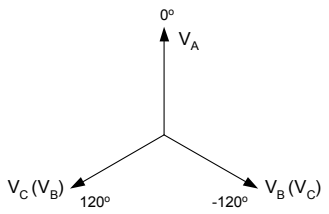	SYNCP = VA COMPA = 0 DELTA_Y = Y PHROT = B(C)	$\lvert VP \rvert = \lvert VA \rvert \cdot 25RCF$ $errorP = \left(\frac{(VTestP \cdot 25RCF) - 25VLO}{25VLO} \right) \cdot 100\%$
0° V_S	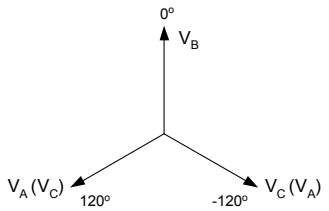	SYNCP = VB COMPA = 0 DELTA_Y = Y PHROT = B(C)	$\lvert VP \rvert = \lvert VB \rvert \cdot 25RCF$ $errorP = \left(\frac{(VTestP \cdot 25RCF) - 25VLO}{25VLO} \right) \cdot 100\%$
0° V_S	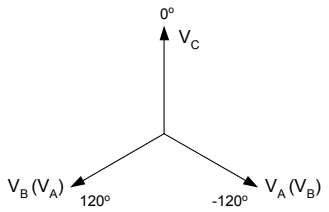	SYNCP = VC COMPA = 0 DELTA_Y = Y PHROT = B(C)	$\lvert VP \rvert = \lvert VC \rvert \cdot 25RCF$ $errorP = \left(\frac{(VTestP \cdot 25RCF) - 25VLO}{25VLO} \right) \cdot 100\%$

VS	Generator Voltages When Angle = 0°	Relay Settings	VP and Error Calculation
0° V_S	V_A -30° V_C 90° -150° V_B	SYNCP = VAB COMPA = 0 DELTA_Y = Y PHROT = B	$\lvert VP \rvert = \lvert VA \rvert \cdot 1.732 \cdot 25RCF$ $errorP = \left(\frac{(VTestP \cdot 1.732 \cdot 25RCF) - 25VLO}{25VLO} \right) \cdot 100\%$
0° V_S	V_B -30° V_A 90° -150° V_C	SYNCP = VBC COMPA = 0 DELTA_Y = Y PHROT = B	$\lvert VP \rvert = \lvert VB \rvert \cdot 1.732 \cdot 25RCF$ $errorP = \left(\frac{(VTestP \cdot 1.732 \cdot 25RCF) - 25VLO}{25VLO} \right) \cdot 100\%$
0° V_S	V_A 30° V_C -90° V_B 150°	SYNCP = VAB COMPA = 0 DELTA_Y = Y PHROT = C	$\lvert VP \rvert = \lvert VA \rvert \cdot 1.732 \cdot 25RCF$ $errorP = \left(\frac{(VTestP \cdot 1.732 \cdot 25RCF) - 25VLO}{25VLO} \right) \cdot 100\%$
0° V_S	V_B 30° V_A -90° V_C 150°	SYNCP = VBC COMPA = 0 DELTA_Y = Y PHROT = C	$\lvert VP \rvert = \lvert VB \rvert \cdot 1.732 \cdot 25RCF$ $errorP = \left(\frac{(VTestP \cdot 1.732 \cdot 25RCF) - 25VLO}{25VLO} \right) \cdot 100\%$

VS	Generator Voltages When Angle = 0°	Relay Settings	VP and Error Calculation
0° V_S	V_{AB} 30° V_{CB} 90°	SYNCP = VA COMPA = 0 DELTA_Y = D PHROT = B	$\lvert VP \rvert = \frac{\lvert VAB \rvert}{1.732} \cdot 25RCF$ $errorP = \left(\frac{\left(\frac{VTestP}{1.732} \cdot 25RCF \right) - 25VLO}{25VLO} \right) \cdot 100\%$
0° V_S	150° -150° V_{AB} V_{CB}	SYNCP = VB COMPA = 0 DELTA_Y = D PHROT = B	$\lvert VP \rvert = \frac{\lvert VAB \rvert}{1.732} \cdot 25RCF$ $errorP = \left(\frac{\left(\frac{VTestP}{1.732} \cdot 25RCF \right) - 25VLO}{25VLO} \right) \cdot 100\%$
0° V_S	V_{CB} -30° -90° V_{AB}	SYNCP = VC COMPA = 0 DELTA_Y = D PHROT = B	$\lvert VP \rvert = \frac{\lvert VAB \rvert}{1.732} \cdot 25RCF$ $errorP = \left(\frac{\left(\frac{VTestP}{1.732} \cdot 25RCF \right) - 25VLO}{25VLO} \right) \cdot 100\%$
0° V_S	V_{AB} 0° V_{CB} 60°	SYNCP = VAB COMPA = 0 DELTA_Y = D PHROT = B	$\lvert VP \rvert = \lvert VAB \rvert \cdot 25RCF$ $errorP = \left(\frac{(VTestP \cdot 25RCF) - 25VLO}{25VLO} \right) \cdot 100\%$
0° V_S	-120° V_{AB} 150° V_{CB}	SYNCP = VBC COMPA = 0 DELTA_Y = D PHROT = B	$\lvert VP \rvert = VBC \cdot 25RCF$ $errorP = \left(\frac{(VTestP \cdot 25RCF) - 25VLO}{25VLO} \right) \cdot 100\%$
0° V_S	V_{AB} -30° -90° V_{CB}	SYNCP = VC COMPA = 0 DELTA_Y = D PHROT = B	$\lvert VP \rvert = \frac{\lvert VAB \rvert}{1.732} \cdot 25RCF$ $errorP = \left(\frac{\left(\frac{VTestP}{1.732} \cdot 25RCF \right) - 25VLO}{25VLO} \right) \cdot 100\%$

VS	Generator Voltages When Angle = 0°	Relay Settings	VP and Error Calculation
0° V_S	V_{CB} 30° V_{AB} 90°	SYNCP = VC COMPA = 0 DELTA_Y = D PHROT = B	$\lvert VP\rvert = \frac{\lvert VCB\rvert}{1.732} \cdot 25RCF$ $errorP = \left(\frac{\left(\frac{VTestP}{1.732} \cdot 25RCF\right) - 25VLO}{25VLO} \right) \cdot 100\%$
0° V_S	V_{CB} 150° V_{AB} -150°	SYNCP = VB COMPA = 0 DELTA_Y = D PHROT = B	$\lvert VP\rvert = \frac{\lvert VAB\rvert}{1.732} \cdot 25RCF$ $errorP = \left(\frac{\left(\frac{VTestP}{1.732} \cdot 25RCF\right) - 25VLO}{25VLO} \right) \cdot 100\%$
0° V_S	V_{AB} 0° V_{CB} -60°	SYNCP = VB COMPA = 0 DELTA_Y = D PHROT = B	$\lvert VP\rvert = \lvert VAB\rvert \cdot 25RCF$ $errorP = \left(\frac{(VTestP \cdot 25RCF) - 25VLO}{25VLO} \right) \cdot 100\%$
0° V_S	V_{AB} 120° V_{CB} -180°	SYNCP = VB COMPA = 0 DELTA_Y = D PHROT = B	$\lvert VP\rvert = \lvert VCB\rvert \cdot 25RCF$ $errorP = \left(\frac{(VTestP \cdot 25RCF) - 25VLO}{25VLO} \right) \cdot 100\%$
• When COMPA = –30, Set ∠VS = +30°		• When COMPA = +30, Set ∠VS = –30°	

Step 4. The 59VS element asserts when 25VLO < |VS| < 25VHI. To predict the test voltage magnitude where the 59VP element will pick up, use the equations for |VP| shown in Table 7.7 for your combination of relay settings.

This calculation assumes that you will increase the magnitude of phase voltages together, while holding the phase angles constant.

When performing this test manually, it is easy to determine when an instantaneous element picks up by viewing the element state directly using the front-panel TARGET function. Press the front-panel OTHER pushbutton, use the Down arrow button to underline the word TAR in the LCD display, then press SELECT. This command sequence causes the LCD display and lower deck of target LEDs to display individual Relay Word rows. Press the Down arrow button several times to display Relay Word Row 36, which contains the synch-check voltage element indications as shown in Table 7.8.

Table 7.8: Relay Word Row 36 Shows Relay Word Bits for Synch-Check Elements

Target LED	• 24	• 27/59	• 32	• 40	• 46	• 64G	• 81	• 87
TAR 36 Command causes these LEDs to represent:	59VP	59VS	CFA	BKRCF	BSYNCH	25C	25A1	25A2

During the manual test, as you change test voltage magnitudes, you can see the 59VP and 59VS Relay Word bits assert and deassert to indicate pickup and dropout of the respective elements.

If you prefer to monitor a contact closure to indicate element pickup, use the Access Level 2 **SET** command to program an output contact to close when the element under test picks up.

Step 5. Gradually increase the magnitude of the phase voltages. Record the voltage magnitude applied to the relay when the 59VP element asserts.

59VP asserted when phase voltage magnitude equaled: _____ V secondary (VTestP).

Step 6. Gradually increase the magnitude of the synch voltage. Record the voltage magnitude applied to the relay when the 59VS element asserts.

59VS asserted when synch voltage magnitude equaled: _____ V secondary (VTestS).

Use the equation shown in the appropriate area of Table 7.7 to calculate the 59VP element error.

errorP = _____ %

Use the equation below to calculate the 59VS element error:

$$\text{errorS} = \left(\frac{\text{VtestS} - 25\text{VLO}}{25\text{VLO}} \right) \bullet 100\%$$

errorS = _____ %

Slip Frequency Accuracy Test

Note: This procedure uses the setup from the voltage element accuracy test. Perform the voltage element accuracy test before proceeding with the slip frequency accuracy test.

Step 1. Configure the voltage test sources to apply balanced, three-phase voltages and synch voltage with magnitudes and phase angles as used in the voltage element accuracy test.

Step 2. Set the synch voltage source frequency equal to the FNOM nominal frequency setting. The SEL-300G Relay defines slip frequency positive when the generator frequency is greater than system frequency. The slip frequency element, SF, asserts when:

25SLO < (Generator Frequency) – (System Frequency) < 25SHI Hz

When performing this test manually, it is easy to determine when the slip frequency element picks up by viewing the element state directly using the front-panel TARGET function. Press the front-panel OTHER pushbutton, use the Down arrow button to underline the word TAR in the LCD display, then press SELECT. This command sequence causes the LCD display and lower deck of target LEDs to display individual Relay Word rows. Press the Down arrow button several times to display Relay Word Row 37, which contains the slip frequency element indications as shown in Table 7.9.

Table 7.9: Relay Word Row 37 Shows Relay Word Bits for Slip Frequency Elements

Target LED	• 24	• 27/59	• 32	• 40	• 46	• 64G	• 81	• 87
TAR 37 Command causes these LEDs to represent:	59PP2	27PP2	SF	VDIF	GENVHI	GENVLO	GENFHI	GENFLO

During the manual test, as you change test voltage frequencies, you can see the SF, GENFHI, and GENFLO Relay Word bits assert and deassert to indicate pickup and dropout of the respective elements.

If you prefer to monitor a contact closure to indicate element pickup, use the Access Level 2 **SET** command to program an output contact to close when the element under test picks up.

Step 3. Gradually change the frequency of the three phase voltages. Record the phase voltage frequency applied to the relay when the SF element asserts and deasserts.

Note: You may need to either increase or decrease the applied frequency to reach the element boundaries.

SF asserted/deasserted when phase voltage frequency equaled: _____ Hz (FtestL, low boundary).

SF asserted/deasserted when phase voltage frequency equaled: _____ Hz (FtestH, high boundary).

Step 4. Use the equations below to calculate the 25SLO and 25SHI errors:

$$\text{errorL} = \left(\frac{(\text{FtestL} - \text{FNOM}) - 25\text{SLO}}{25\text{SLO}} \right) \bullet 100\%$$

errorL = _____ %

$$\text{errorH} = \left(\frac{(\text{FtestH} - \text{FNOM}) - 25\text{SHI}}{25\text{SHI}} \right) \bullet 100\%$$

errorH = _____ %

Static Phase Angle Accuracy Test

Note: This procedure uses the setup from the voltage element accuracy test. Perform the Voltage Element Accuracy Test before proceeding with the Static Phase Angle Accuracy Test.

Step 1. Configure the voltage test sources to apply balanced, three-phase voltages and synch voltage with magnitudes and phase angles as used in the voltage element accuracy test. Set the voltage source frequencies equal to the FNOM nominal frequency setting.

Step 2. The SEL-300G Relay defines voltage phase angle difference positive when VP leads VS. The 25A1, 25A2 angle elements use the magnitude of the phase angle difference rather than the absolute phase angle difference. That is, setting 25ANG2 = 10° defines a window ±10° from VS. The CFA element asserts when the magnitude of the phase angle difference is greater than the CFANGLE setting. When SLIP equals 0, the 25C element asserts when the absolute phase angle difference equals the CANGLE setting.

When performing this test manually, it is easy to determine when the angle elements pick up by viewing the element states directly using the front-panel TARGET function. Press the front-panel OTHER pushbutton, use the Down arrow button to underline the word TAR in the LCD display, then press SELECT. This command sequence causes the LCD display and lower deck of target LEDs to display individual Relay Word rows. Press the Down arrow button several times to display Relay Word Row 36, which contains the angle element indications as shown in Table 7.10.

Table 7.10: Relay Word Row 36 Shows Relay Word Bits for Angle Elements

Target LED	• 24	• 27/59	• 32	• 40	• 46	• 64G	• 81	• 87
TAR 36 Command causes these LEDs to represent:	59VP	59VS	CFA	BKRCF	BSYNCH	25C	25A1	25A2

During the manual test, as you change test voltage phase angles, you can see the CFA, 25C, 25A1, and 25A2 Relay Word bits assert and deassert to indicate pickup and dropout of the respective elements.

If you prefer to monitor a contact closure to indicate element pickup, use the Access Level 2 **SET** command to program an output contact to close when the element under test picks up.

Step 3. Gradually change the VS voltage phase angle. Reverse the sign of the phase angle and record the result when the CFA, 25C, 25A1, and 25A2 elements assert and deassert. For instance, if 25C asserts when the VS phase angle is –10°, VP is leading VS by 10°, so the recorded result should be +10° rather than –10°.

25C asserted when voltage phase angle equaled: _____ (25Ctest).
25A1 asserted when voltage phase angle equaled: _____ (25A1test1).
25A1 deasserted when voltage phase angle equaled: _____ (25A1test2).
25A2 asserted when voltage phase angle equaled: _____ (25A2test1).
25A2 deasserted when voltage phase angle equaled: _____ (25A2test2).
CFA asserted when voltage phase angle equaled: _____ (CFAtest1).
CFA deasserted when voltage phase angle equaled: _____ (CFAtest2).

Step 4. Calculate the phase angle error by adding the COMPA setting to the test result, then subtract the expected test phase angle (element setting).

Undervoltage (27) Elements

Equipment Needed

- SEL-300G Relay under test.
- Two- or Three-Phase AC Voltage Test Source with adjustable magnitude and phase angle.
- PC with terminal emulation software and appropriate serial cable to connect the PC-COM port to the relay.

Test Source Connections

When DELTA_Y = Y, connect the voltage sources according to Figure 7.9. When DELTA_Y = D, connect the voltage sources according to Figure 7.10. Current sources are not needed for this test.

Basic Element Operation

The SEL-300G offers a variety of phase, positive-sequence, and phase-to-phase undervoltage elements.

See ***Section 2: Relay Element Settings*** for complete descriptions of the available under- and overvoltage elements.

Element Pickup Accuracy Test

Step 1. Connect the voltage source(s) to the VA, VB, and VC voltage inputs referring to Figure 7.9 or Figure 7.10.

Step 2. Using the front-panel or serial port **SHO** command, note the settings associated with the voltage element under test.

Step 3. These element pickup settings are made directly in secondary volts, so they will pick up when the applied voltage magnitude is equal to the pickup setting.

Vop = _____ V secondary

When performing this test manually, it is easy to determine when an instantaneous element picks up by viewing the element state directly using the front-panel TARGET function. Press the front-panel OTHER pushbutton, use the Down arrow button to underline the word TAR in the LCD display, then press SELECT. This command sequence causes the LCD display and lower deck of target LEDs to display individual Relay Word rows. Press the Down arrow button several times to display the Relay Word row which contains the pickup indication for the voltage element under test. See ***TARGET Command*** in ***Section 10: Serial Port Communications and Commands*** for additional details.

During the manual test, as you change the test voltage magnitude, you can see Relay Word bits assert and deassert to indicate pickup and dropout of the respective elements.

If you prefer to monitor a contact closure to indicate element pickup, use the Access Level 2 **SET** command to program an output contact to close when the element under test picks up.

Step 4. When DELTA_Y = Y, test the 27P*n* elements, apply nominal (VNOM/1.73), balanced voltages to all three phases. Gradually decrease the magnitude of one-phase voltage. Record the voltage magnitude applied to the relay when the undervoltage element under test picks up.

To test the 27V1 or 27PP*n* elements, apply nominal, balanced voltages to all three phases. Gradually decrease the magnitudes of all three voltages. Record the voltage magnitude applied to the relay when the undervoltage element under test picks up.

Vtest = _____ V secondary

When DELTA_Y = Y, use the equation below to calculate the 27P*n* and 27V1 element error:

$$\text{error} = \left(\frac{\text{Vtest} - \text{Vop}}{\text{Vop}} \right) \cdot 100\%$$

When DELTA_Y = D, use the equation below to calculate the 27V1 element error:

$$\text{error} = \left(\frac{\frac{\text{Vtest}}{1.732} - \text{Vop}}{\text{Vop}} \right) \cdot 100\%$$

error = _____ %

When DELTA_Y = Y, use the equation below to calculate the 27PP*n* element error:

$$\text{error} = \left(\frac{\text{Vtest} \cdot 1.732 - \text{Vop}}{\text{Vop}} \right) \cdot 100\%$$

When DELTA_Y = D, use the equation below to calculate the 27PP*n* element error:

$$\text{error} = \left(\frac{\text{Vtest} - \text{Vop}}{\text{Vop}} \right) \cdot 100\%$$

error = _____ %

Reverse/Low-Forward Power (32) Element

Equipment Needed

- SEL-300G Relay under test.
- Two- or Three-Phase AC Voltage and Current Test Source, with adjustable magnitude and phase angle.
- PC with terminal emulation software and appropriate serial cable to connect the PC-COM port to the relay.

Test Source Connections

When DELTA_Y = Y, connect the voltage sources according to Figure 7.9. When DELTA Y= D, connect the voltage sources according to Figure 7.10.

Basic Element Operation

The SEL-300G reverse/low-forward power element is designed to detect generator motoring conditions and provide an alarm or trip. The relay measures the generator phase voltages and currents, then calculates the three-phase power in per unit of the generator nominal power using the equation:

$$\text{Power} = \frac{3 \cdot |\text{Vp}| \cdot |\text{Ip}|}{1.732 \cdot \text{VNOM} \cdot \text{INOM}} \cdot \cos(\Theta) \text{ per unit}$$

Where:

|Vp|	= measured generator phase voltage magnitude
|Ip|	= measured generator phase current magnitude
VNOM	= nominal generator phase-to-phase voltage (Relay Global Setting)
INOM	= nominal generator phase current (Relay Global Setting)
Θ	= phase angle between phase voltage and phase current (positive when current lags voltage)

The 32P1 and 32P2 elements are definite-time, reverse/low-forward power elements. If the measured three-phase power is less than the element setting, the relay asserts the 32P1 or 32P2 Relay Word bit to logical 1. If this condition continues for the associated definite-time delay, the relay asserts the 32P1T or 32P2T Relay Word bit to logical 1 (see ***Section 2: Relay Element Settings*** for a complete description of the elements).

Element Operating Accuracy Test, DELTA_Y = Y

Step 1. Make the test source connections according to Figure 7.9.

Step 2. Using the front-panel or serial port **SHO** command, note the settings associated with the relay reverse power elements:

VNOM = _____ volts (nominal phase-to-phase voltage)

INOM = _____ amps (nominal generator phase current)

E32 = Y (setting enables the reverse/low-forward power elements)

32P1P = _____ per unit reverse power (element pickup setting)

32P1D = _____ seconds (element definite-time delay)

32P2P = _____ per unit reverse power (element pickup setting)

32P2D = _____ seconds (element definite-time delay)

32PTC = _____

Torque-Control Setting (elements are enabled when 32PTC = logical 1)

Using the front-panel or serial port **SHO G** command, note the global PHROT setting:

PHROT = _____ ABC or ACB (generator phase rotation)

Step 3. This element is easiest to test by changing the test current while holding the phase-to-phase test voltage equal to VNOM. Set the test source voltage magnitudes equal to VNOM/1.732. Set the test source voltage phase angles as shown in Figure 7.7.

Set the test source current phase angles depending on the sign of the power setting for the element under test as follows:

When setting 32P*n*P > 0.0,
set angle Ia = angle Va°
set angle Ib = angle Vb°
set angle Ic = angle Vc°

When setting 32P*n*P < 0.0,
set angle Ia = angle Va – 180°
set angle Ib = angle Vb – 180°
set angle Ic = angle Vc – 180°

Use the following equation to predict the current magnitude where the element will operate.

$$Iopn = 32PnP \bullet INOM \quad \text{A secondary}$$

Iop1 = _____ A secondary
Iop2 = _____ A secondary

Table 7.11 summarizes the phase angle and operate relationships represented in Figure 7.16.

Table 7.11: Reverse Power Element Test Signal Summary

When 32P*n*P < 0:	When 32P*n*P > 0:
Set the phase angle of Ip equal to the phase angle of Vp – 180°	Set the phase angle of Ip equal to the phase angle of Vp
Relay Word bit 32P*n* is logical 1 when |Ip| > |Iopn|	Relay Word bit 32P*n* is logical 1 when |Ip| < |Iopn|

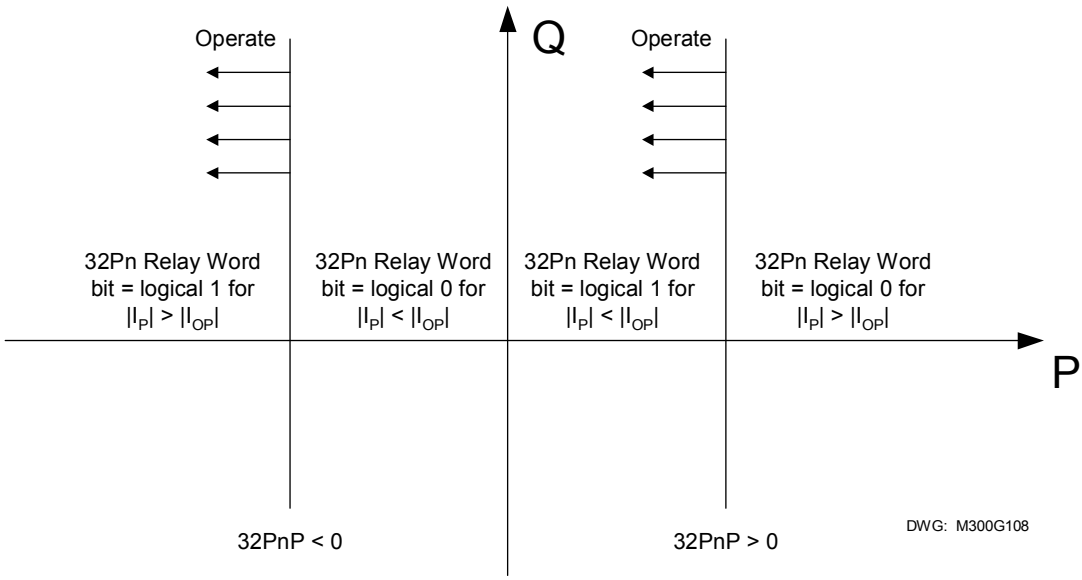

Figure 7.16: 32Pn Element Operate Region Depends on the Sign of the 32Pn Setting

When performing this test manually, it is easy to determine when an instantaneous element picks up by viewing the element state directly using the front-panel TARGET function. Press the front-panel OTHER pushbutton, use the Down arrow button to underline the word TAR in the LCD display, then press SELECT. This command sequence causes the LCD display and lower deck of target LEDs to display individual Relay Word rows. Press the Down arrow button four times to display Relay Word Row 4, which contains the reverse/low-forward power element indications, as shown in Table 7.12.

Table 7.12: Relay Word Row 4 Shows Relay Word Bits for Reverse/Low-Forward Power Elements

Target LED	• 24	• 27/59	• 32	• 40	• 46	• 64G	• 81	• 87
TAR 4 Command causes these LEDs to represent:	32PTC	32P1	32P1T	32P2	32P2T	59V1	59Q	59PP1

With balanced, three-phase voltage applied to the relay and standard settings for the 32PTC torque-control setting, the relay should display the 32PTC Relay Word bit name in the LCD display and illuminate the 24 LED, which the **TAR** command reassigns to display the 32PTC Relay Word bit state, as shown in Table 7.12. Other Relay Word bits may be asserted, depending on relay settings.

During the manual test, as you change test current magnitudes, you can see the 32P1 and 32P2 Relay Word bits assert and deassert to indicate pickup and dropout of the respective elements.

If you prefer to monitor a contact closure to indicate element pickup, use the Access Level 2 **SET** command to program an output contact to close when the element under test picks up.

Step 4. Set the test source current phase angles appropriately to test the 32P1 pickup, based on the relay settings and the information above. Turn on the current test sources and gradually increase the magnitude of all three-phase currents. Record the current magnitude applied to the relay when the instantaneous element under test asserts/deasserts. Record the current magnitude and turn off the current test sources.

Itest1= _____ A secondary

If necessary, change the test source current phase angles to test the 32P2 pickup. Turn on the current test sources and gradually increase the magnitude of all three-phase currents. Record the current magnitude applied to the relay when the instantaneous element under test asserts/deasserts. Record the current magnitude and turn off the current test sources.

Itest2= _____ A secondary

Step 5. Use the equation below to calculate the element error:

$$\text{errorn} = \left(\frac{\frac{\text{Itestn}}{\text{INOM}} - 32\text{PnP}}{32\text{PnP}} \right) \bullet 100\%$$

error1 = _____ %
error2 = _____ %

Element Operating Accuracy Test, DELTA_Y = D

Step 1. Make the test source connections according to Figure 7.10.

Step 2. Using the front-panel or serial port **SHO** command, note the settings associated with the relay reverse power elements:

VNOM = _____ volts (nominal phase-to-phase voltage)

INOM = _____ amps (nominal generator phase current)

E32 = Y (setting enables the reverse/low-forward power elements)

32P1P = _____ per unit reverse power (element pickup setting)

32P1D = _____ seconds (element definite-time delay)

32P2P = _____ per unit reverse power (element pickup setting)

32P2D = _____ seconds (element definite-time delay)

32PTC = _____
Torque-Control Setting (elements are enabled when 32PTC = logical 1)

Using the front-panel or serial port SHO G command, note the global PHROT setting:

PHROT = _____ ABC or ACB (generator phase rotation)

Step 3. This element is easiest to test by changing the test current while holding the phase-to-phase test voltages equal to VNOM. Set the test source voltage magnitudes equal to VNOM. Set the test source voltage phase angles as shown in Figure 7.8.

Set the test source current phase angles depending on the sign of the power setting for the element under test as follows:

When setting 32P*n*P > 0.0, set angle Ia = angle 0°
set angle Ib = angle –120° (120° if PHROT = C)
set angle Ic = angle 120° (–120° if PHROT = C)

When setting 32P*n*P < 0.0, set angle Ia = angle 180°
set angle Ib = angle 60° (–60° if PHROT = C)
set angle Ic = angle –60° (60° if PHROT = C)

Use the following equation to predict the current magnitude where the element will operate.

Iop*n* = 32P*n*P INOM A secondary
Iop1 = _____ A secondary
Iop2 = _____ A secondary

Table 7.11 summarizes the phase angle and operate relationships represented in Figure 7.16.

When performing this test manually, it is easy to determine when an instantaneous element picks up by viewing the element state directly using the front-panel TARGET function. Press the front-panel OTHER pushbutton, use the Down arrow button to underline the word TAR in the LCD display, then press SELECT. This command sequence causes the LCD display and lower deck of target LEDs to display individual Relay Word rows. Press the Down arrow button four times to display Relay Word

Row 4, which contains the reverse/low-forward power element indications, as shown in Table 7.12.

With balanced voltage applied to the relay and standard settings for the 32PTC torque-control setting, the relay should display the 32PTC Relay Word bit name in the LCD display and illuminate the 24 LED, which the **TAR** command reassigns to display the 32PTC Relay Word bit state, as shown in Table 7.12. Other Relay Word bits may be asserted, depending on relay settings.

During the manual test, as you change test current magnitudes, you can see the 32P1 and 32P2 Relay Word bits assert and deassert to indicate pickup and dropout of the respective elements.

If you prefer to monitor a contact closure to indicate element pickup, use the Access Level 2 **SET** command to program an output contact to close when the element under test picks up.

Step 4. Set the test source current phase angles appropriately to test the 32P1 pickup, based on the relay settings and the information above. Turn on the current test sources and gradually increase the magnitude of all three-phase currents. Record the current magnitude applied to the relay when the instantaneous element under test asserts/deasserts. Record the current magnitude and turn off the current test sources.

Itest1= _____ A secondary

If necessary, change the test source current phase angles to test the 32P2 pickup. Turn on the current test sources and gradually increase the magnitude of all three-phase currents. Record the current magnitude applied to the relay when the instantaneous element under test asserts/deasserts. Record the current magnitude and turn off the current test sources.

Itest2= _____ A secondary

Step 5. Use the equation below to calculate the element error:

$$\text{errorn} = \left(\frac{\frac{\text{Itestn}}{\text{INOM}} - 32\text{PnP}}{32\text{PnP}} \right) \cdot 100\%$$

error1 = _____ %
error2 = _____ %

Element Timing Accuracy Test

Note: This procedure uses the setup from the element pickup accuracy tests above. Perform the element pickup accuracy test before proceeding with the element timing accuracy test.

The object of the element timing accuracy test is to apply predefined signals to the relay and measure the element response time. There are two methods available to measure the element response time, SER review and output contact operation. These methods are described in ***Test Methods*** beginning on page 7-3.

32 Element Definite-Time Delay Accuracy Test

The 32P1T Relay Word bit asserts 32P1D seconds after the 32P1 element asserts. The element pickup accuracy test verified the accuracy of the 32P1P and 32P2P settings. This test applies signals within the 32P1 and 32P2 element operate regions and measures the element definite operating time.

Step 1. Based on the two timing test descriptions above (SER or output contact driving an external timer), select one method and make the settings and connections necessary to support the selection. Configure the voltage test sources to apply balanced voltages with magnitudes and phase angles as used for the element accuracy tests above (go to Step 2 **or** Step 3). Set the current phase angles as you did in the element accuracy tests.

Step 2. For 32P*n*P < 0:

Configure the current test sources to apply balanced, three-phase currents with magnitudes equal to 1.1 • Iop*n*, as determined by the test above. The element time is calculated from the instant current signals are applied to the relay until the 32P*n*T Relay Word bit asserts. Record the element operating time, Ttest*n*.

Step 3. For 32P*n*P > 0:

Configure the current test sources to apply balanced, three-phase currents with magnitudes equal to 1.1 • Iop*n*, as determined by the element accuracy test above, and turn on the current test sources. The element time is calculated from the instant current signals are removed from the relay until the 32P*n*T Relay Word bit asserts. Record the element operating time, Ttest*n*.

Step 4. Calculate the relay timing error using the equation:

$$\text{errorn} = \left(\frac{\text{Ttestn} - \text{32PnD}}{\text{32PnD}} \right) \cdot 100\%$$

error1 = _____ %
error2 = _____ %

Loss-of-Field (40) Element

Equipment Needed

- SEL-300G Relay under test.
- Two- or Three-Phase AC Voltage and Current Test Source, with adjustable magnitude and phase angle.
- PC with terminal emulation software and appropriate serial cable to connect the PC-COM port to the relay.

Test Source Connections

When DELTA_Y = Y, connect the voltage and current sources according to Figure 7.9. When DELTA_Y = D, connect the voltage and current sources according to Figure 7.10.

Basic Element Operation

The SEL-300G loss-of-field element consists of two offset phase mho zones that operate on the basis of positive-sequence impedance.

The 40Z1 and 40Z2 elements are definite-time, offset mho elements that operate using positive-sequence impedance. If the measured positive-sequence impedance falls within the mho element zone, the relay asserts the 40Z1 or 40Z2 Relay Word bit to logical 1. If this condition continues for the associated definite-time delay, the relay asserts the 40Z1T or 40Z2T Relay Word bit to logical 1 (see ***Section 2: Relay Element Settings*** for a complete element description).

Element Operating Accuracy Test

Step 1. Make test source connections according to Figure 7.9 or Figure 7.10.

Step 2. Using the front-panel or serial port **SHO** command, note the settings associated with the relay loss-of-field elements:

VNOM = _____	volts (nominal phase-to-phase voltage)
E40 = Y	(setting enables the loss-of-field elements)
40Z1P = _____	Ω secondary (Zone 1 Mho Element diameter setting)
40XD1 = _____	Ω secondary (Zone 1 Mho Element offset setting)
40Z1D = _____	seconds (Zone 1 element definite-time delay)
40Z2P = _____	Ω secondary (Zone 2 Mho Element diameter setting)
40XD2 = _____	Ω secondary (Zone 2 Mho Element offset setting)
40Z2D = _____	seconds (Zone 2 element definite-time delay)
40DIR = _____	degrees (Zone 2 directional supervision, only appears if 40XD2 > 0.0)

40ZTC = _____
Torque-Control Setting (elements are enabled when 40ZTC = logical 1)

Using the front-panel or serial port **SHO G** command, note the global PHROT and DELTA_Y setting:

PHROT = _____ ABC or ACB (generator phase rotation)
DELTA_Y = _____ Y or D (generator pt connection)

Step 3. This element is easiest to test by changing the test current while holding the phase-to-phase test voltage equal to VNOM. Set the test source voltage magnitudes equal to VNOM/1.732 (DELTA_Y = Y) or VNOM (DELTA_Y = D). Set the test source voltage phase angles as shown in Figure 7.7 or Figure 7.8.

Set the test source current phase angles as follows:

When setting PHROT = ABC, set angle Ia = 90°
set angle Ib = –30°
set angle Ic = –150°

When setting PHROT = ACB, set angle Ia = 90°
set angle Ib = –150°
set angle Ic = –30°

Refer to Figure 7.17 and Figure 7.18. In these figures, the phase current necessary to apply the test at the point indicated by the vector TestXA*n* is calculated using the following equation:

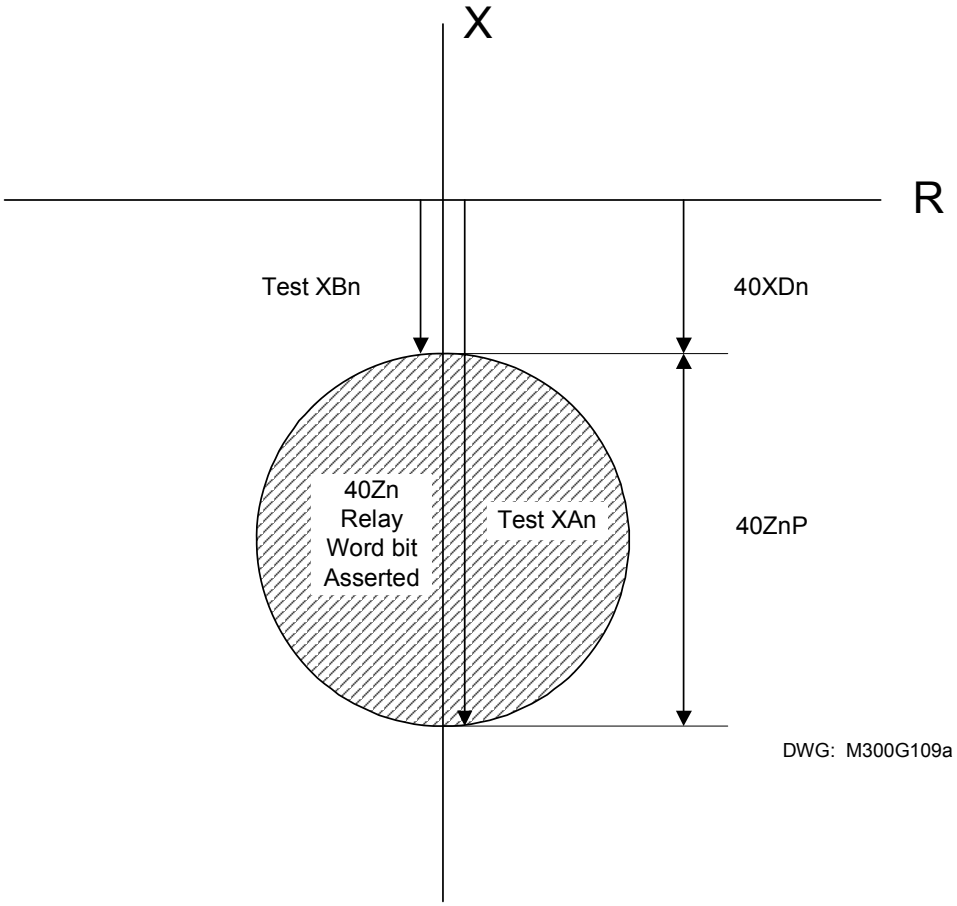

Figure 7.17: Loss-of-Field Element Diameter and Offset Tests, 40XD2 < 0

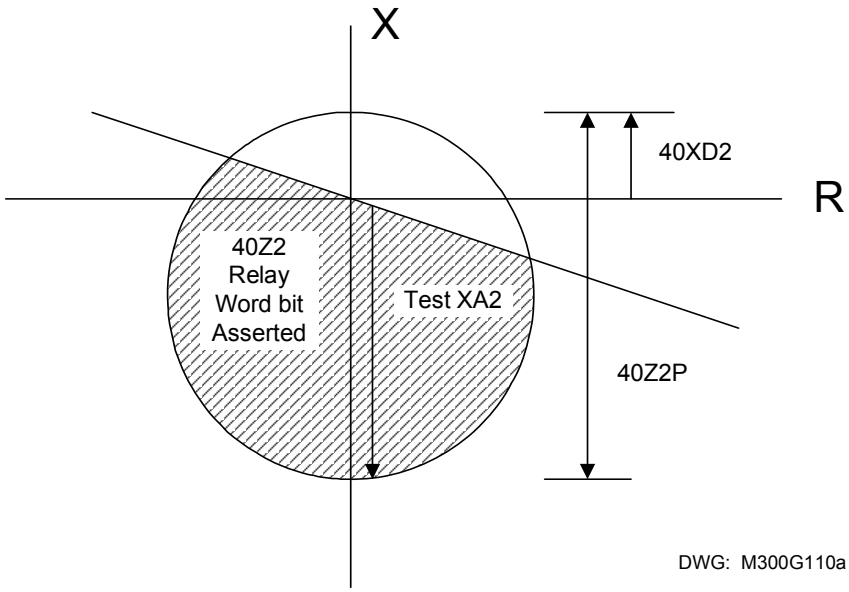

Figure 7.18: Loss-of-Field Element Diameter Test, 40XDn > 0

$$\text{IopXAn} = \frac{\text{Va}}{(40\text{ZnP} - 40\text{XDn})} \text{ A secondary} \qquad (\text{DELTA_Y = Y})$$

$$\text{IopXAn} = \frac{\text{Va}}{\sqrt{3}\cdot(40\text{ZnP} - 40\text{XDn})} \text{ A secondary} \qquad (\text{DELTA_Y = D})$$

IopXA1 = _____ A secondary
IopXA2 = _____ A secondary

In Figure 7.17 you can calculate the phase current necessary to apply the test at the point indicated by the vector TestXB*n* using the equation:

$$\text{IopXBn} = \frac{\text{Va}}{(|40\text{XDn}|)} \text{ A secondary} \qquad (\text{DELTA_Y = Y})$$

$$\text{IopXBn} = \frac{\text{Va}}{\sqrt{3}\cdot(|40\text{XDn}|)} \text{ A secondary} \qquad (\text{DELTA_Y = D})$$

IopXB1 = _____ A secondary
IopXB2 = _____ A secondary

When 40XD2 is positive, this second point on the mho circle is not available to test.

When performing this test manually, it is easy to determine when an instantaneous element picks up by viewing the element state directly using the front-panel TARGET function. Press the front-panel OTHER pushbutton, use the Down arrow button to underline the word TAR in the LCD display, then press SELECT. This command sequence causes the LCD display and lower deck of target LEDs to display individual Relay Word rows. Press the Down arrow button five times to display Relay Word Row 5, which contains the loss-of-field element indications, as shown in Table 7.13.

Table 7.13: Relay Word Row 5 Shows Relay Word Bits for Loss-of-Field Elements

Target LED	• 24	• 27/59	• 32	• 40	• 46	• 64G	• 81	• 87
TAR 5 Command causes these LEDs to represent:	40ZTC	40Z1	40Z1T	40Z2	40Z2T	SWING	SG1	SG2

With balanced, three-phase voltage applied to the relay and standard settings for the 40ZTC torque-control setting, the relay should display the 40ZTC Relay Word bit name in the LCD display and illuminate the 24 LED, which the **TAR** command reassigns to display the 40ZTC Relay Word bit state, as shown in Table 7.13. Either SG1 or SG2 will be asserted, depending on which relay setting group is active.

During the manual test, as you change test current magnitudes, you can see the 40Z1 and 40Z2 Relay Word bits assert and deassert to indicate pickup and dropout of the respective elements.

If you prefer to monitor a contact closure to indicate element pickup, use the Access Level 2 **SET** command to program an output contact to close when the element under test picks up.

Step 4. Turn on the current test sources and gradually increase the magnitude of all three-phase currents. Record the applied current magnitude when the Zone 1 and Zone 2 instantaneous elements assert.

ItestXA1 = _____ A secondary
ItestXA2 = _____ A secondary

Continue to increase the phase current magnitudes until the 40Z1 Relay Word bit deasserts. This point corresponds to the TestXB1 in Figure 7.17. Record the magnitude of the test currents at this point.

ItestXB1 = _____ A secondary

When 40XD2 is negative, also record the phase current magnitudes when the 40Z2 Relay Word bit deasserts.

ItestXB2 = _____ A secondary

When 40XD2 is positive, this second point on the mho circle is not available to test.

Step 5. Use the equations below to calculate the element error:

$$\text{errorXAn} = \left(\frac{\dfrac{\text{Va}}{\text{ItestXAn}} - (\text{40ZnP} - \text{40XDn})}{\text{40ZnP} - \text{40XDn}} \right) \cdot 100\% \qquad (\text{DELTA_Y} = \text{Y})$$

$$\text{errorXAn} = \left(\frac{\dfrac{\text{Va}}{\text{ItestXAn} \cdot \sqrt{3}} - (40\text{ZnP} - 40\text{XDn})}{40\text{ZnP} - 40\text{XDn}} \right) \cdot 100\% \qquad \text{(DELTA_Y = D)}$$

errorXA1 = _____ %
errorXA2 = _____ %

$$\text{errorXBn} = \left(\frac{\dfrac{\text{Va}}{\text{ItestXBn}} - |40\text{XDn}|}{|40\text{XDn}|} \right) \cdot 100\% \qquad \text{(DELTA_Y = Y)}$$

$$\text{errorXBn} = \left(\frac{\dfrac{\text{Va}}{\text{ItestXBn} \cdot \sqrt{3}} - |40\text{XDn}|}{|40\text{XDn}|} \right) \cdot 100\% \qquad \text{(DELTA_Y = D)}$$

errorXB1 = _____ %
errorXB2 = _____ % (applicable when 40XD2 < 0)

Step 6. **OPTIONAL.** Loss-of-Field Element Off-Diameter Test, 40XD*n* < 0. To prove the loss-of-field element mho circle characteristic, you may wish to rotate the test current phase angles a few degrees each way from 90° and retest the element pickup points. Many programmable relay test systems can be set up to take additional test points automatically. You can also perform the test manually. The calculations below require the use of a scientific calculator having square root and arcsine functions.

Referring to Figure 7.19, the first step is to calculate a test current phase angle adjustment, Θ.

Select an angle δ to define a point on the circle (δ = 30° is a good start).

δ = _____ degrees

Calculate x and y:

$$x = \frac{40\text{ZnP}}{2} \cdot \sin(2\delta)$$

x = _____ ohms

$$y = \frac{40\text{ZnP}}{2} \cdot \cos(2\delta)$$

y = _____ ohms

Calculate the magnitude of the impedance vector Z1:

$$Z1 = \sqrt{x^2 + \left[y + \frac{40ZnP}{2} + |40XDn| \right]^2}$$

Z1 = _____ ohms

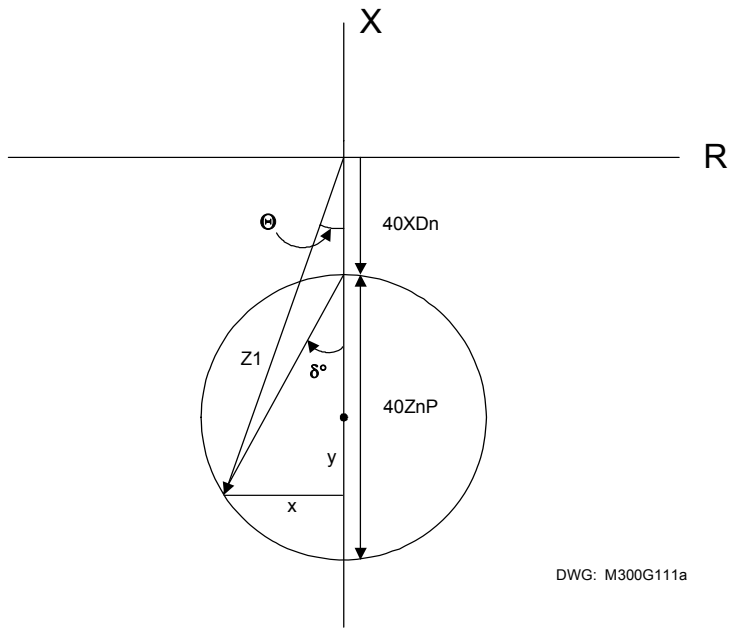

Figure 7.19: Loss-of-Field Element Off-Diameter Test, 40XDn < 0

$$\Theta n = \arcsin\left(\frac{x}{Z1}\right) \text{ degrees}$$

Θ = _____ degrees

Set the test source current phase angles as follows:

When setting PHROT = ABC, set angle Ia = 90° + Θ°
set angle Ib = –30° + Θ°
set angle Ic = –150 ° + Θ°

When setting PHROT = ACB, set angle Ia = 90° + Θ°
set angle Ib = –150° + Θ°
set angle Ic = –30° + Θ°

Next, calculate the expected pickup current magnitude:

$$IopXA = \frac{Va}{Z1} \text{ A secondary} \qquad \text{(DELTA_Y = Y)}$$

$$IopXA = \frac{Va}{\sqrt{3} \cdot Z1} \text{ A secondary} \qquad \text{(DELTA_Y = D)}$$

IopXA = _____ A secondary

For each test phase angle, increase the three-phase current magnitudes together until the element under test picks up. Record the test current magnitude.

ItestXA = _____ A secondary

You can use these equations to test Zone 1 and Zone 2 elements having negative offsets.

Use the equations below to calculate the element error:

$$errorXA = \left(\frac{\frac{Va}{ItestXAn} - Z1}{Z1} \right) \cdot 100\% \qquad \text{(DELTA_Y = Y)}$$

$$errorXA = \left(\frac{\frac{Va}{ItestXAn \cdot \sqrt{3}} - Z1}{Z1} \right) \cdot 100\% \qquad \text{(DELTA_Y = D)}$$

errorXA = _____ %

If you wish, you may repeat the test, rotating the test current phase angles by (–Θn°).

Element Timing Accuracy Test

Note: This procedure uses the setup from the Element Pickup Accuracy Test. Perform the Element Pickup Accuracy Test before proceeding with the Element Timing Accuracy Test.

The object of the Element Timing Accuracy Test is to apply predefined signals to the relay and measure the element response time. There are two methods available to measure the element response time, SER review and output contact operation. These methods are described in ***Test Methods*** beginning on page 7-3.

40 Element Definite-Time Delay Accuracy Test

The 40Z1T Relay Word bit asserts 40Z1D seconds after the 40Z1 element asserts. The Element Pickup Accuracy Test verified the accuracy of the loss-of-field element offset and diameter settings. This test applies signals within each zone and measures the element definite operating time.

Step 1. Based on the two timing test descriptions above (SER or output contact driving an external timer), select one method and make the settings and connections necessary to support the selection. Configure the voltage test sources to apply balanced, three-phase voltages with magnitudes from the previous tests.

Step 2. Set the current source phase angles as in Step 3 of the Element Accuracy Test.

Configure the current test sources to apply balanced, three-phase currents with magnitudes greater than 1.1 • ItestXA*n*, as determined by the previous test. The element time is calculated from the instant current signals are applied until the 40Z*n*T Relay Word bit asserts. Record the element operating time, Ttest*n*.

Step 3. Calculate the relay timing error using the equation:

$$\text{errorn} = \left(\frac{\text{Ttestn} - 40\text{ZnD}}{40\text{ZnD}}\right) \cdot 100\%$$

error1 = _____ %
error2 = _____ %

Negative-Sequence Overcurrent (46) Element

Equipment Needed

- SEL-300G Relay under test.
- Single-Phase AC Current Test Source, with adjustable magnitude.
- PC with terminal emulation software and appropriate serial cable to connect the PC-COM port to the relay.

Test Source Connections

Connect the current source according to Figure 7.20.

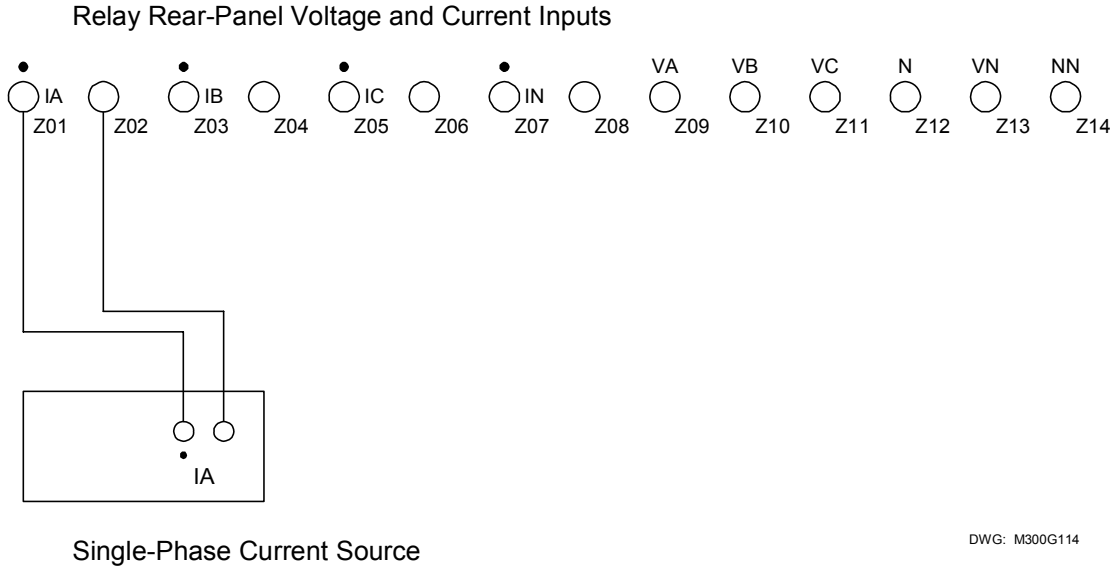

Figure 7.20: Single Current Source Test Connection

Basic Element Operation

The SEL-300G negative-sequence overcurrent element is designed to detect current unbalance in the generator. The relay measures the generator phase currents, calculates the negative-sequence current, then operates definite-time and inverse-time protection elements.

The 46Q1 element is a definite-time, negative-sequence overcurrent element typically applied as an alarm. If the measured negative-sequence current is above the 46Q1P setting, the relay asserts the 46Q1 Relay Word bit to logical 1. If this condition continues for 46Q1D seconds, the relay asserts the 46Q1T Relay Word bit to logical 1. When the unbalance condition vanishes, the relay deasserts both Relay Word bits to logical 0.

The 46Q2 element is an inverse-time negative-sequence overcurrent element with an I_2^2t operating characteristic. See ***Section 2: Relay Element Settings*** for a complete description of the element.

Element Pickup Accuracy Test

Step 1. Connect the current source to the IA, IB, or IC phase current input.

Step 2. Using the front-panel or serial port **SHO** command, note the settings associated with the relay negative-sequence overcurrent element:

INOM = _____ amps (nominal phase current)

E46 = Y (setting enables the negative-sequence overcurrent elements)

46Q1P = _____ % negative-sequence current (alarm element pickup setting)

46Q1D = _____ seconds (alarm element definite-time delay)

46Q2P = _____ % negative-sequence current (inverse-time element pickup)

46Q2K = _____ (inverse-time element time-dial)

46QTC = _____
Torque-Control Setting (elements are enabled when 46QTC = logical 1)

Step 3. To predict the test current magnitude where each element will operate, use equation:

$$\text{Iopn} = \frac{3 \cdot 46\text{QnP} \cdot \text{INOM}}{100\%} \text{ A secondary}$$

Iop1 = _____ A secondary
Iop2 = _____ A secondary

Note: With single-phase current applied, measured $|I_2| = |IA/3|$. That is why the applied current, Iop*n*, is three times the set I_2 pickup value.

When performing this test manually, it is easy to determine when an instantaneous element picks up by viewing the element state directly using the front-panel TARGET function. Press the front-panel OTHER pushbutton, use the Down arrow button to underline the word TAR in the LCD display, then press SELECT. This command sequence causes the LCD display and lower deck of target LEDs to display individual Relay Word rows. Press the Down arrow button several times to display Relay Word Row 6, which contains the negative-sequence overcurrent element indications, as shown in Table 7.14.

Table 7.14: Relay Word Row 6 Shows Relay Word Bits for Negative-Sequence Overcurrent Elements

Target LED	• 24	• 27/59	• 32	• 40	• 46	• 64G	• 81	• 87
TAR 6 Command causes these LEDs to represent:	46QTC 78R1	46Q1 78$2	46Q1T 78Z1	46Q2 OOSTC	46Q2T	46Q2R	INAD	INADT

With standard settings for the 46QTC torque-control setting, the relay should display the 46QTC and 46Q2R Relay Word bit names in the LCD display and illuminate the 24 and 64G LEDs, which the TAR command reassigns to display the 46QTC and 46Q2R Relay Word bit states, respectively, as shown in Table 7.14.

During the manual test, as you change the test current magnitude, you can see the 46Q1 and 46Q2 Relay Word bits assert and deassert to indicate pickup and dropout of the respective elements.

If you prefer to monitor a contact closure to indicate element pickup, use the Access Level 2 **SET** command to program an output contact to close when the element under test picks up.

Step 4. Gradually increase the magnitude of the test current. Record the current magnitude applied to the relay when the instantaneous element under test asserts.

Itest1 = _____ A secondary

Itest2 = _____ A secondary

Use the equation below to calculate the element error:

$$\text{errorn} = \left(\frac{\frac{\text{Itestn}}{3 \cdot \text{INOM}} \cdot 100\% - 46\text{QnP}}{46\text{QnP}} \right) \cdot 100\%$$

error1 = _____ %
error2 = _____ %

Element Timing Accuracy Test

Note: This procedure uses the setup from the Element Pickup Accuracy Test. Perform the Element Pickup Accuracy Test before proceeding with the Element Timing Accuracy Test.

The object of the Element Timing Accuracy Test is to apply predefined signals to the relay and measure the element response time. There are two methods available to measure the element response time, SER review and output contact operation. These methods are described in ***Test Methods*** beginning on page 7-3.

46Q1D Time-Delay Accuracy Test

The 46Q1T Relay Word bit asserts 46Q1D seconds after the measured negative-sequence current exceeds the 46Q1P setting. The Element Pickup Accuracy Test verified the accuracy of the 46Q1P setting. This test applies signals greater than the 46Q1P setting and measures the element definite operating time.

Step 1. Based on the two timing test descriptions above (SER or output contact driving an external timer), select one method and make the settings and connections necessary to support the selection. Configure the current test source to apply single-phase current with magnitude equal to 1.1 • Itest1, as measured by the 46Q1P test performed above.

Step 2. Expect 46Q1T to assert 46Q1D seconds after the test signals are applied.

Step 3. Apply the test current calculated in Step 1 and record the element operating time, Ttest1. Remove the test current.

Ttest1 = _____ seconds

Step 4. Calculate the relay timing error using the equation:

$$\text{error} = \left(\frac{\text{Ttest1} - \text{46Q1D}}{\text{46Q1D}} \right) \cdot 100\%$$

error = _____ %

46Q2 Inverse-Time Accuracy Test

The 46Q2 negative-sequence overcurrent element operates as an inverse-time delayed element, as shown in Figure 7.21. This test procedure uses three test points to verify that the element is operating properly.

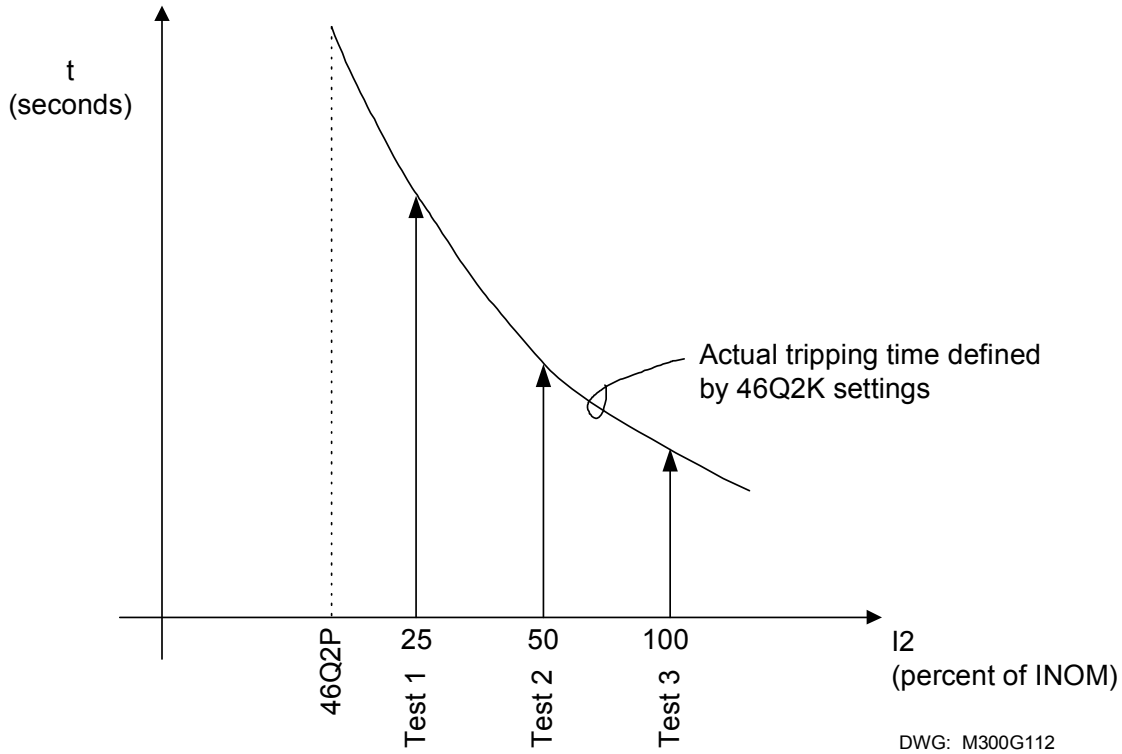

Figure 7.21: 46Q2 Inverse-Time Element Test

Step 1. Use the equations below to calculate the test current magnitudes for Test Point 1, Test Point 2, and Test Point 3.

$$Itest1 = 3 \cdot 0.25 \cdot INOM \text{ A secondary}$$
Itest1 = _____ A secondary

$$Itest2 = 3 \cdot 0.5 \cdot INOM \text{ A secondary}$$
Itest2 = _____ A secondary

$$Itest3 = 3 \cdot 1.0 \cdot INOM \text{ A secondary}$$
Itest3 = _____ A secondary

Calculate the expected operate time at each test point using the equation:

$$Topn = \frac{46Q2K}{\left(\frac{Itestn}{3 \cdot INOM}\right)^2} \text{ seconds}$$

Top1 = _____ seconds
Top2 = _____ seconds
Top3 = _____ seconds

Step 2. Based on the two timing test descriptions above (SER or output contact driving an external timer), select one method and make the settings and connections necessary to support the selection. Configure the current test source to apply single-phase current with a magnitude equal to Itest1.

Step 3. Apply the test current and record the element operating time, Ttest1. Remove the test current for at least 4 minutes to permit the element to fully reset. Repeat using Itest2 and Itest3.

Ttest1 = _____ seconds
Ttest2 = _____ seconds
Ttest3 = _____ seconds

Step 4. Calculate the relay timing errors at each test point using the equation:

$$\text{errorn} = \left(\frac{\text{Ttestn} - \text{Topn}}{\text{Topn}}\right) \cdot 100\%$$

error1 = _____ %
error2 = _____ %
error3 = _____ %

Overcurrent (50/51) Elements

Equipment Needed

- SEL-300G Relay under test.
- Single-Phase AC Current Test Source, with adjustable magnitude.
- PC with terminal emulation software and appropriate serial cable to connect the PC-COM port to the relay.

Test Source Connections

Connect the current source according to Figure 7.20.

Basic Element Operation

The SEL-300G offers a variety of phase, residual, and neutral overcurrent elements. These elements offer instantaneous, definite-time, and inverse-time operating characteristics. You can test any of the elements using a single-phase current source.

See ***Section 2: Relay Element Settings*** for complete descriptions of the available overcurrent elements.

Element Pickup Accuracy Test

Step 1. Connect the current source to the IA, IB, or IC current input to test phase or residual overcurrent elements. Connect the current source to the IN current input to test neutral overcurrent elements.

Step 2. Using the front-panel or serial port **SHO** command, note the settings associated with the overcurrent element under test.

Step 3. These overcurrent element pickup settings are made directly in secondary amps, so they will pick up when the applied current magnitude is equal to the pickup setting.

Iop = _____ A secondary

When performing this test manually, it is easy to determine when an instantaneous element picks up by viewing the element state directly using the front-panel TARGET function. Press the front-panel OTHER pushbutton, use the Down arrow button to underline the word TAR in the LCD display, then press SELECT. This command sequence causes the LCD display and lower deck of target LEDs to display individual Relay Word rows. Press the Down arrow button several times to display the Relay Word Row which contains the pickup indication for the overcurrent element under test. See ***TARGET Command*** in ***Section 10: Serial Port Communications and Commands*** for additional details.

During the manual test, as you change the test current magnitude, you can see the Relay Word bits assert and deassert to indicate pickup and dropout of the respective elements.

If you prefer to monitor a contact closure to indicate element pickup, use the Access Level 2 **SET** command to program an output contact to close when the element under test picks up.

Step 4. Gradually increase the magnitude of the test current. Record the current magnitude applied to the relay when the instantaneous element under test asserts.

Itest = _____ A secondary

Use the equation below to calculate the element error:

$$\text{error} = \left(\frac{\text{Itest} - \text{Iop}}{\text{Iop}}\right) \cdot 100\%$$

error = _____ %

Element Timing Accuracy Test

Note: This procedure uses the setup from the Element Pickup Accuracy Test. Perform the Element Pickup Accuracy Test before proceeding with the Element Timing Accuracy Test.

The object of the Element Timing Accuracy Test is to apply predefined signals to the relay and measure the element response time. There are two methods available to measure the element response time, SER review and output contact operation. These methods are described in ***Test Methods*** on page 7-3.

Definite Time-Delay Accuracy Test

The definite-time delayed overcurrent element Relay Word bit asserts a settable time after the measured current exceeds the pickup setting. The Element Pickup Accuracy Test verified the accuracy of the pickup setting. This test applies signals greater than the pickup and measures the element definite operating time.

Step 1. Based on the two timing test descriptions above (SER or output contact driving an external timer), select one method and make the settings and connections necessary to support the selection. Configure the current test source to apply single-phase current with magnitude equal to 1.1 • Itest, as measured by the previous test.

Step 2. Expect the time delayed Relay Word bit to assert after the test signals are applied. The delay should equal the element definite-time delay setting.

Step 3. Apply the test current calculated in Step 1 and record the element operating time, Ttest. Remove the test current.

Ttest = _____ seconds

Step 4. Calculate the relay timing error using the equation:

$$\text{error} = \left(\frac{\text{Ttest} - (\text{Delay_Setting})}{\text{Delay_Setting}} \right) \cdot 100\%$$

error = _____ %

Inverse-Time Accuracy Test

To test overcurrent elements having an inverse-time characteristic, this test defines three test points in the element timing characteristic.

Step 1. Use the equations below to calculate the test current magnitudes for Test Point 1, Test Point 2, and Test Point 3.

$$\text{Itest1} = 3 \cdot \text{Ipickup} \ \text{ A secondary}$$

Itest1 = _____ A secondary

$$\text{Itest2} = 5 \cdot \text{Ipickup} \ \text{ A secondary}$$

Itest2 = _____ A secondary

$$\text{Itest3} = 7 \cdot \text{Ipickup} \ \text{ A secondary}$$

Itest3 = _____ A secondary

Calculate the expected operate time at each test point using the equation defined by the element settings (see ***Overcurrent Elements*** in ***Section 2: Relay Element Settings***), and using M = 3, 5, and 7, as defined above.

Top1 = _____ seconds
Top2 = _____ seconds
Top3 = _____ seconds

Step 2. Based on the two timing test descriptions above (SER or output contact driving an external timer), select one method and make the settings and connections necessary to support the selection. Configure the current test source to apply single-phase current with a magnitude equal to Itest1.

Step 3. Apply the test current and record the element operating time, Ttest1. Remove the test current for a few minutes to permit the element to fully reset if electromechanical reset is enabled for the element under test. Repeat using Itest2 and Itest3.

Ttest1 = _____ seconds
Ttest2 = _____ seconds
Ttest3 = _____ seconds

Step 4. Calculate the relay timing errors at each test point using the equation:

$$\text{errorn} = \left(\frac{\text{Ttestn} - \text{Topn}}{\text{Topn}}\right) \cdot 100\%$$

error1 = _____ %
error2 = _____ %
error3 = _____ %

Voltage Controlled Time-Overcurrent (51C) Element

Equipment Needed

- SEL-300G Relay under test.
- Two- or Three-Phase Voltage plus a Single-Phase Current AC Test Source with adjustable magnitude and phase angle between the signals.
- PC with terminal emulation software and appropriate serial cable to connect the PC-COM port to the relay.

Test Source Connections

Connect the voltage and current sources according to Figure 7.22 or Figure 7.23.

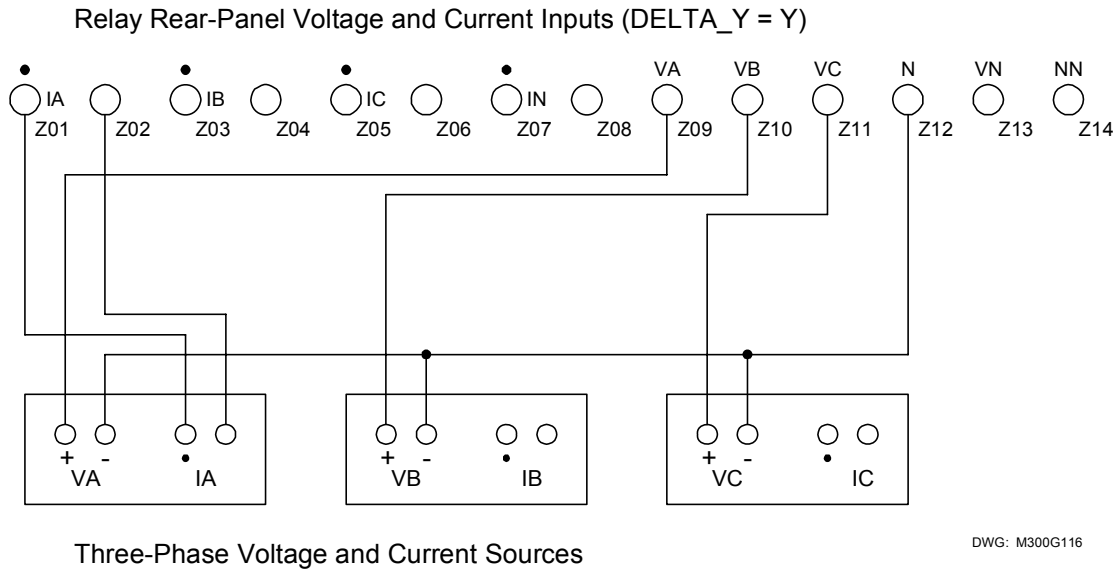

Figure 7.22: Three Voltage Sources and One Current Source Test Connections (DELTA_Y = Y)

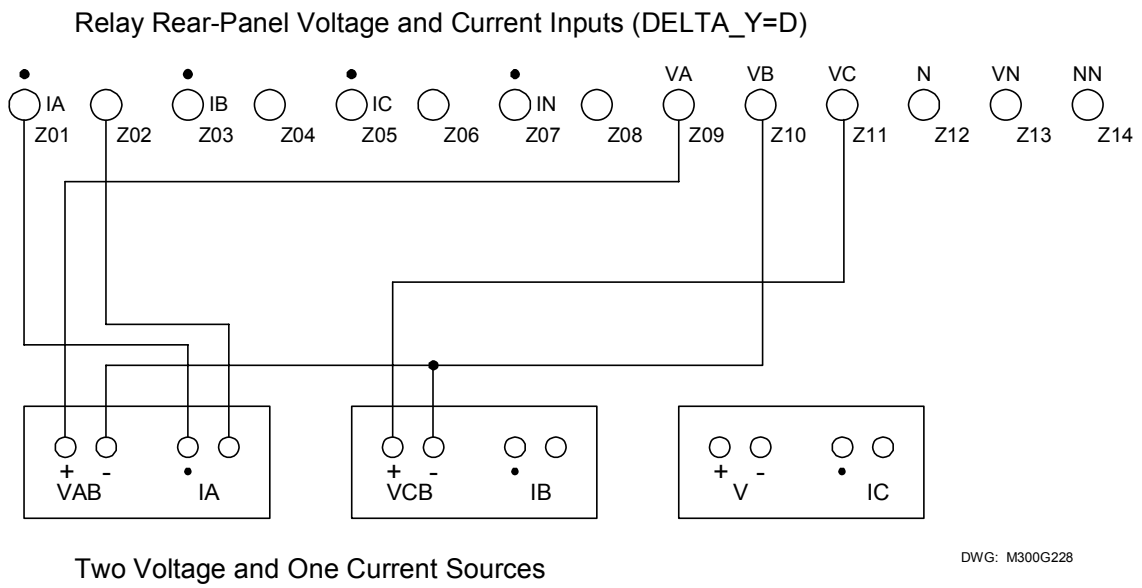

Figure 7.23: Two Voltage Sources and One Current Source Test Connections (DELTA_Y = D)

Basic Element Operation

The 51C voltage controlled phase time-overcurrent element is a phase time-overcurrent element that is typically torque-controlled by an undervoltage element, such as 27P1.

This element requires that the 51CTC torque-controlling equation result be logical 1 before the element can operate. You will use the voltage sources to satisfy the element torque-control condition, then use the current source to test the element as if it were any other time-overcurrent element.

See ***Section 2: Relay Element Settings*** for complete descriptions of the 51C voltage-controlled phase time-overcurrent element and the undervoltage elements typically used to control the 51C element.

Element Pickup Accuracy Test

Step 1. Connect the voltage and current sources according to Figure 7.22 or Figure 7.23.

Step 2. Using the front-panel or serial port **SHO** command, note the settings associated with the 51C overcurrent element.

EBUP = C	(setting enables the voltage-controlled time-overcurrent elements)
51CP = _____	A secondary (element pickup setting)
51CC = _____	(element curve selection)
51CTD = _____	(element time-dial selection)
51CRS = _____	(electromechanical reset selection)
51CTC = 27PP1 • !60LOP	

Torque-Control Setting (element is enabled when 51CTC = logical 1; typical setting shown)

Using the front-panel or serial port **SHO** command, note the pickup setting for the torque controlling undervoltage element:

27PP1 = _____ volts

Using the front-panel or serial port **SHO G** command, note the global PHROT and DELTA_Y setting:

PHROT = _____ ABC or ACB (generator phase rotation)
DELTA_Y = _____ Y or D (generator pt connection)

Step 3. Set the test source voltage magnitudes less than 27PP1. Set the test source voltage phase angles as shown in Figure 7.7.

The 51CP pickup setting is made directly in secondary amps, so the element will pick up when the applied current magnitude is equal to the pickup setting.

Iop = _____ A secondary

When performing this test manually, it is easy to determine when an instantaneous element picks up by viewing the element state directly using the front-panel TARGET function. Press the front-panel OTHER pushbutton, use the Down arrow button to underline the word TAR in the LCD display, then press SELECT. This command sequence causes the LCD display and lower deck of target LEDs to display individual Relay Word rows. Press the Down arrow button several times to display Relay Word Row 7, which contains the voltage controlled phase time-overcurrent element indications, as shown in Table 7.15.

Table 7.15: Relay Word Row 7 Shows Relay Word Bits for Voltage Controlled Time-Overcurrent Elements

Target LED	• 24	• 27/59	• 32	• 40	• 46	• 64G	• 81	• 87
TAR 7 Command causes these LEDs to represent:	*	*	*	*	51CTC	51C	51CT	51CR

With voltage applied as described above, the relay should display the 51CTC and 51CR Relay Word bit names in the LCD display and illuminate the 46 and 87 LEDs, which the **TAR** command reassigns to display the 51CTC and 51CR Relay Word bit states, respectively, as shown in Table 7.15.

During the manual test, as you change the test current magnitude, you can see the 51C Relay Word bit asserts and deasserts to indicate pickup and dropout of the element.

If you prefer to monitor a contact closure to indicate element pickup, use the Access Level 2 **SET** command to program an output contact to close when the element under test picks up.

Step 4. Gradually increase the magnitude of the test current. Record the current magnitude applied to the relay when the instantaneous element under test asserts.

Itest = _____ A secondary

Use the equation below to calculate the element error:

$$\text{error} = \left(\frac{\text{Itest} - \text{Iop}}{\text{Iop}}\right) \cdot 100\%$$

error = _____ %

Element Timing Accuracy Test

Note: This procedure uses the setup from the Element Pickup Accuracy Test. Perform the Element Pickup Accuracy Test before proceeding with the Element Timing Accuracy Test.

The object of the Element Timing Accuracy Test is to apply predefined signals to the relay and measure the element response time. There are two methods available to measure the element response time, SER review and output contact operation. These methods are described in ***Test Methods*** on page 7-3.

Inverse-Time Accuracy Test

To test 51C overcurrent element inverse-time characteristic, this test procedure uses three test points to verify that the element is operating properly.

Step 1. Use the equations below to calculate the test current magnitudes for Test Point 1, Test Point 2, and Test Point 3.

$$\text{Itest1} = 3 \cdot 51\text{CP} \quad \text{A secondary}$$
Itest1 = _____ A secondary

$$\text{Itest2} = 5 \cdot 51\text{CP} \quad \text{A secondary}$$
Itest2 = _____ A secondary

$$\text{Itest3} = 7 \cdot 51\text{CP} \quad \text{A secondary}$$
Itest3 = _____ A secondary

Calculate the expected operate time at each test point using the equation defined by the element settings (see ***Overcurrent Elements*** in ***Section 2: Relay Element Settings***), and using M = 3, 5, and 7 as defined above.

Top1 = _____ seconds
Top2 = _____ seconds
Top3 = _____ seconds

Step 2. Based on the two timing test descriptions above (SER or output contact driving an external timer), select one method and make the settings and connections necessary to support the selection. Configure the current test source to apply single-phase current with magnitude equal to Itest1. Apply balanced voltages as in Step 3 of the element pickup accuracy test.

Step 3. Apply the test current and record the element operating time, Ttest1. Remove the test current for a few minutes to permit the element to fully reset if electromechanical reset is enabled (51CRS = Y). Repeat using Itest2 and Itest3.

Ttest1 = _____ seconds
Ttest2 = _____ seconds
Ttest3 = _____ seconds

Step 4. Calculate the relay timing errors at each test point using the equation:

$$\text{errorn} = \left(\frac{\text{Ttestn} - \text{Topn}}{\text{Topn}}\right) \cdot 100\%$$

error1 = _____ %
error2 = _____ %
error3 = _____ %

Voltage Restrained Time-Overcurrent (51V) Element

Equipment Needed

- SEL-300G Relay under test.
- Two- or Three-Phase AC Voltage and Current Test Source with adjustable magnitude and phase angle.
- PC with terminal emulation software and appropriate serial cable to connect the PC-COM port to the relay.

Test Source Connections

Connect the voltage and current sources according to Figure 7.9 or Figure 7.10.

Basic Element Operation

The 51V voltage restrained phase time-overcurrent element's pickup setting (51VP) is reduced depending on the magnitude of the applied phase-phase voltage. The relationship between element pickup current and phase-phase voltage is linear. If the phase-phase voltage magnitude is 50 percent of VNOM, the actual 51V element pickup current is 50 percent of the set 51VP value.

See ***Section 2: Relay Element Settings*** for a complete description of the 51V voltage-restrained phase time-overcurrent element.

Element Pickup Accuracy Test

Step 1. Connect the voltage and current sources according to Figure 7.9 or Figure 7.10.

Step 2. Using the front-panel or serial port **SHO** command, note the settings associated with the 51V overcurrent element.

VNOM = _____	volts (generator nominal phase-to-phase voltage)
EBUP = V	(setting enables the voltage restrained time-overcurrent elements)

51VCA = _____ Compensation Angle (0, –30, +30 deg)

51VP = _____ A secondary (element pickup setting)

51VC = _____ (element curve selection)

51VTD = _____ (element time-dial selection)

51VRS = _____ (electromechanical reset selection)

51VTC = !60LOP

Torque-Control Setting (element is enabled when 51VTC = logical 1; typical setting shown)

Using the front-panel or serial port **SHO G** command, note the global PHROT and DELTA_Y setting:

PHROT = _____ ABC or ACB (generator phase rotation)
DELTA_Y = _____ Y or D (generator pt connection)

Step 3. Set the test source voltage magnitudes equal to VNOM/1.732 when DELTA_Y = Y or equal to VNOM when DELTA_Y = D. Set the test source voltage phase angles as shown in Figure 7.7 or Figure 7.8. Note that balanced 3-phase voltage and current test values are used for the following tests. The phase angle between IA and VA (or VAB) may be any value.

The 51VP pickup setting is made directly in secondary amps. However, the actual pickup is adjusted by the ratio of the applied voltage to the nominal voltage, as shown in the equation below. To verify the linear nature of the element voltage restraint characteristic, test the pickup at three different voltage levels.

$$\text{Iop1} = \text{51VP} \ \text{ A secondary}$$

$$\text{Vop1} = \frac{\text{VNOM}}{1.732} \ \text{ V secondary} \qquad \text{(DELTA_Y = Y)}$$

$$\text{Vop1} = \text{VNOM} \ \text{ V secondary} \qquad \text{(DELTA_Y = D)}$$

Iop1 = _____ A secondary

Vop1 = _____ V secondary

$$\text{Iop2} = \text{51VP} \cdot 0.75 \ \text{ A secondary}$$

$$\text{Vop2} = 0.75 \cdot \frac{\text{VNOM}}{1.732} \ \text{ V secondary} \qquad \text{(DELTA_Y = Y)}$$

$$\text{Vop2} = 0.75 \cdot \text{VNOM} \ \text{ V secondary} \qquad \text{(DELTA_Y = D)}$$

Iop2 = _____ A secondary

Vop2 = _____ V secondary

$$\text{Iop3} = \text{51VP} \cdot 0.5 \ \text{ A secondary}$$

$$Vop3 = 0.5 \cdot \frac{VNOM}{1.732} \text{ V secondary} \qquad \text{(DELTA_Y = Y)}$$

$$Vop3 = 0.5 \cdot VNOM \text{ V secondary} \qquad \text{(DELTA_Y = D)}$$

Iop3 = _____ A secondary

Vop3 = _____ V secondary

When performing this test manually, it is easy to determine when 51V function picks up (51V Relay Word bit asserts) by using the front-panel TARGET function. Press the front-panel OTHER pushbutton, use the Down arrow button to underline the word TAR in the LCD display, then press SELECT. This command sequence causes the LCD display and lower deck of target LEDs to display individual Relay Word rows. Press the Down arrow button several times to display Relay Word Row 9, which contains the voltage restrained phase time-overcurrent element indications, as shown in Table 7.16.

Table 7.16: Relay Word Row 9 Shows Relay Word Bits for the Voltage Restrained Time-Overcurrent Elements

Target LED	• 24	• 27/59	• 32	• 40	• 46	• 64G	• 81	• 87
TAR 9 Command causes these LEDs to represent:	51VTC	51V	51VT	51VR	PDEM	QDEM	GDEM	NDEM

With voltage applied as described above, the relay should display the 51VTC and 51VR Relay Word bit names in the LCD display, and illuminate the 24 and 40 LEDs, which the **TAR** command reassigns to display the 51VTC and 51VR Relay Word bit states, respectively, as shown in Table 7.16.

During the manual test, as you change the test current magnitude, you can see that the 51V Relay Word bit asserts and deasserts to indicate pickup and dropout of the element.

If you prefer to monitor a contact closure to indicate element pickup, use the Access Level 2 **SET** command to program an output contact to close when the element under test picks up.

Step 4. Apply balanced 3-phase voltage with magnitude Vop1. Gradually increase the magnitude of the balanced 3-phase test current. Record the current magnitude applied to the relay when the 51V element asserts.

Itest1 = _____ A secondary

Repeat for Vop2 and Vop3.

Itest2 = _____ A secondary
Itest3 = _____ A secondary

Use the equation below to calculate the element error:

$$\text{errorn} = \left(\frac{\text{Itestn} - \text{Iopn}}{\text{Iopn}} \right) \cdot 100\%$$

error1 = _____ %
error2 = _____ %
error3 = _____ %

Element Timing Accuracy Test

Note: This procedure uses the setup from the Element Pickup Accuracy Test. Perform the Element Pickup Accuracy Test before proceeding with the Element Timing Accuracy Test.

The object of the Element Timing Accuracy Test is to apply predefined signals to the relay and measure the element response time. There are two methods available to measure the element response time, SER review and output contact operation. These methods are described in ***Test Methods*** on page 7-3.

Inverse-Time Accuracy Test

To test 51V overcurrent element inverse-time characteristic, this test procedure uses three test points to verify that the element is operating properly.

Step 1. Use the equations below to calculate the test current magnitudes for Test Point 1, Test Point 2, and Test Point 3.

$\text{Itest1} = 3 \cdot 51\text{VP}$ A secondary
Itest1 = _____ A secondary

$\text{Itest2} = 5 \cdot 51\text{VP}$ A secondary
Itest2 = _____ A secondary

$\text{Itest3} = 7 \cdot 51\text{VP}$ A secondary
Itest3 = _____ A secondary

Calculate the expected operate time at each test point using the equation associated with the 51VC setting (see ***Overcurrent Elements*** in ***Section 2: Relay Element Settings***), and using M = 3, 5, and 7, as defined above.

Top1 = _____ seconds
Top2 = _____ seconds
Top3 = _____ seconds

Step 2. Choose one of the two timing test methods (SER or output contact driving an external timer), and make the settings and connections necessary to support the selection. Apply balanced 3-phase currents with magnitudes equal to Itest1. Apply balanced

3-phase voltages magnitudes set equal to VNOM/1.732 volts (DELTA_Y = Y) or VNOM (DELTA_Y = D).

Step 3. Apply the test current Itest1 and record the element operating time, Ttest1. Remove the test current long enough to permit the element to fully reset if electromechanical reset is enabled (51VRS = Y). Repeat using Itest2 and Itest3.

Ttest1 = _____ seconds
Ttest2 = _____ seconds
Ttest3 = _____ seconds

Step 4. Calculate the relay timing errors at each test point using the equation:

$$\text{errorn} = \left(\frac{\text{Ttestn} - \text{Topn}}{\text{Topn}}\right) \cdot 100\%$$

error1 = _____ %
error2 = _____ %
error3 = _____ %

Step 5. To verify the element-timing characteristic under reduced voltage conditions, select one reduced voltage.

Vr = _____ phase-phase V secondary 0.125 < (Vr/VNOM) < 1.0

Calculate new Itest quantity using the equations:

$$Itest1 = \left(\frac{1.732 \cdot Vr}{VNOM}\right) \cdot 3 \cdot 51VP \text{ A secondary} \qquad \text{(DELTA_Y = Y)}$$

$$Itest1 = \left(\frac{Vr}{VNOM}\right) \cdot 3 \cdot 51VP \text{ A secondary} \qquad \text{(DELTA_Y = D)}$$

Itest1 = _____ A secondary

$$Itest2 = \left(\frac{1.732 \cdot Vr}{VNOM}\right) \cdot 5 \cdot 51VP \text{ A secondary} \qquad \text{(DELTA_Y = Y)}$$

$$Itest2 = \left(\frac{Vr}{VNOM}\right) \cdot 5 \cdot 51VP \text{ A secondary} \qquad \text{(DELTA_Y = D)}$$

Itest2 = _____ A secondary

$$Itest3 = \left(\frac{1.732 \cdot Vr}{VNOM}\right) \cdot 7 \cdot 51VP \text{ A secondary} \qquad \text{(DELTA_Y = Y)}$$

$$Itest3 = \left(\frac{Vr}{VNOM}\right) \cdot 7 \cdot 51VP \text{ A secondary} \qquad \text{(DELTA_Y = D)}$$

Itest3 = _____ A secondary

Apply balanced 3-phase currents with magnitudes equal to Itest1(2,3). Apply balanced 3-phase voltages magnitudes set equal to Vr/1.732 volts (DELTA_Y = Y) or Vr (DELTA_Y = D). These test values will result in the same expected operate times calculated in Step 1 above.

Overvoltage (59) Elements

Equipment Needed

- SEL-300G Relay under test.
- Single-Phase AC Voltage Test Source with adjustable magnitude.
- PC with terminal emulation software and appropriate serial cable to connect the PC-COM port to the relay.

Test Source Connections

Connect the voltage source according to Figure 7.24 (DELTA_Y = Y) or Figure 7.25 (DELTA_Y = D).

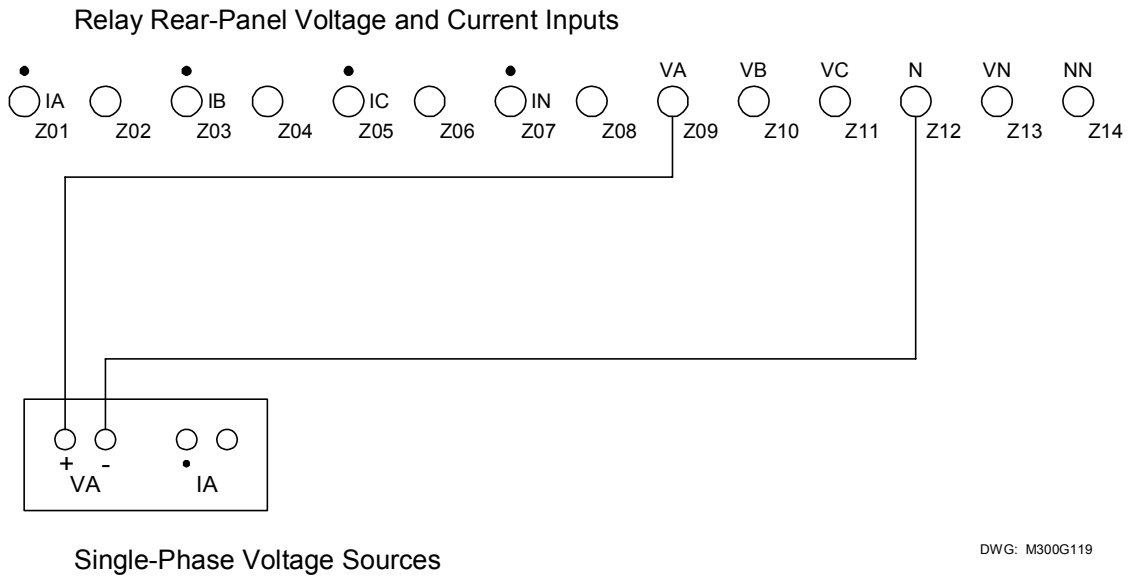

Figure 7.24: One Voltage Source Test Connection (DELTA_Y = Y)

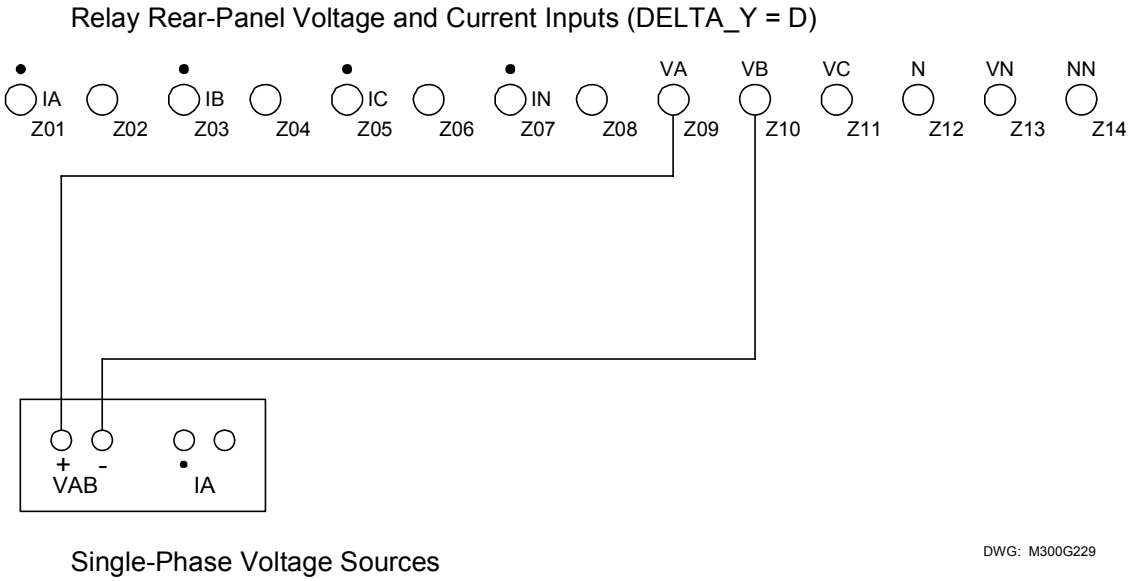

Figure 7.25: One Voltage Source Test Connection (DELTA_Y = D)

Basic Element Operation

The SEL-300G offers a variety of phase, phase-to-phase, positive-sequence, negative-sequence, and residual overvoltage elements. You can test any of the elements using a single-phase voltage source.

See ***Section 2: Relay Element Settings*** for a complete description of the available overvoltage elements.

Element Pickup Accuracy Test

Step 1. Connect the voltage source to the VA, VB, VC, VAB, or VBC voltage input.

Step 2. Using the front-panel or serial port **SHO** command, note the settings associated with the voltage element under test.

Step 3. These element pickup settings are made directly in secondary volts. 59P1, 59P2, 59G1, 59G2, 59PP1, and 59PP2 will pick up when the applied voltage magnitude is equal to the pickup setting. 59Q and 59V1 operate for applied single-phase voltage equal to three times their settings.

Vop = _____ V secondary

When performing this test manually, it is easy to determine when an instantaneous element picks up by viewing the element state directly using the front-panel TARGET function. Press the front-panel OTHER pushbutton, use the Down arrow button to underline the word TAR in the LCD display, then press SELECT. This command sequence causes the LCD display and lower deck of target LEDs to display individual Relay Word rows. Press the Down arrow button several times to display the Relay Word row which contains the pickup indication for the voltage element under test. See ***TARGET Command*** in ***Section 10: Serial Port Communications and Commands*** for additional details.

During the manual test, as you change the test voltage magnitude, you can see Relay Word bits assert and deassert to indicate pickup and dropout of the respective elements.

If you prefer to monitor a contact closure to indicate element pickup, use the Access Level 2 **SET** command to program an output contact to close when the element under test picks up.

Step 4. Gradually increase the magnitude of the test voltage. Record the voltage magnitude applied to the relay when the overvoltage element under test picks up.

Vtest = _____ V secondary

Use the equation below to calculate the element error:

$$\text{error} = \left(\frac{\text{Vtest} - \text{Vop}}{\text{Vop}}\right) \cdot 100\%$$

error = _____ %

100% Stator Ground (64) Element

Equipment Needed

- SEL-300G Relay under test.
- Single-Phase AC Voltage Test Source with adjustable magnitude for 64G1 element test.
- Two Single-Phase AC Voltage Test Sources with adjustable magnitude and frequency for 64G2 element test (64RAT $\neq$ 0).
- Four Single-Phase AC Voltage Test Sources with adjustable magnitude, phase angles, and frequency for 64G2 element test (64RAT = 0).
- PC with terminal emulation software and appropriate serial cable to connect the PC-COM port to the relay.

Basic Element Operation

64G1 Element Operation

The 64G1 element is a fundamental frequency neutral overvoltage element with a definite-time delay.

64G2 Element Operation, 64RAT $\neq$ 0

In the standard application, the 64G2 element 64RAT setting is set to a nonzero value. In this case, the element acts as a third-harmonic voltage differential element. The relay measures the third-harmonic voltage at the phase voltage inputs and the neutral voltage input. The relay then multiplies the phase measurement third-harmonic magnitude by the 64RAT setting and takes the difference between the result and the neutral measurement. The relay asserts the 64G2 Relay Word bit if the difference is greater than the 64G2P setting. This element also includes a definite-time delay.

64G2 Element Operation, 64RAT = 0

In some applications, particularly when DELTA_Y = D, the 64RAT setting is set to zero. In this case, the 64G2 element operates as a neutral third-harmonic undervoltage element supervised by positive-sequence voltage measured at the phase voltage inputs.

See ***Section 2: Relay Element Settings*** for additional details on the operation of the 100% Stator Ground Protection Elements.

64G1 Element Operating Accuracy Test

Step 1. Connect the voltage sources according to Figure 7.26.

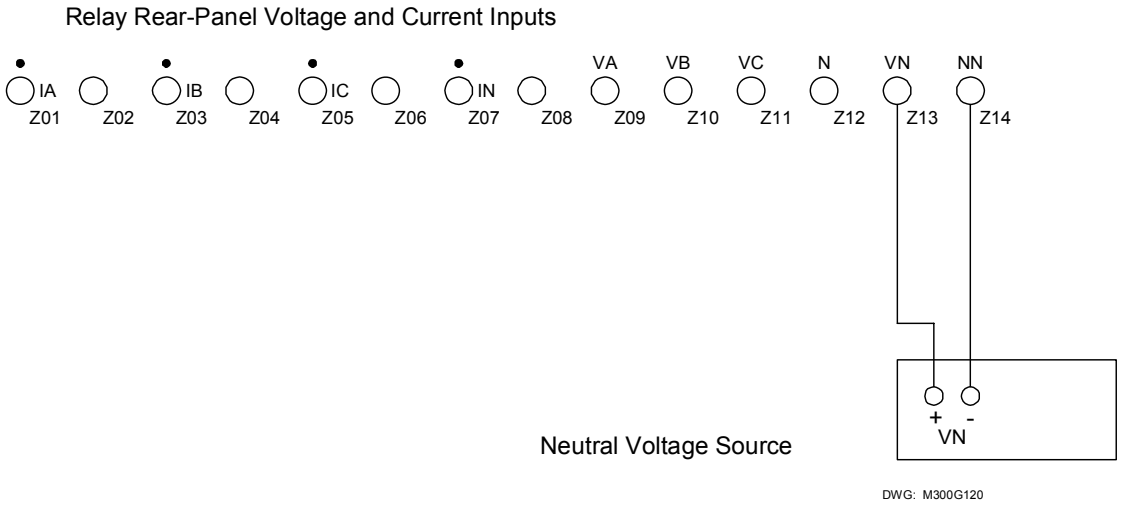

Figure 7.26: Neutral Voltage Test Connection, 64G1

Step 2. Using the front-panel or serial port **SHO** command, note the settings associated with the 64G1 elements:

E64 = Y (setting enables the 100% Stator Ground Elements)

64G1P = _____ V secondary (neutral overvoltage element setting)

64G1D = _____ seconds (neutral overvoltage time delay)

•

•

•

64GTC = _____

Torque-Control Setting (element is enabled when 64GTC = logical 1)

Using the front-panel or serial port **SHO G** command, note the global FNOM setting:

FNOM = _____ Hz (nominal generator frequency)

Step 3. The 64G1 element picks up when the neutral voltage exceeds the 64G1P setting.

When performing this test manually, it is easy to determine when an instantaneous element picks up by viewing the element state directly using the front-panel TARGET

function. Press the front-panel OTHER pushbutton, use the Down arrow button to underline the word TAR in the LCD display, then press SELECT. This command sequence causes the LCD display and lower deck of target LEDs to display individual Relay Word rows. Press the Down arrow button several times to display Relay Word Row 12, which contains the 64G element indications, as shown in Table 7.16.

Table 7.16: Relay Word Row 12 Shows Relay Word Bits for 64G Elements

Target LED	• 24	• 27/59	• 32	• 40	• 46	• 64G	• 81	• 87
TAR 12 Command causes these LEDs to represent:	64GTC	64G1	64G1T	64G2	64G2T	OOS	60LOP	CLEN

During the manual test, as you change the test voltage, you can see the Relay Word bits assert and deassert to indicate pickup and dropout of the respective elements.

If you prefer to monitor a contact closure to indicate element pickup, use the Access Level 2 **SET** command to program an output contact to close when the element under test picks up.

Step 4. Set the test source frequency equal to FNOM. Gradually increase the test voltage magnitude to approach the pickup setting of the 64G1 element. Record the test voltage applied to the relay when the 64G1 Relay Word bit asserts.

Vtest = _____ volts

Use the equation below to calculate the element error:

$$\text{error} = \left(\frac{\text{Vtest} - \text{64G1P}}{\text{64G1P}}\right) \cdot 100\%$$

error = _____ %

64G1 Element Timing Accuracy Test

Note: This procedure uses the setup from the Element Pickup Accuracy Test. Perform the Element Pickup Accuracy Test before proceeding with the Element Timing Accuracy Test.

The object of the Element Timing Accuracy Test is to apply predefined signals to the relay and measure the element response time. There are two methods available to measure the element response time, SER review and output contact operation. These methods are described in ***Test Methods*** on page 7-3.

The 64G1T Relay Word bit asserts 64G1D seconds after the measured neutral voltage exceeds the 64G1P pickup setting. The Element Pickup Accuracy Test verified the accuracy of the pickup settings. This test only measures the element definite operating time.

Step 1. Based on the two timing test descriptions above (SER or output contact driving an external timer), select one method and make the settings and connections necessary to support the selection. Configure the voltage test source to apply voltage with magnitude equal to 1.1 • Vtest volts.

Step 2. Expect 64G1T to assert 64G1D seconds after the test signal is applied.

Step 3. Apply the test voltage calculated in Step 1 and record the element operating time, Ttest. Remove the test voltage.

Ttest = _____ seconds

Step 4. Calculate the relay timing error using the equation:

$$\text{error} = \left(\frac{\text{Ttest} - \text{64G1D}}{\text{64G1D}}\right) \cdot 100\%$$

error = _____ %

64G2 Element Operating Accuracy Test, 64RAT ≠ 0

Step 1. Connect the voltage sources according to Figure 7.27.

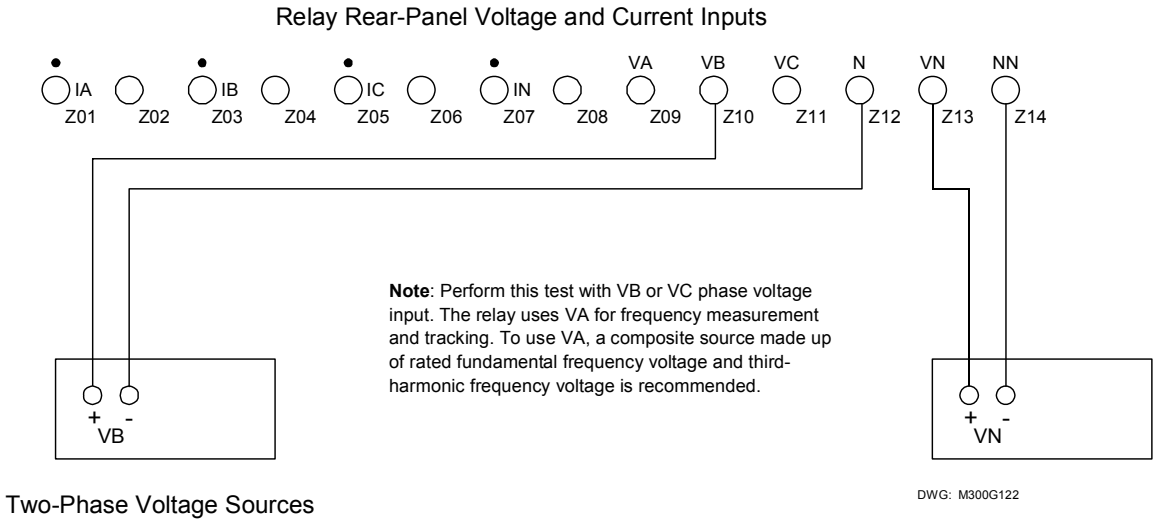

Figure 7.27: 64G2 Element Test Connections, 64RAT ≠ 0

Step 2. Using the front-panel or serial port **SHO** command, note the settings associated with the 64G2 elements:

E64 = Y (setting enables the 100% Stator Ground Elements)

64G2P = _____ V secondary (third-harmonic voltage differential element setting)

64RAT = _____ (third-harmonic voltage ratio setting)

64G2D = _____ seconds (third-harmonic voltage differential time delay)

64GTC = _____
Torque-Control Setting (element is enabled when 64GTC = logical 1)

Using the front-panel or serial port **SHO G** command, note the global FNOM setting:

FNOM = _____ Hz (nominal generator frequency)

Step 3. The 64G2 element picks up when the third-harmonic voltage difference, VDIFF, exceeds the 64G2P setting, as defined by the following equation:

$$\text{Vdiff} = \left| 64\text{RAT} \cdot \left| \text{VP3} \right| - \left| \text{VN3} \right| \right|$$

Set the frequency of both voltage sources equal to 3 • FNOM. Set the magnitude of the test source connected to the VN input equal to (2 • 64G2P) volts. Set the magnitude of the test source connected to the phase voltage input equal to (2 • 64G2P)/64RAT.

Calculate the expected VN magnitudes at which the element should operate. Use the equations:

$$\text{VN} \le 64\text{G2P} \text{ and } \text{VN} \ge 3.0 \cdot 64\text{G2P}$$

VN = _____ V secondary

When performing this test manually, it is easy to determine when an instantaneous element picks up by viewing the element state directly using the front-panel TARGET function. Press the front-panel OTHER pushbutton, use the Down arrow button to underline the word TAR in the LCD display, then press SELECT. This command sequence causes the LCD display and lower deck of target LEDs to display individual Relay Word rows. Press the Down arrow button several times to display Relay Word Row 12, which contains the 64G element indications, as shown in Table 7.16.

During the manual test, as you change the test voltage, you can see the Relay Word bits assert and deassert to indicate pickup and dropout of the respective elements.

If you prefer to monitor a contact closure to indicate element pickup, use the Access Level 2 **SET** command to program an output contact to close when the element under test picks up.

Step 4. Gradually decrease the neutral voltage magnitude. Record the test voltage applied to the relay when the 64G2 Relay Word bit asserts.

VNtest = _____ volts

Use the equation below to calculate the element error:

$$\% \text{ error} = \frac{(64G2P - VNtest)}{64G2P} \cdot 100$$

% error = _____

64G2 Element Timing Accuracy Test, 64RAT ≠ 0

Note: This procedure uses the setup from the Element Pickup Accuracy Test. Perform the Element Pickup Accuracy Test before proceeding with the Element Timing Accuracy Test.

The object of the Element Timing Accuracy Test is to apply predefined signals to the relay and measure the element response time. There are two methods available to measure the element response time, SER review and output contact operation. These methods are described in ***Test Methods*** beginning on page 7-3.

The 64G2T Relay Word bit asserts 64G2D seconds after the measured third-harmonic differential voltage exceeds the 64G2P pickup setting. The Element Pickup Accuracy Test verified the accuracy of the pickup settings. This test measures the element definite operating time.

Step 1. Based on the two timing test descriptions above (SER or output contact driving an external timer), select one method and make the settings and connections necessary to support the selection. Configure the voltage test sources to apply neutral and phase voltages with magnitudes as calculated in Step 3 above. Configure the neutral voltage test source to switch from 5 volts to a voltage magnitude equal to 0.9 • Vtest volts, as determined in Step 4, above.

Step 2. Expect 64G2T to assert 64G2D seconds after the test signal is applied.

Step 3. Apply the test voltage calculated in Step 1 and record the element operating time, Ttest. Remove the test voltages.

Ttest = _____ seconds

Step 4. Calculate the relay timing error using the equation:

$$\text{error} = \left(\frac{Ttest - 64G2D}{64G2D}\right) \cdot 100\%$$

error = _____ %

64G2 Element Operating Accuracy Test, 64RAT = 0

Step 1. Connect the voltage sources according to Figure 7.28.

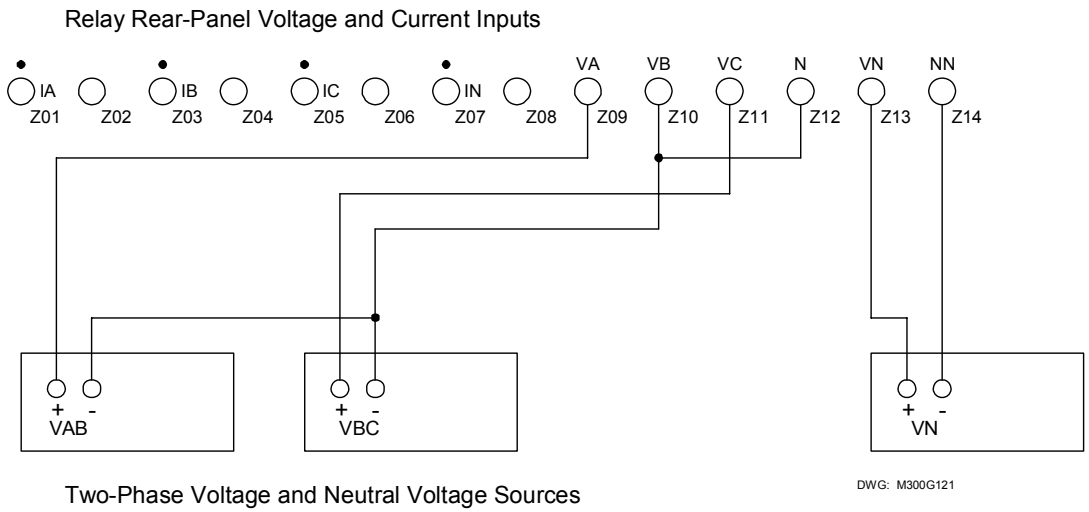

Figure 7.28: 64G2 Element Test Connections, 64RAT = 0 (DELTA_Y = D)

Step 2. Using the front-panel or serial port **SHO** command, note the settings associated with the 64G2 elements:

VNOM = _____	volts (nominal generator phase-to-phase voltage)
E64 = Y	(setting enables the 100% Stator Ground Elements)
64G2P = _____	V secondary (third-harmonic voltage differential element setting)
64RAT = 0	(third-harmonic voltage ratio setting)
64G2D = _____	seconds (third-harmonic voltage differential time delay)

64GTC = _____
Torque-Control Setting (element is enabled when 64GTC = logical 1)

Using the front-panel or serial port **SHO G** command, note the global FNOM, PHROT, and DELTA_Y settings:

FNOM = _____ Hz (nominal generator frequency)
PHROT = _____ ABC or ACB (generator phase rotation)
DELTA_Y = _____ Y or D (generator pt connections)

Step 3. The 64G2 element picks up when the neutral third-harmonic voltage falls below the 64G2P setting.

Set the frequency of the phase voltage sources equal to FNOM. Set the magnitudes of the phase voltage sources equal to VNOM. Set the phase test source phase angles as shown in Figure 7.7 or Figure 7.8, DELTA_Y = D.

Set the neutral voltage test source frequency equal to 3 • FNOM. Set the magnitude of the test source connected to the VN input greater than the 64G2P setting.

Calculate the expected element operate voltage using the equation:

Vop = 64G2P

Vop = _____ V secondary

When performing this test manually, it is easy to determine when an instantaneous element picks up by viewing the element state directly using the front-panel TARGET function. Press the front-panel OTHER pushbutton, use the Down arrow button to underline the word TAR in the LCD display, then press SELECT. This command sequence causes the LCD display and lower deck of target LEDs to display individual Relay Word rows. Press the Down arrow button several times to display Relay Word Row 12, which contains the 64G element indications, as shown in Table 7.16.

During the manual test, as you change the test voltage, you can see the Relay Word bits assert and deassert to indicate pickup and dropout of the respective elements.

If you prefer to monitor a contact closure to indicate element pickup, use the Access Level 2 **SET** command to program an output contact to close when the element under test picks up.

Step 4. Gradually decrease the neutral voltage magnitude. Record the test voltage applied to the relay when the 64G2 Relay Word bit asserts.

Vtest = _____ volts

Use the equation below to calculate the element error:

$$\text{error} = \left(\frac{\text{Vtest} - \text{64G2P}}{\text{64G2P}}\right) \cdot 100\%$$

error = _____ %

64G2 Element Timing Accuracy Test, 64RAT = 0

Note: This procedure uses the setup from the Element Pickup Accuracy Test. Perform the Element Pickup Accuracy Test before proceeding with the Element Timing Accuracy Test.

The object of the Element Timing Accuracy Test is to apply predefined signals to the relay and measure the element response time. There are two methods available to measure the element response time, SER review and output contact operation. These methods are described in ***Test Methods*** beginning on page 7-3.

The 64G2T Relay Word bit asserts 64G2D seconds after the measured neutral third-harmonic voltage falls below the 64G2P pickup setting. The Element Pickup Accuracy Test verified the accuracy of the pickup settings. This test measures the element definite operating time.

Step 1. Based on the two timing test descriptions above (SER or output contact driving an external timer), select one method and make the settings and connections necessary to support the selection. Configure the voltage test sources to apply neutral and phase voltages with magnitudes as calculated in Step 3 above. Configure the neutral voltage test source to switch from the original magnitude to a voltage magnitude equal to 0.9 • Vtest volts, as determined in Step 4, above.

Step 2. Expect 64G2T to assert 64G2D seconds after the test signal is applied.

Step 3. Apply the test voltage calculated in Step 1 and record the element operating time, Ttest. Remove the test voltages.

Ttest = _____ seconds

Step 4. Calculate the relay timing error using the equation:

$$\text{error} = \left(\frac{\text{Ttest} - \text{64G2D}}{\text{64G2D}} \right) \cdot 100\%$$

error = _____ %

Out-of-Step (78) Element—Single Blinder

Equipment Needed

- SEL-300G Relay under test.
- Two- or Three-Phase AC Voltage and Current Test Source, with adjustable magnitude.
- PC with terminal emulation software and appropriate serial cable to connect the PC-COM port to the relay.

Test Source Connections

When DELTA_Y = Y, connect the voltage and current sources according to Figure 7.9. When DELTA_Y = D, connect the voltage and current sources according to Figure 7.10.

Basic Element Operation

The single blinder scheme, shown in Figure 7.29, consists of mho element 78Z1, right blinder 78R1, and left blinder 78R2. This scheme detects an out-of-step condition by tracking the path of positive-sequence impedance trajectories that pass through the protection zone. If the relay detects an out-of-step condition, it asserts the following Relay Word bits:

Relay Word bit SWING picks up when the positive-sequence impedance moves from the load region into Area A (left blinder 78R2 and mho element 78Z1 assert).

Relay Word bit OOS picks up when the impedance trajectory advances further to Area B between the two blinders (right blinder 78R1, left blinder 78R2, and mho element 78Z1 assert).

At the time the impedance trajectory exits the mho circle via Area C, the rising-edge triggered timer with 78TD pickup delay and 78TDURD dropout-delay starts timing. Relay Word bit OOST remains picked up for 78TDURD seconds after the pickup delay time 78TD expires.

The above description is only for trajectories traveling from right to left. Out-of-step trajectories traveling from left to right traverse the protection zone in the reverse sequence (i.e., from Area C to B to A). The Relay Word bits assert in the same way whether trajectories travel from right to left or from left to right.

See ***Section 2: Relay Element Settings*** for a complete element description.

78Z1 Element Operating Accuracy Test

Step 1. Make test source connections according to Figure 7.9 or Figure 7.10.

Step 2. Using the front-panel or serial port **SHO** command, note the settings associated with the out-of-step elements:

VNOM = _____	volts (nominal phase-to-phase voltage)
E78 = 1B	(setting enables the out-of-step elements)
78FWD = _____	Ω secondary (forward reach setting)
78REV = _____	Ω secondary (reverse reach setting))
78R1 = _____	Ω secondary (right blinder setting)
78R2 = _____	Ω secondary (left blinder setting)

Using the front-panel or serial port **SHO G** command, note the global PHROT and DELTA_Y setting:

PHROT = _____	ABC or ACB (generator phase rotation)
DELTA_Y = _____	Y or D (generator PT connection)

Step 3. This element is easiest to test by changing the test current while holding test voltage equal to VNOM. Set the test source voltage magnitudes equal to VNOM/1.732 (DELTA_Y) or VNOM (DELTA_Y = D). Set the test source voltage phase angles as shown in Figure 7.7 or Figure 7.8.

Set the test source current phase angles as follows:

When setting PHROT = ABC,	set angle Ia = 90°
	set angle Ib = –30°
	set angle Ic = –150°
When setting PHROT = ACB,	set angle Ia = 90°
	set angle Ib = –150°
	set angle Ic = –30°

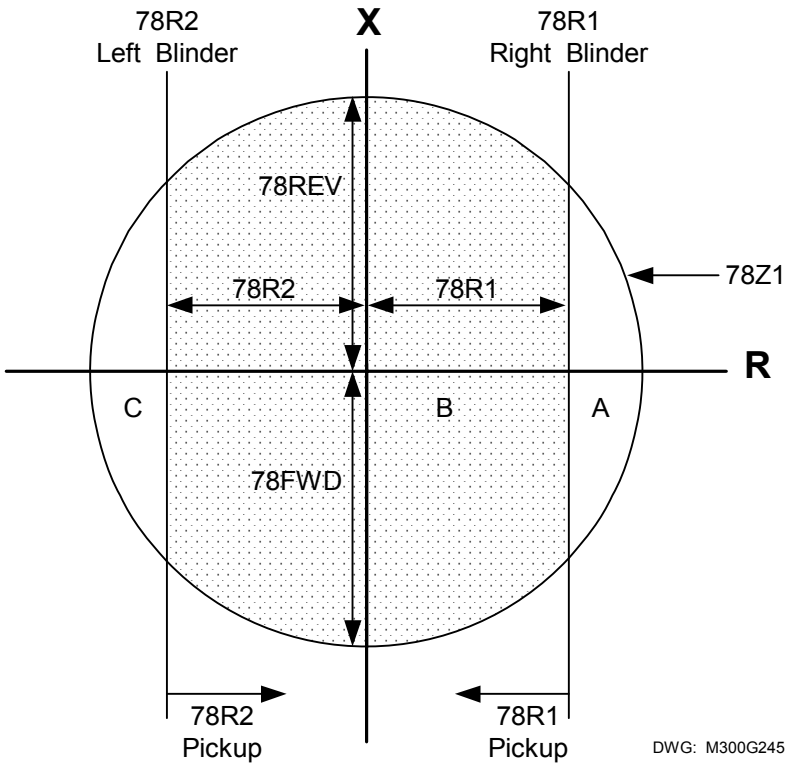

Figure 7.29: Out-of-Step Single Blinder Element, Diameter and Blinder Tests

Refer to Figure 7.29. With these current angle settings, 78Z1 element picks up if the ratio of voltage to current is less than or equal to the forward reach 78FWD (ohms) of the mho circle.

Expected value:

$$\text{Iop78Z1} = \frac{\text{Va}}{\text{78FWD setting}} \qquad \text{(DELTA_Y = Y)}$$

$$\text{Iop78Z1} = \frac{\text{Va}}{\sqrt{3} \cdot \text{78FWD setting}} \qquad \text{(DELTA_Y = D)}$$

Expected Iop78Z1 = _____ A secondary

Step 4. Turn on the current test sources and gradually increase the magnitude of all three phase currents. Record the applied current magnitude when the 78Z1 element asserts.

Itest78Z1 = _____ A secondary

Step 5. Use the equations below to calculate the element error:

$$\text{error78Z1} = \frac{\left[\dfrac{\text{Va}}{\text{Itest78Z1}} - \text{78FWD setting}\right]}{\text{78FWD setting}} \cdot 100\% \qquad \text{(DELTA_Y = Y)}$$

$$\text{error78Z1} = \frac{\left[\dfrac{\text{Va}}{(\text{Itest78Z1})\cdot\sqrt{3}} - \text{78FWD setting}\right]}{\text{78FWD setting}}\cdot 100\% \qquad \text{(DELTA_Y = D)}$$

error78Z1 = _____%

78R1 Element (Right Blinder) Operating Accuracy Test

Step 1. Make test source connections according to Figure 7.9 or Figure 7.10.

Step 2. Using the front-panel or serial port **SHO** command note the settings associated with the out-of-step single blinder element. Using the front-panel or serial port **SHO G** command note the global PHROT and DELTA_Y setting.

PHROT = _____ ABC or ACB (generator phase rotation)

DELTA_Y = _____ Y or D (generator PT connection)

Step 3. This element is easiest to test by changing the test current while holding the test voltage equal to VNOM. Set the test source voltage magnitude equal to VNOM\1.732 (DELTA_Y = Y) or VNOM (DELTA_Y = D).

Set the test source voltage phase angles as shown in Figure 7.7 or Figure 7.8.

Set the test source current phase angles as follows:

When setting PHROT = ABC, set angle Ia = 0°

set angle Ib = –120°

set angle Ic = 120°

When setting PHROT = ACB, set angle Ia = 0°

set angle Ib = 120°

set angle Ic = –120°

Refer to Figure 7.29. In this figure 78R1 element will pick up if the ratio of voltage and current applied is equal to or less than the ohmic value of 78R1.

Expected value:

$$\text{Iop78R1} = \frac{\text{Va}}{\text{78R1 ohms}} \qquad \text{(DELTA_Y = Y)}$$

$$\text{Iop78R1} = \frac{\text{Va}}{\sqrt{3}\cdot\text{78R1 ohms}} \qquad \text{(DELTA_Y = D)}$$

Expected Iop78R1 = _____ A secondary

Step 4. Turn on the current test source and gradually increase the magnitude of all three-phase currents. Record the applied current magnitude when the 78R1 element asserts.

Itest78R1 =_____ A secondary

Step 5. Use the equations below to calculate the element error:

$$\text{error78R1} = \frac{\left[\frac{\text{Va}}{\text{Itest78R1}} - \text{78R1 setting}\right]}{\text{78R1 setting}} \cdot 100\% \qquad \text{(DELTA_Y = Y)}$$

$$\text{error78R1} = \frac{\left[\frac{\text{Va}}{(\text{Itest78R1}) \cdot \sqrt{3}} - \text{78R1 setting}\right]}{\text{78R1 setting}} \cdot 100\% \qquad \text{(DELTA_Y = D)}$$

error78R1 = _____%

78R2 Element (Left Blinder) Operating Accuracy Test

To test 78R2, the test current should be displaced by 180° from the test current used in the 78R1 Operating Accuracy Test. For example, if the injected current Ia used for testing 78R1 was in phase with Va, the Ia used for testing 78R2 should be displaced by 180°.

Follow Steps 1 through 3 from the 78R1 Element Operating Accuracy Test on the preceding page. Follow Steps 4 and 5 below to complete the 78R2 element test.

Step 1. Turn on the current test source and gradually increase the magnitude of all three-phase currents. Record the applied current magnitude when the 78R2 element asserts.

Itest78R2 = _____ A secondary

Step 2. Use the equation below to calculate the element error:

$$\text{error78R2} = \frac{\left[\frac{\text{Va}}{\text{Itest78R2}} - \text{78R2 setting}\right]}{\text{78R2 setting}} \cdot 100\% \qquad \text{(DELTA_Y = Y)}$$

$$\text{error78R2} = \frac{\left[\frac{\text{Va}}{(\text{Itest78R2}) \cdot \sqrt{3}} - \text{78R2 setting}\right]}{\text{78R2 setting}} \cdot 100\% \qquad \text{(DELTA_Y = D)}$$

error78R2 = _____%

Note that during the accuracy test for the 78R1 other elements such as 78R2 and 78Z1 will assert prior to the assertion of 78R1. For purposes of accuracy testing for 78R1, ignore assertions of other elements. Similarly, during the accuracy test for the 78R2 other elements such as 78R1 and 78Z1 will assert prior to the assertion of 78R2.

Out-of-Step (78) Element—Double Blinder

Equipment Needed

- SEL-300G Relay under test.
- Two- or Three-Phase AC Voltage and Current Test Source, with adjustable magnitude.
- PC with terminal emulation software and appropriate serial cable to connect the PC-COM port to the relay.

Test Source Connections

When DELTA_Y = Y, connect the voltage and current sources according to Figure 7.9. When DELTA_Y = D, connect the voltage and current sources according to Figure 7.10.

Basic Element Operation

The double blinder scheme, shown in Figure 7.30, consists of mho element 78Z1 and two blinder pairs: outer resistance blinder 78R1 and inner resistance blinder 78R2. This scheme uses timer 78D as part of its logic to detect out-of-step conditions. The scheme declares an out-of-step condition if the positive-sequence impedance stays between the two blinders for more than 78D seconds and advances further inside the inner blinder. The logic issues an out-of-step trip once an out-of-step condition is established and the positive-sequence impedance exits the mho circle.

If the relay detects an out-of-step condition, it asserts the following Relay Word bits:

Relay Word bit SWING picks up when the positive-sequence impedance stays between the outer and inner blinders for more than 78D seconds (78R1 asserts, mho element 78Z1 may or may not assert).

Relay Word bit OOS picks up when the impedance trajectory advances further inside the inner blinder (78R1, 78R2, and mho element 78Z1 assert).

At the time the impedance trajectory exits the mho circle, the rising-edge triggered timer with 78TD pickup delay and 78TDURD dropout delay starts timing. Relay Word bit OOST remains picked up for 78TDURD seconds after pickup delay time 78TD expires.

See ***Section 2: Relay Element Settings*** for a complete element description.

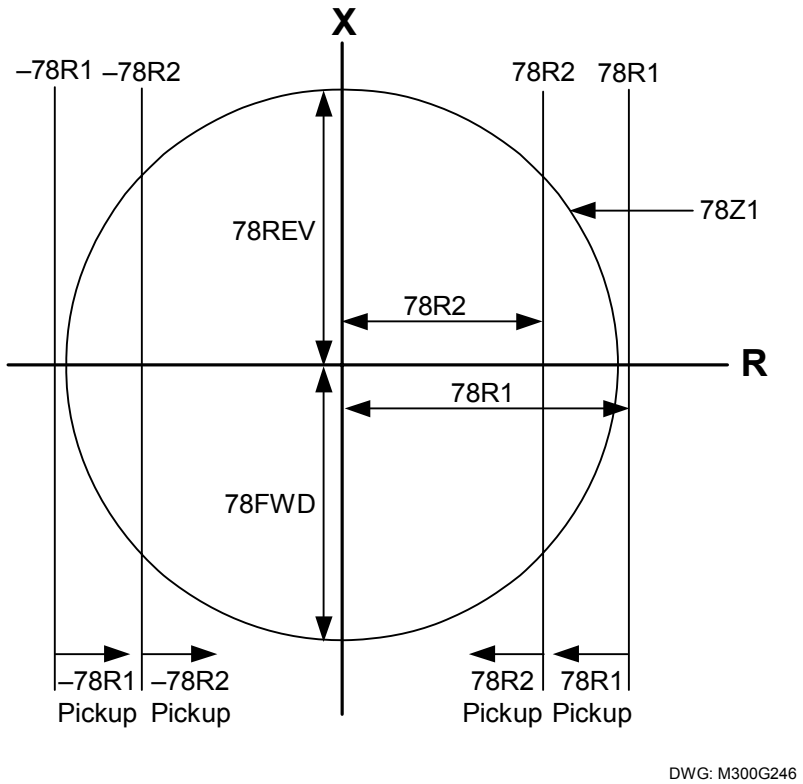

Figure 7.30: Out-of-Step Double Blinder Element, Diameter and Blinder Tests

The 78Z1 Element Operating Accuracy Test, 78R1, and 78R2 follows the same steps and procedure as listed in ***Out-of-Step (78) Element—Single Blinder*** on page 7-89.

Over/underfrequency (81) Elements

Equipment Needed

- SEL-300G Relay under test.
- Three-Phase AC Voltage Test Source with adjustable magnitude, phase angles, and frequency.
- PC with terminal emulation software and appropriate serial cable to connect the PC-COM port to the relay.

Test Source Connections

Connect the voltage sources according to Figure 7.9 or Figure 7.10. Current sources are not required for this test.

Basic Element Operation

The SEL-300G over/underfrequency elements measure the frequency of the voltage applied to the relay. Underfrequency operation is defined when an element pickup setting is less than the nominal generator frequency setting, FNOM. Overfrequency operation is defined when the

pickup setting is greater than FNOM. Frequency element operation is blocked when any phase voltage is less than the 27B81P undervoltage element setting.

Element Pickup Accuracy Test

Step 1. Connect the voltage sources according to Figure 7.9 or Figure 7.10. Current sources are not required for this test.

Step 2. Using the front-panel or serial port **SHO** command, note the settings associated with the frequency elements:

VNOM = _____	volts (nominal phase-to-phase voltage)
E81 = 1–6	(setting enables a number of frequency elements)
27B81P = _____	V secondary (undervoltage element setting)
81D1P = _____	hertz (Level 1 pickup frequency)
81D1D = _____	seconds (Level 1 time delay)
81D2P = _____	hertz (Level 1 pickup frequency)
81D2D = _____	seconds (Level 1 time delay)
81D3P = _____	hertz (Level 1 pickup frequency)
81D3D = _____	seconds (Level 1 time delay)
81D4P = _____	hertz (Level 1 pickup frequency)
81D4D = _____	seconds (Level 1 time delay)
81D5P = _____	hertz (Level 1 pickup frequency)
81D5D = _____	seconds (Level 1 time delay)
81D6P = _____	hertz (Level 1 pickup frequency)
81D6D = _____	seconds (Level 1 time delay)

Using the front-panel or serial port **SHO G** command, note the global FNOM, PHROT, and DELTA_Y settings:

FNOM = _____ Hz (nominal generator frequency)
PHROT = _____ ABC or ACB (generator phase rotation)
DELTA_Y = _____ Y or D (generator pt connection)

Set the test source voltage magnitudes equal to VNOM/1.732 (DELTA_Y = Y) or VNOM (DELTA_Y = D). Set the test source voltage phase angles as shown in Figure 7.7 or Figure 7.8.

Step 3. To predict the test frequency where each element will operate, simply note the 81DnP pickup setting.

When performing this test manually, it is easy to determine when an instantaneous element picks up by viewing the element state directly using the front-panel TARGET function. Press the front-panel OTHER pushbutton, use the Down arrow button to underline the word TAR in the LCD display, then press SELECT. This command sequence causes the LCD display and lower deck of target LEDs to display individual

Relay Word rows. Press the Down arrow button several times to display Relay Word Row 14, which contains the frequency element indications, as shown in Table 7.17.

Table 7.17: Relay Word Row 14 Shows Relay Word Bits for Frequency Elements

Target LED	• 24	• 27/59	• 32	• 40	• 46	• 64G	• 81	• 87
TAR 14 Command causes these LEDs to represent:	81D1	81D2	81D3	81D4	81D5	81D6	3PO	52A

During the manual test, as you change the test frequency, you can see the Relay Word bits assert and deassert to indicate pickup and dropout of the respective elements.

If you prefer to monitor a contact closure to indicate element pickup, use the Access Level 2 **SET** command to program an output contact to close when the element under test picks up.

Step 4. Gradually change the voltage source frequency to approach the pickup setting of the element under test. Record the test frequency applied to the relay when the instantaneous element under test asserts.

Ftest = _____ hertz

Use the equation below to calculate the element error:

error = Ftest – 81DnP
error = _____ hertz

Element Timing Accuracy Test

Note: This procedure uses the setup from the Element Pickup Accuracy Test. Perform the Element Pickup Accuracy Test before proceeding with the Element Timing Accuracy Test.

The object of the Element Timing Accuracy Test is to apply predefined signals to the relay and measure the element response time. There are two methods available to measure the element response time, SER review and output contact operation. These methods are described in ***Test Methods*** beginning on page 7-3.

81DnD Time-Delay Accuracy Test

The 81D*n*T Relay Word bit asserts 81D*n*D seconds after the measured frequency falls below the element underfrequency setting or climbs above the element overfrequency setting. The Element Pickup Accuracy Test verified the accuracy of the pickup settings. This test measures the element definite operating time.

Step 1. Based on the two timing test descriptions above (SER or output contact driving an external timer), select one method and make the settings and connections necessary to

support the selection. Configure the voltage test sources to apply phase voltage with magnitude equal to VNOM/1.732 volts (DELTA_Y = Y) or VNOM volts (DELTA_Y = D) and frequency equal to:

1.1 • Ftest for an overfrequency element under test

or

0.9 • Ftest for an underfrequency element under test

Step 2. Expect 81D*n*T to assert 81D*n*D seconds after the test signals are applied.

Step 3. Apply the test voltages calculated in Step 1 and record the element operating time, Ttest. Remove the test voltages.

Ttest = _____ seconds

Step 4. Calculate the relay timing error using the equation:

$$\text{error} = \left(\frac{\text{Ttest} - \text{81DnD}}{\text{81DnD}} \right) \cdot 100\%$$

error = _____ %

Ground Differential (87N) Element

Equipment Needed

- SEL-300G Relay under test.
- Two AC Current Test Sources with adjustable magnitude.
- PC with terminal emulation software and appropriate serial cable to connect the PC-COM port to the relay.

Test Source Connections

Connect the current sources according to Figure 7.31.

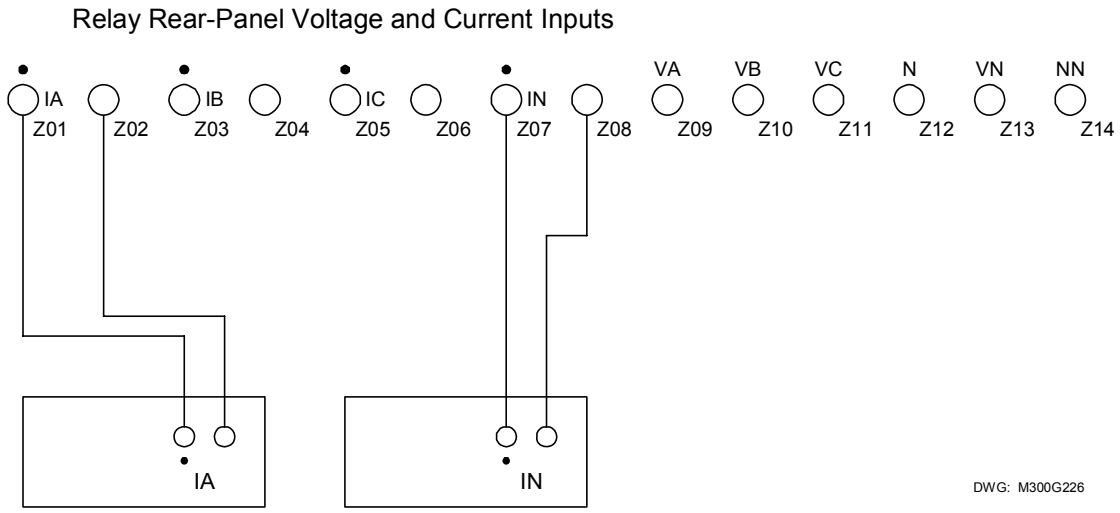

Figure 7.31: 87N Test Connections

Basic Element Operation

The SEL-300G ground differential element detects generator ground faults on solidly or low-impedance grounded generators by calculating the difference between the neutral current and the residual current. When a generator ground fault occurs between the phase current transformers and the neutral current transformer, the difference current will be nonzero. When an external ground fault occurs, the difference current is zero. Thus, the relay does not trip for external ground faults, but can sensitively detect most internal ground faults. The relay ground differential element picks up when I87N, the ground difference current, is greater than the 87N element pickup setting. The relay calculates I87N using the equation:

$$I87N = \left| \frac{IG \cdot CTR}{CTRN} - IN \right| \text{A secondary}$$

where:

I87N	= round difference current
IG	= Measured residual current (IA + IB + IC)
IN	= Measured neutral current
CTR	= Phase CT Ratio
CTRN	= Neutral CT Ratio

The 87N1T and 87N2T are definite-time ground differential elements. If measured difference current exceeds the 87N1P setting, the relay asserts the 87N1P Relay Word bit to logical 1. If this condition continues for 87N1D seconds, the relay asserts the 87N11T Relay Word bit to logical 1. After the excessive current condition vanishes, the relay deasserts both Relay Word bits to logical 0. The 87N2P and 87N2T Relay Word bits operate similarly (see ***Section 13: Differential Element Settings*** for a complete description of the element).

Element Pickup Accuracy Test

Step 1. Make test source connections according to Figure 7.31. Voltage sources are not required for this test and may be left disconnected.

Step 2. Using the front-panel or serial port **SHO** command, note the settings associated with the relay volts/hertz element:

CTR = _____	phase current transformer ratio to 1
CTRN = _____	neutral current transformer ratio to 1
E87N = Y	(setting enables the ground differential elements)
87N1P = _____	amps secondary (element pickup setting)
87N1D = _____	seconds (element definite-time delay)
87N2P = _____	amps secondary (element pickup setting)
87N2D = _____	seconds (element definite-time delay)

87NTC = _____
Torque-Control Setting (elements are enabled when 87NTC = logical 1)

Step 3. This element is easiest to test by increasing neutral current until the element picks up. To prove differential operation, you can then increase the phase current while holding the neutral current constant until the element drops out.

To predict the test neutral current magnitude where the element will operate, use equation:

$$IN_{op} = 87NnP \text{ A secondary}$$

This calculation assumes that applied phase current is zero.

When performing this test manually, it is easy to determine when an instantaneous element picks up by viewing the element state directly using the front-panel TARGET function. Press the front-panel OTHER pushbutton, use the Down arrow button to underline the word TAR in the LCD display, then press SELECT. This command sequence causes the LCD display and lower deck of target LEDs to display individual Relay Word rows. Press the Down arrow button twice to display Relay Word Row 38, which contains the volts/hertz ground differential element indications as shown in Table 7.18.

Table 7.18: Relay Word Row 38 Shows Relay Word Bits for Ground Differential Elements

Target LED	• 24	• 27/59	• 32	• 40	• 46	• 64G	• 81	• 87
TAR 38 Command causes these LEDs to represent:	87NTC	87N1P	87N1T	87N2P	87N2T	MPP1P	MABC1P	27VS

With standard settings for the 87NTC torque-control setting, the relay should display the 87NTC Relay Word bit names in the LCD display and illuminate the 24 LED as shown in Table 7.18.

During the manual test, as you change test current magnitudes, you can see the 87N1P, 87N2P, 87N1T, and 87N2T Relay Word bits assert and deassert to indicate pickup and dropout of the respective elements.

If you prefer to monitor a contact closure to indicate element pickup, use the Access Level 2 **SET** command to program an output contact to close when the element under test picks up.

Step 4. Gradually increase the magnitude of applied neutral current. Record the current magnitude applied to the relay when the instantaneous element under test asserts.

87N1P asserted when neutral current magnitude equaled: _____ A secondary (Atest1).

Next, gradually increase the magnitude of applied phase current. Make sure that the phase angle settings for the phase and neutral current are equal. Record the phase current magnitude applied to the relay when the instantaneous element under test deasserts.

87N1P deasserted when phase current magnitude equaled: _____ A secondary (Atest2).

Use the equation below to calculate the element error using Atest1:

$$\text{error} = \left(\frac{\text{Atest1} - \text{87NnP}}{\text{87NnP}}\right) \cdot 100\%$$

error = _____ %

Use the equation below to calculate the element error using Atest2 and the applied neutral current, IN:

$$\text{error} = \left(\frac{\left(\text{IN} - \text{Atest2} \cdot \frac{\text{CTR}}{\text{CTRN}}\right) - \text{87NnP}}{\text{87NnP}}\right) \cdot 100\%$$

error = _____ %

Step 5. Repeat Steps 3 and 4 for the 87N2P element.

Element Timing Accuracy Test

Note: This procedure uses the setup from the Element Pickup Accuracy Test. Perform the Element Pickup Accuracy Test before proceeding with the Element Timing Accuracy Test.

The object of the Element Timing Accuracy Test is to apply predefined signals to the relay and measure the element response time. There are two methods available to measure the element response time, SER review and output contact operation. These methods are described in ***Test Methods*** beginning on page 7-3.

87N1D Time-Delay Accuracy Test

The 87N1T Relay Word bit asserts 87N1D seconds after the measured difference exceeds the 87N1P setting. The Element Pickup Accuracy Test verified the accuracy of the 87N1P setting. This test applies signals greater than the 87N1P setting and measures the element definite operating time.

Step 1. Based on the two timing test descriptions above (SER or output contact driving an external timer), select one method and make the settings and connections necessary to support the selection. Configure the current test sources to IN and Atest2, as determined in the element accuracy test. 87N1P should be deasserted. Remove IN.

Step 2. Expect 87N1T to assert 87N1D seconds after the IN test signal is removed.

Step 3. Record the element operating time, Ttest. Remove the test currentss.

Ttest = _____ seconds

Step 4. Calculate the relay timing error using the equation:

$$\text{error} = \left(\frac{\text{Ttest} - 87\text{N1D}}{87\text{N1D}}\right) \cdot 100\%$$

error = _____ %

You may wish to test the 87N2D timer using the same procedure.

Current Differential (87) Elements

Equipment Needed

- SEL-300G Relay under test.
- Two Single-Phase AC Current Test Sources with adjustable magnitude.
- PC with terminal emulation software and appropriate serial cable to connect the PC-COM port to the relay.

Basic Element Operation

The SEL-300G has several components to its differential element. Figure 7.32 gives a representation of the differential characteristic and the plot of each test.

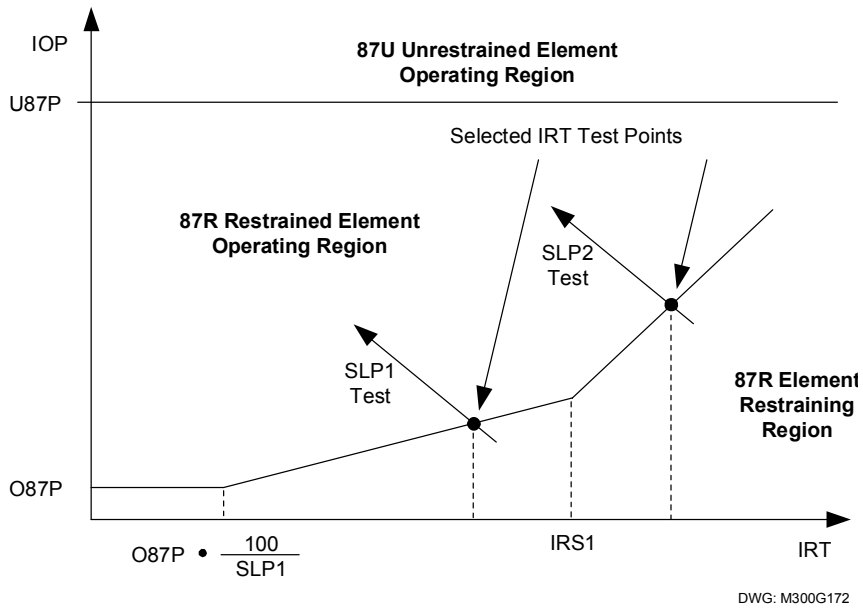

Figure 7.32: Percentage Restraint Differential Characteristic

See ***Section 13: Differential Element Settings*** for additional details on the operation of the Current Differential Elements.

U87P Unrestrained Element Operating Accuracy Test

Step 1. Connect a single current source to the IA or IA87 current input.

Step 2. Using the front-panel or serial port **SHO** command, note the settings associated with the 87U element:

E87 = G or T	(setting enables the Current Differential Elements)
TRCON = _____	(transformer connection setting, hidden when E87 = G)
CTCON = _____	(ct connection setting, hidden when E87 = G)
TAP1 = _____	A (phase current input tap quantity)
TAPD = _____	A (87-input tap quantity)
U87P = _____	multiple of TAP (unrestrained element pickup setting)

Step 3. The 87U element picks up when the differential operate current exceeds the U87P setting.

Calculate the expected element operate current using the equation:

Iop = U87P • TAP1 • A
Iop = _____ A secondary

where A is selected from Table 7.19 when test current is applied to IA, IB, or IC. Replace A with B and TAP1 with TAPD in the Iop equation above if test current is applied to IA87, IB87, or IC87.

Table 7.19: Test Current Adjustment Factors For Testing

TRCON Setting	CTCON Setting	A	B
YY	Y	$\sqrt{3}$	$\sqrt{3}$
YDAC	Y	$\sqrt{3}$	1
YDAB	Y	$\sqrt{3}$	1
DABY	Y	1	$\sqrt{3}$
DACY	Y	1	$\sqrt{3}$
E87 = G, and All Other E87 = T Connection Combinations		1	1

When performing this test manually, it is easy to determine when an instantaneous element picks up by viewing the element state directly using the front-panel TARGET function. Press the front-panel OTHER pushbutton, use the Down arrow button to underline the word TAR in the LCD display, then press SELECT. This command sequence causes the LCD display and lower deck of target LEDs to display individual Relay Word rows. Press the Down arrow button several times to display Relay Word Row 34, which contains the 87U element indications, as shown in Table 7.20.

Table 7.20: Relay Word Row 34 Shows Relay Word Bits for 87U Elements

Target LED	• 24	• 27/59	• 32	• 40	• 46	• 64G	• 81	• 87
TAR 34 Command causes these LEDs to represent:	87U	87U1	87U2	87U3	50H1	50H1T	50H2	50H2T

During the manual test, as you change the test current, you can see the Relay Word bits assert and deassert to indicate pickup and dropout of the respective elements.

If you prefer to monitor a contact closure to indicate element pickup, use the Access Level 2 **SET** command to program an output contact to close when the element under test picks up.

Step 4. Gradually increase the current magnitude. Record the test current applied to the relay when the 87U Relay Word bit asserts.

Itest = _____ amps

Use the equation below to calculate the element error:

$$\text{error} = \left(\frac{\dfrac{\text{Itest}}{\text{TAP1} \cdot \text{A}} - \text{U87P}}{\text{U87P}} \right) \cdot 100\%$$

error = _____ %

Replace TAP1 and A with TAPD and B if the test was performed with current applied to IA87, IB87, or IC87.

O87P Restrained Element Pickup Accuracy Test

Step 1. Connect a single current source to the IA or IA87 current input.

Step 2. Using the front-panel or serial port **SHO** command, note the settings associated with the 87R element:

E87 = G or T	(setting enables the Current Differential Elements)
TRCON = _____	(transformer connection setting, hidden when E87 = G)
CTCON = _____	(ct connection setting, hidden when E87 = G)
TAP1 = _____	A (phase current input tap quantity)
TAPD = _____	A (87-input tap quantity)
O87P = _____	multiple of TAP (restrained element pickup setting)

Step 3. The 87R element picks up when the differential operate current exceeds the O87P setting if the test current is low enough to not move the test into the percentage restrained characteristic of the element.

Calculate the expected element operate current using the equation:

Iop = O87P • TAP1 • A
Iop = _____ A secondary

where A is selected from Table 7.19 when test current is applied to IA, IB, or IC. Replace A with B and TAP1 with TAPD in the Iop equation above if test current is applied to IA87, IB87, or IC87.

When performing this test manually, it is easy to determine when an instantaneous element picks up by viewing the element state directly using the front-panel TARGET function. Press the front-panel OTHER pushbutton, use the Down arrow button to underline the word TAR in the LCD display, then press SELECT. This command sequence causes the LCD display and lower deck of target LEDs to display individual Relay Word rows. Press the Down arrow button several times to display Relay Word Row 33, which contains the 87R element indications, as shown in Table 7.21.

Table 7.21: Relay Word Row 33 Shows Relay Word Bits for 87R Elements

Target LED	• 24	• 27/59	• 32	• 40	• 46	• 64G	• 81	• 87
TAR 33 Command causes these LEDs to represent:	87B	87BL1	87BL2	87BL3	87R	87R1	87R2	87R3

During the manual test, as you change the test current, you can see the Relay Word bits assert and deassert to indicate pickup and dropout of the respective elements.

If you prefer to monitor a contact closure to indicate element pickup, use the Access Level 2 **SET** command to program an output contact to close when the element under test picks up.

Step 4. Gradually increase the current magnitude. Record the test current applied to the relay when the 87R Relay Word bit asserts.

Itest = _____ amps

Use the equation below to calculate the element error:

$$\text{error} = \left(\frac{\dfrac{\text{Itest}}{\text{TAP1} \cdot \text{A}} - \text{O87P}}{\text{O87P}} \right) \cdot 100\%$$

error = _____ %

Replace TAP1 and A with TAPD and B if the test was performed with current applied to IA87, IB87, or IC87.

SLP1 Restrained Element Accuracy Test

Step 1. Connect current sources to the IA and IA87 current inputs.

Step 2. Using the front-panel or serial port **SHO** command, note the settings associated with the 87R element:

E87 = G or T	(setting enables the Current Differential Elements)
TRCON = _____	(transformer connection setting, hidden when E87 = G)
CTCON = _____	(ct connection setting, hidden when E87 = G)
TAP1 = _____	A (phase current input tap quantity)
TAPD = _____	A (87-input tap quantity)
O87P = _____	multiple of TAP (restrained element pickup setting)
SLP1 = _____	% (restrained element slope 1 percentage)

SLP2 = _____ % (restrained element slope 2 percentage, hidden and fixed at 100% if E87 = G)

IRS1 = _____ multiple of TAP (restrained element slope 1 limit, hidden and fixed at 3 if E87 = G)

Step 3. Select a test point on the percentage restraint slope 1 characteristic (see Figure 7.32). This test point is represented by a restraint current, IRT, in multiples of TAP, and should be in the range:

O87P • 100/SLP1 < IRT < IRS1
IRT = _____ multiples of TAP

The value of IOP corresponding to the selected IRT equals the following:

$$IOP = \frac{SLP1}{100} \cdot IRT$$

IOP = _____ multiples of TAP

Calculate the expected current for IA and IA87 at the restrained differential element SLP1 threshold for the test point selected above using the following formula:

$$IA = IRT \cdot \left(1 + \frac{SLP1}{200}\right) \cdot TAP1 \cdot A$$

IA = _____ amps

Calculate the IA87 current expected operate value for the test using the following formula:

$$IA87f = IRT \cdot \left(1 - \frac{SLP1}{200}\right) \cdot TAPD \cdot B$$

IA87f = _____ amps

The A and B connection compensation constants are found in Table 7.19.

Calculate the initial value for the IA87 current using the equation:

IA87i = IA • TAPD/TAP1
IA87i = _____ amps

This initial value of current, when applied to the relay with IA, will result in IOP = 0.

When performing this test manually, it is easy to determine when an instantaneous element picks up by viewing the element state directly using the front-panel TARGET function. Press the front-panel OTHER pushbutton, use the Down arrow button to underline the word TAR in the LCD display, then press SELECT. This command sequence causes the LCD display and lower deck of target LEDs to display individual Relay Word rows. Press the Down arrow button several times to display Relay Word Row 33, which contains the 87R element indications, as shown in Table 7.21.

During the manual test, as you change the test current, you can see the Relay Word bits assert and deassert to indicate pickup and dropout of the respective elements.

If you prefer to monitor a contact closure to indicate element pickup, use the Access Level 2 **SET** command to program an output contact to close when the element under test picks up.

Step 4. Set the IA current test source to apply current at phase angle = 0° and with a magnitude equal to IA calculated in Step 3. Set the IA87 current test source to apply current at phase angle = 180° and magnitude equal to IA87i, calculated in Step 3. Gradually decrease the IA87 current magnitude. Record the test current applied to the relay when the 87R Relay Word bit asserts. The test current should closely equal the IA87f value calculated in Step 3.

Itest = _____ amps

SLP2 Restrained Element Accuracy Test

Step 1. Connect current sources to the IA and IA87 current inputs.

Step 2. Using the front-panel or serial port **SHO** command, note the settings associated with the 87R element:

E87 = G or T	(setting enables the Current Differential Elements)
TRCON = _____	(transformer connection setting, hidden when E87 = G)
CTCON = _____	(ct connection setting, hidden when E87 = G)
TAP1 = _____	A (phase current input tap quantity)
TAPD = _____	A (87-input tap quantity)
O87P = _____	multiple of TAP (restrained element pickup setting)
SLP1 = _____	% (restrained element slope 1 percentage)
SLP2 = _____	% (restrained element slope 2 percentage, hidden and fixed at 100% if E87 = G)
IRS1 = _____	multiple of TAP (restrained element slope 1 limit, hidden and fixed at 3 if E87 = G)

Step 3. Select a test point on the percentage restraint slope 2 characteristic (see Figure 7.32). This test point is represented by a restraint current, IRT, in multiples of TAP, and should be in the range:

IRT > IRS1
IRT = _____ multiples of TAP

The value of IOP corresponding to the selected IRT equals the following:

$$IOP = \frac{SLP2}{100} \cdot IRT + IRS1 \cdot \left(\frac{SLP1 - SLP2}{100} \right)$$

IOP = _____ multiples of TAP

Calculate the expected current for IA and IA87 at the restrained differential element SLP1 threshold for the test point selected above using the following formula:

$$IA = \left(IRT \cdot \left(1 + \frac{SLP2}{200} \right) + IRS1 \cdot \left(\frac{SLP1 - SLP2}{200} \right) \right) \cdot TAP1 \cdot A$$

IA = _____ amps

Calculate the IA87 current expected operate value for the test using the following formula:

$$IA87f = \left(IRT \cdot \left(1 - \frac{SLP2}{200} \right) - IRS1 \cdot \left(\frac{SLP1 - SLP2}{200} \right) \right) \cdot TAPD \cdot B$$

IA87f = _____ amps

The A and B connection compensation constants are found in Table 7.19.

Calculate the initial value for the IA87 current using the equation:

IA87i = 1.1 • IA87f
IA87i = _____ amps

When performing this test manually, it is easy to determine when an instantaneous element picks up by viewing the element state directly using the front-panel TARGET function. Press the front-panel OTHER pushbutton, use the Down arrow button to underline the word TAR in the LCD display, then press SELECT. This command sequence causes the LCD display and lower deck of target LEDs to display individual Relay Word rows. Press the Down arrow button several times to display Relay Word Row 33, which contains the 87R element indications, as shown in Table 7.21.

During the manual test, as you change the test current, you can see the Relay Word bits assert and deassert to indicate pickup and dropout of the respective elements.

If you prefer to monitor a contact closure to indicate element pickup, use the Access Level 2 **SET** command to program an output contact to close when the element under test picks up.

Step 4. Set the IA current test source to apply current at phase angle = 0° and with a magnitude equal to IA calculated in Step 3. Set the IA87 current test source to apply current at phase angle = 180° and magnitude equal to IA87i, calculated in Step 3. Gradually decrease the IA87 current magnitude. Record the test current applied to the relay when the 87R Relay Word bit asserts. The test current should closely equal the IA87f value calculated in Step 3.

Itest = _____ amps

PCT2 Second-Harmonic Blocking Accuracy Test

Note: This test requires a current source capable of generating second-harmonic currents. This test verifies operation of the second-harmonic blocking function which is disabled when E87 = G or when E87 = T and PCT2 = OFF.

Step 1. Connect current sources to the IA current inputs, as shown in Figure 7.33.

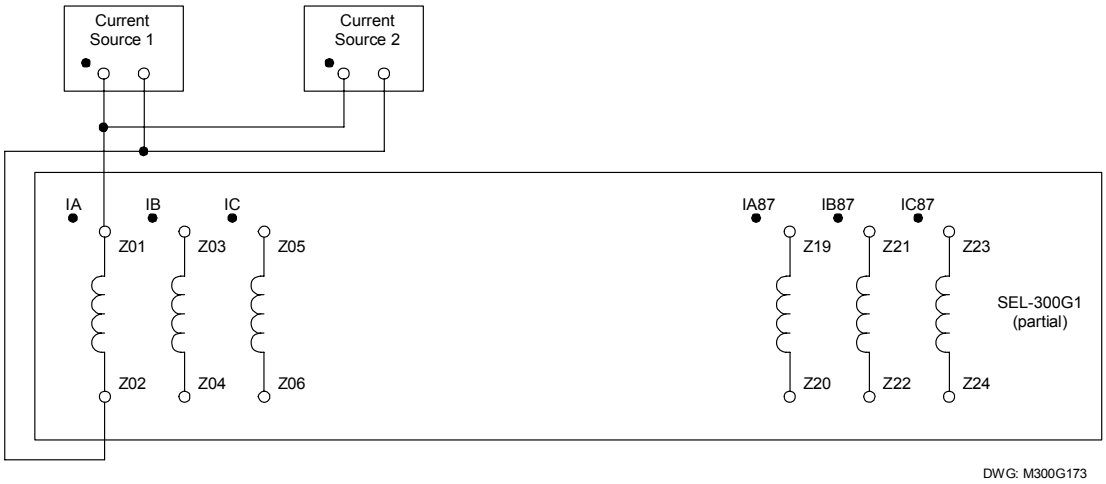

Figure 7.33: Test Connections for Parallel Current Sources

Step 2. Using the front-panel or serial port **SHO** command, note the settings associated with the 87R element:

E87 = T	(setting enables the Current Differential Elements)
PCT2 = _____	% (second-harmonic blocking percentage, hidden and fixed at OFF if E87 = G)

Set Current Source 1 to apply fundamental frequency current. Press the front-panel OTHER pushbutton, use the Down arrow button to underline the word TAR in the LCD display, then press SELECT. This command sequence causes the LCD display and lower deck of target LEDs to display individual Relay Word rows. Press the Down arrow button several times to display Relay Word Row 33, which contains the 87R element indications, as shown in Table 7.21.

Increase the magnitude of applied current until 87R asserts. Note this value of current.

IA1 = _____ amps

Step 3. Calculate the value of second-harmonic current necessary to block the restrained element using the equation below:

IA2 = (PCT2/100) • IA1 amps
IA2 = _____ amps

Step 4. Set the Current Source 2 to apply second-harmonic current. Gradually increase the Current Source 2 magnitude. Record the test current applied to the relay when the 87R Relay Word bit deasserts. The test current should closely equal the IA2 value calculated in Step 3.

Itest = _____ amps

DIFFERENTIAL ELEMENT COMMISSIONING WORKSHEET

Date: _____ Installer: _____

RELAY ID (RID): _____ TERMINAL ID (TID): _____

CTR = _____ CTRD = _____ E87 = _____

TRCON = _____ CTCON = _____

With load applied to the relay, use the front panel **METER** Inst function to find the current quantities (magnitude and phase angle) and the three-phase power quantities:

IA = _____ IA87 = _____

IB = _____ IB87 = _____

IC = _____ IC87 = _____

Next, use the **METER DIF** function to find the differential operate, in percent of restraint:

IOP1 = _____ % of restraint

IOP2 = _____ % of restraint

IOP3 = _____ % of restraint

If all three operate quantities are less than 10 percent of restraint, then the relay is installed correctly.

If IOP1, IOP2 or IOP3 is greater than 10 percent, there may be a connection, CT ratio, or setting error. Perform the following additional checks:

1. Plot the six measured currents in the chart on the following Check List. Verify correct phase rotation for both sets of three currents. Correct any problems found and recheck the operate quantities to determine if they are less than 10 percent.

2. Based on the relay settings and the chart notations, verify the desired phase angle difference between the phase current inputs and the differential current inputs. Correct any problems found and recheck the operate quantities to determine if they are less than 10 percent.

3. Steps 1 and 2 address possible CT connection errors. If IOP > 10 percent remains on a single phase, check the CT tap connections of the affected phase to verify that the relay is connected to the appropriate CT tap, per the CTR and CTRD settings. If mismatch remains on all three phases, check the CTR and CTRD settings to ensure that they are correct, per the actual CT ratio.

Check List

1. Phasor rotation is as expected.
2. Circle your transformer and CT connection:

If E87 = G, OR
If E87 = T AND

TRCON = GEN, CTCON = Y
TRCON = DABY, CTCON = DAB
TRCON = YDAB, CTCON = Y
TRCON = DACY, CTCON = DAC
TRCON = YDAC, CTCON = Y
TRCON = DABDAB, CTCON = Y
TRCON = DACDAC, CTCON = Y
TRCON = YY, CTCON = Y

Then, phase angles should be 180° apart.

If E87 = T AND

TRCON = GEN, CTCON = DAC
TRCON = DABY, CTCON = Y
TRCON = YDAC, CTCON = Y

Then, I87 should lead IW1 by 150°.

If E87 = T AND

TRCON = GEN, CTCON = DAB
TRCON = DACY, CTCON = Y
TRCON = YDAB, CTCON = Y

Then, I87 should lag IW1 by 150°.

Plot Phasors

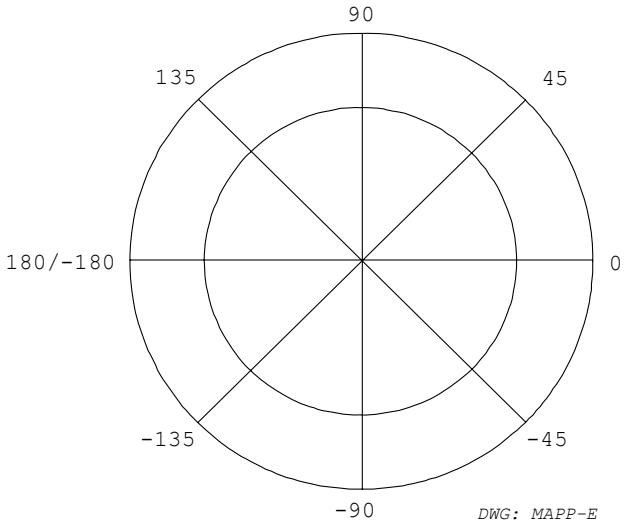

TABLE OF CONTENTS

SECTION 8: MONITORING AND METERING FUNCTIONS 8-1

Introduction 8-1
Generator Operating Statistics 8-1
Generator Hour Meters 8-1
Generator Accumulated I_2^2t 8-2
Generator Average Output Power 8-2
Off-Frequency Operating Time Accumulators 8-2
Example PROFILE Command Response 8-2
Resetting the Averages and Accumulators 8-2
Breaker Monitor 8-3
Breaker Monitor Operation Example 8-3
Breaker Monitor Output 8-4
View or Reset Breaker Monitor Information 8-4
Determination of Relay Initiated Trips and Externally Initiated Trips 8-5
Station DC Battery Monitor 8-10
View Station DC Battery Voltage 8-10
Analyze Station DC Battery Voltage 8-10
Operation of Station DC Battery Monitor When AC Voltage is Powering the Relay 8-11
Differential Metering 8-11
View Differential Metering Information 8-11
Energy Metering 8-11
View or Reset Energy Metering Information 8-11
Energy Metering Updating and Storage 8-12
Maximum/Minimum Metering 8-12
View or Reset Maximum/Minimum Metering Information 8-12
Maximum/Minimum Metering Updating and Storage 8-13

FIGURES

Figure 8.1: Breaker Monitor Accumulates 10% Wear 8-6
Figure 8.2: Breaker Monitor Accumulates 25% Wear 8-7
Figure 8.3: Breaker Monitor Accumulates 50% Wear 8-8
Figure 8.4: Breaker Monitor Accumulates 100% Wear 8-9

SECTION 8: MONITORING AND METERING FUNCTIONS

INTRODUCTION

The SEL-300G Relay monitoring functions include:

- Generator Operating Statistics
- Breaker Monitor
- Station DC Battery Monitor

In addition to instantaneous and demand metering, the SEL-300G metering functions include:

- Differential Metering
- Energy Metering
- Maximum/Minimum Metering

This section explains these functions in detail.

GENERATOR OPERATING STATISTICS

The SEL-300G helps track the performance and utilization of the protected generator by tracking several generator operating statistics such as:

- Total Generator Running Hours
- Total Generator Stopped Hours
- Generator Full Load Hours
- Percent of time running
- Accumulated generator I_2^2t
- Average real and reactive power outputs
- Average power factor

In addition, the relay records the time-of-operation in each 0.1 Hz frequency band between 40 and 70 Hz. This data is updated each second, then stored in nonvolatile memory on a daily basis at 23:50 hours. All the data listed above, plus the present 81AC Off-Frequency Time Accumulator values can be viewed or reset using the serial port **PROFILE** command.

Generator Hour Meters

The relay provides three hour meters plus a Time Running percentage to help record generator utilization. The relay considers the generator stopped any time the three-pole open (3PO) Relay Word bit is asserted (logical 1). As shown in ***Section 2: Relay Element Settings***, 3PO asserts when all three phase current magnitudes are below the 50L setting and the 52A Relay Word bit is deasserted (logical 0). The relay considers the generator running any time the 3PO Relay Word bit is deasserted.

The Full Load Hours hour meter is similar to the Running Hours hour meter, except that the time advances more slowly when the generator is operated at less than full load. For instance, one hour of generator operation at phase current equal to 0.5 times INOM would result in 60 minutes added to the Running Hours meter but only 30 minutes added to the Full Load Hours meter.

The relay calculates the Time Running percentage by dividing the Running Hours by the sum of Running and Stopped hours, then multiplying by 100 percent.

Generator Accumulated I_2^2t

Because the detrimental mechanical effects of unbalance current on the generator are cumulative, the SEL-300G Relay records the accumulated I_2^2t experienced by the generator over time. The relay advances this time whenever the negative-sequence time-overcurrent element is picked up, as indicated by Relay Word bit 46Q2. This time is incremented regardless of whether the relay trips in response to the unbalance condition. This value carries units of secondary amperes squared-seconds.

Generator Average Output Power

While the generator is running, as defined above, the relay averages the three-phase real power output in megawatts. It also records the average input and output reactive three-phase power in megavars. Positive VARs are defined as generator output reactive power; negative VARs are defined as input reactive power.

From the real and reactive averages, the relay calculates the average power factor. Leading average power factor is defined when average MVAR in is greater than the average MVAR out. Lagging average power factor is defined when the average MVAR in is less than the average MVAR out.

Off-Frequency Operating Time Accumulators

The relay tracks operating time by frequency in two manners, both represented in the generator operating statistics record. The first report is associated with the 81AC Off-Frequency Time Accumulator Protection function. When this function is enabled, the relay **PROFILE** command response reports the present accumulated time in each of the defined protection bands. The accumulated time is reported in seconds and percentage of the limit setting. The relay 81AC Off-Frequency Time Accumulator function accumulates up to 6553 seconds and can report percentages as high as 9999 percent. If the accumulated time percentage of the limit time exceeds 9999 percent, the relay reports $$$$$ percent in that band.

The final section of the PROFILE command response reports the accumulated operating time overfrequency in 0.1 Hz bands from 40 Hz to 70 Hz. This report is independent of the 81AC protection function.

Example PROFILE Command Response

Section 10: Serial Port Communications and Commands includes an example response to the **PROFILE** command.

Resetting the Averages and Accumulators

From serial port Access Level 2, you can reset the PROFILE averages and accumulators. You may find it useful to reset the Operating History and Average Power quantities following generator or prime mover turn-arounds or overhauls. The Off-Frequency and Operating Frequency accumulators should be reset only following major generator overhauls.

BREAKER MONITOR

Section 3: Auxiliary Function Settings describes the Breaker Monitor settings.

The operation of the breaker monitor maintenance curve, when new current values are read in, is explained in the following example.

Breaker Monitor Operation Example

As stated earlier, each phase (A, B, and C) has its own breaker maintenance curve. For this example, presume that the interrupted current values occur on a single phase in Figure 8.1 through Figure 8.4. Also, presume that the circuit breaker interrupting contacts have no wear at first (brand new or recent maintenance performed).

Note in the following four figures (Figure 8.1 through Figure 8.4) that the interrupted current in a given figure is the same magnitude for all the interruptions (e.g., in Figure 8.2, 2.5 kA is interrupted 290 times). This is not realistic, but helps in demonstrating the operation of the breaker maintenance curve and how it integrates for varying current levels.

0 Percent to 10 Percent Breaker Wear

Refer to Figure 8.1. 7.0 kA is interrupted 20 times (20 close/open operations = 20 – 0), pushing the breaker maintenance curve from the 0 percent wear level to the 10 percent wear level.

Compare the 100 percent and 10 percent curves and note that for a given current value, the 10 percent curve has only 1/10 of the close/open operations of the 100 percent curve.

10 Percent to 25 Percent Breaker Wear

Refer to Figure 8.2. The current value changes from 7.0 kA to 2.5 kA. 2.5 kA is interrupted 290 times (290 close/open operations = 480 – 190), pushing the breaker maintenance curve from the 10 percent wear level to the 25 percent wear level.

Compare the 100 percent and 25 percent curves and note that for a given current value, the 25 percent curve has only 1/4 of the close/open operations of the 100 percent curve.

25 Percent to 50 Percent Breaker Wear

Refer to Figure 8.3. The current value changes from 2.5 kA to 12.0 kA. 12.0 kA is interrupted 11 times (11 close/open operations = 24 – 13), pushing the breaker maintenance curve from the 25 percent wear level to the 50 percent wear level.

Compare the 100 percent and 50 percent curves and note that for a given current value, the 50 percent curve has only 1/2 of the close/open operations of the 100 percent curve.

50 Percent to 100 Percent Breaker Wear

Refer to Figure 8.4. The current value changes from 12.0 kA to 1.5 kA. 1.5 kA is interrupted 3000 times (3000 close/open operations = 6000 – 3000), pushing the breaker maintenance curve from the 50 percent wear level to the 100 percent wear level.

When the breaker maintenance curve reaches 100 percent for a particular phase, the percentage wear remains at 100 percent (even if additional current is interrupted), until reset by the **BRE R**

command (see ***View or Reset Breaker Monitor Information*** that follows later). The current and trip counts continue to be accumulated, until reset by the **BRE R** command.

Additionally, logic outputs assert for alarm or other control applications—see the following discussion.

Breaker Monitor Output

When the breaker maintenance curve for a particular phase (A, B, or C) reaches the 100 percent wear level (see Figure 8.4), a corresponding Relay Word bit (BCWA, BCWB, or BCWC) asserts.

Relay Word bit	Definition
BCWA	A-phase breaker contact wear has reached the 100 percent wear level
BCWB	B-phase breaker contact wear has reached the 100 percent wear level
BCWC	C-phase breaker contact wear has reached the 100 percent wear level
BCW	BCWA + BCWB + BCWC

Example Applications

These logic outputs can be used to alarm:

OUT107 = …+ BCW +…

View or Reset Breaker Monitor Information

Accumulated breaker wear/operations data is retained if the relay loses power. The accumulated data can be reset only if the **BRE R** command is executed (see the following discussion on the **BRE R** command).

Via Serial Port

See ***BRE Command (Breaker Monitor Data)*** in ***Section 10: Serial Port Communications and Commands***. The **BRE** command displays the following information:

- Accumulated number of relay initiated trips
- Accumulated interrupted current from relay initiated trips
- Accumulated number of externally initiated trips
- Accumulated interrupted current from externally initiated trips
- Percent circuit breaker contact wear for each phase
- Date when the preceding items were last reset (via the **BRE R** command)

See ***BRE n Command (Preload/Reset Breaker Wear)*** in ***Section 10: Serial Port Communications and Commands***. The **BRE W** command allows the percent breaker wear to be preloaded for each individual phase.

The **BRE R** command resets the accumulated values and the percent wear for all three phases. For example, if breaker contact wear has reached the 100 percent wear level for A-phase, the corresponding Relay Word bit BCWA asserts (BCWA = logical 1). Execution of the **BRE R** command resets the wear levels for all three phases back to 0 percent and consequently causes Relay Word bit BCWA to deassert (BCWA = logical 0).

Via Front Panel

The information and reset functions available via the previously discussed serial port commands **BRE** and **BRE R** are also available via the front-panel OTHER pushbutton. See Figure 9.3 in ***Section 9: Front-Panel Operation***.

Determination of Relay Initiated Trips and Externally Initiated Trips

See ***BRE Command (Breaker Monitor Data)*** in ***Section 10: Serial Port Communications and Commands***. Note in the BRE command response that the accumulated number of trips and accumulated interrupted current are separated into two groups of data: that generated by **relay initiated trips** (Int Trips) and that generated by **externally initiated trips** (Ext Trips). The categorization of this data is determined by the status of the TRIP Relay Word bit when the SELOGIC® control equation breaker monitor initiation setting BKMON operates.

Refer to Figure 3.11 and accompanying explanation in ***Section 3: Auxiliary Function Settings***. If BKMON newly asserts (logical 0 to logical 1 transition), the relay reads in the current values (Phases A, B, and C). Now the decision has to be made: where is this current and trip count information accumulated? Is it under **relay initiated trips** or **externally initiated trips**?

To make this determination, the status of the TRIP Relay Word bit is checked at the instant BKMON newly asserts (TRIP is the logic output of Figure 4.6). If TRIP is asserted (TRIP = logical 1), the current and trip count information is accumulated under **relay initiated trips** (Int Trips). If TRIP is deasserted (TRIP = logical 0), the current and trip count information is accumulated under **externally initiated trips** (Ext Trips).

Regardless of whether the current and trip count information is accumulated under relay initiated trips or externally initiated trips, this same information is routed to the breaker maintenance curve for continued breaker wear integration (see Figure 8.1 through Figure 8.4).

Factory Default Setting Example

As discussed previously, the SELOGIC control equation breaker monitor initiation factory default setting is:

BKMON = TRIP1

Thus, any new assertion of BKMON will be deemed a relay trip, and the current and trip count information is accumulated under **relay initiated trips** (Int Trips).

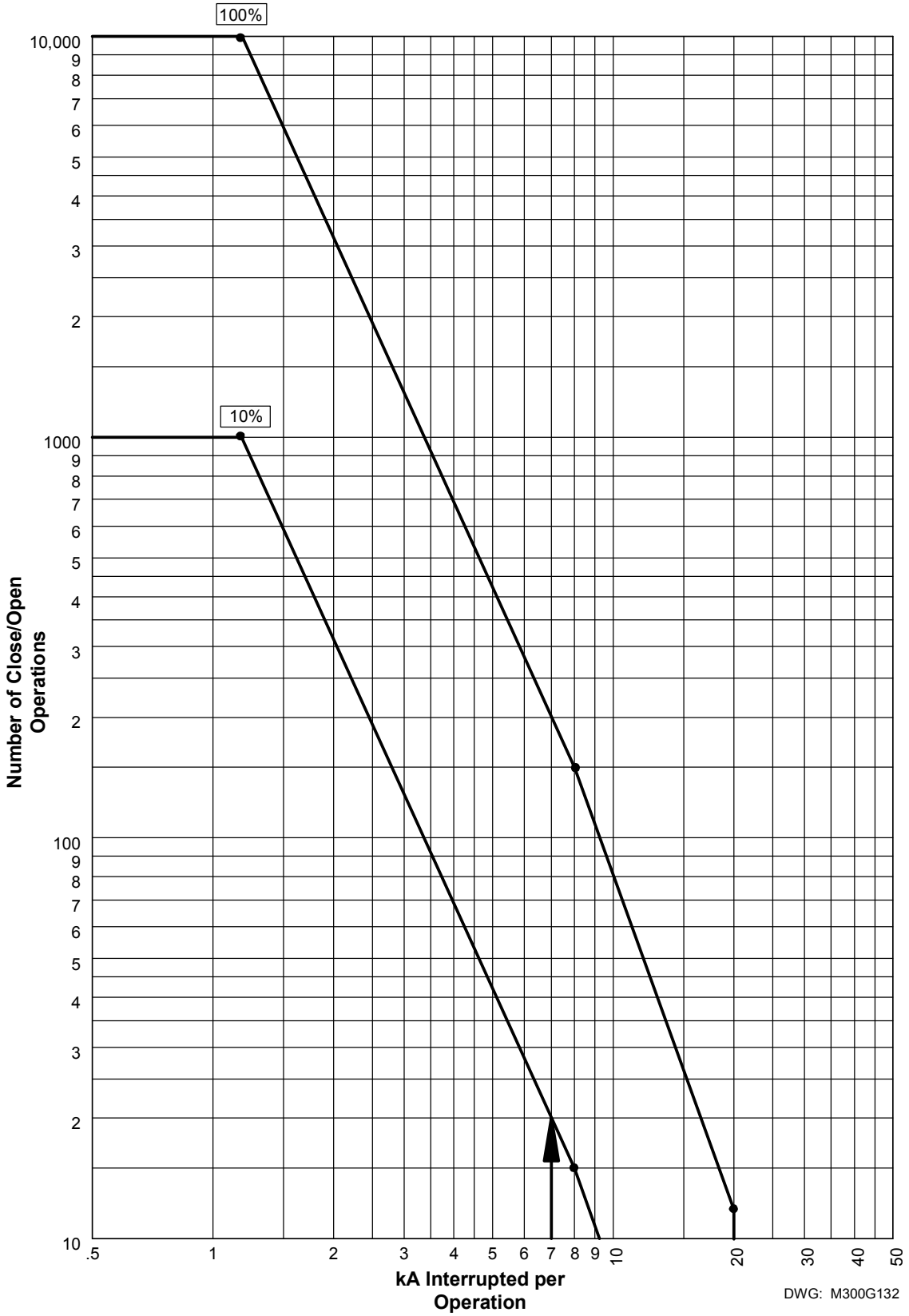

Figure 8.1: Breaker Monitor Accumulates 10% Wear

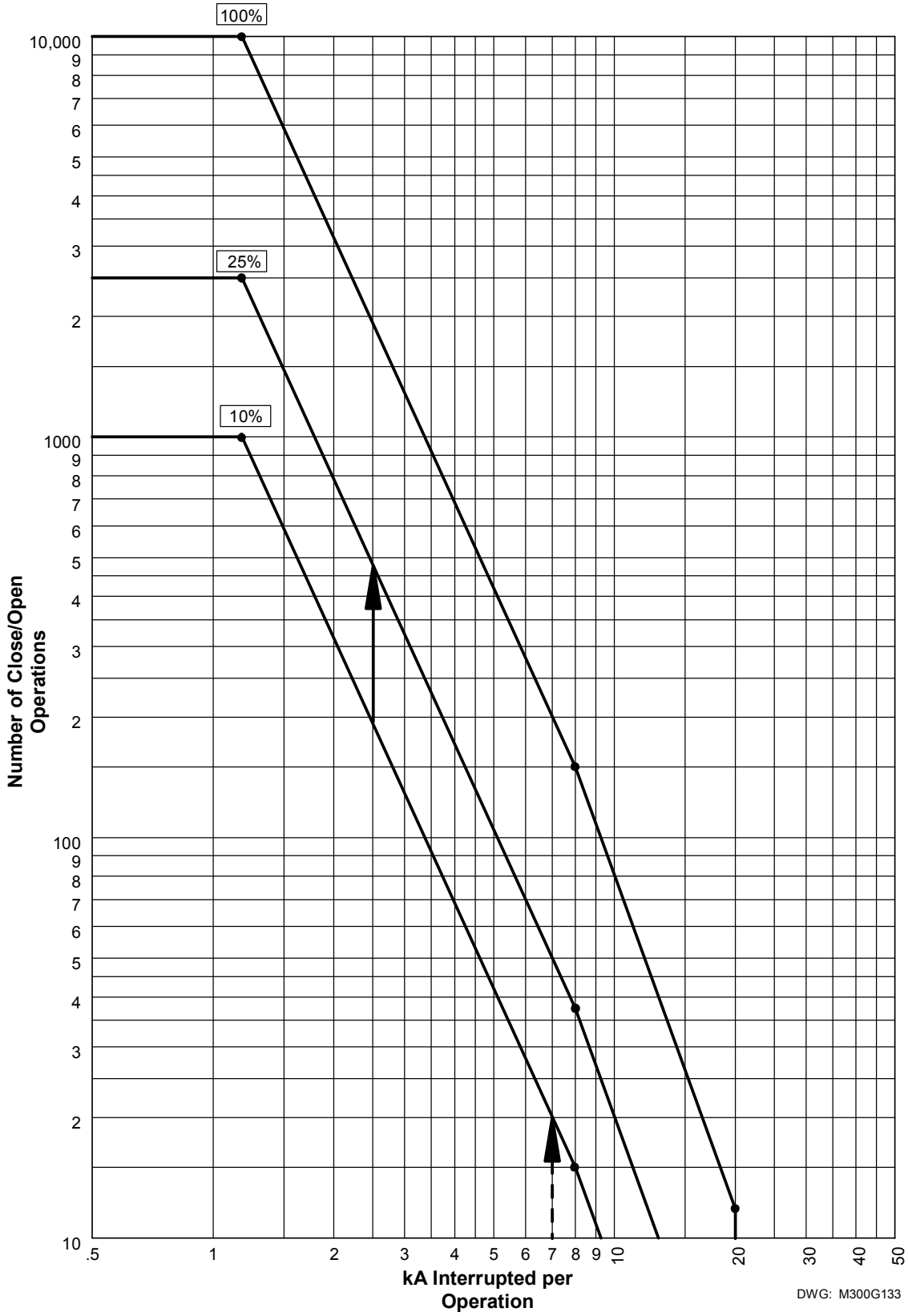

Figure 8.2: Breaker Monitor Accumulates 25% Wear

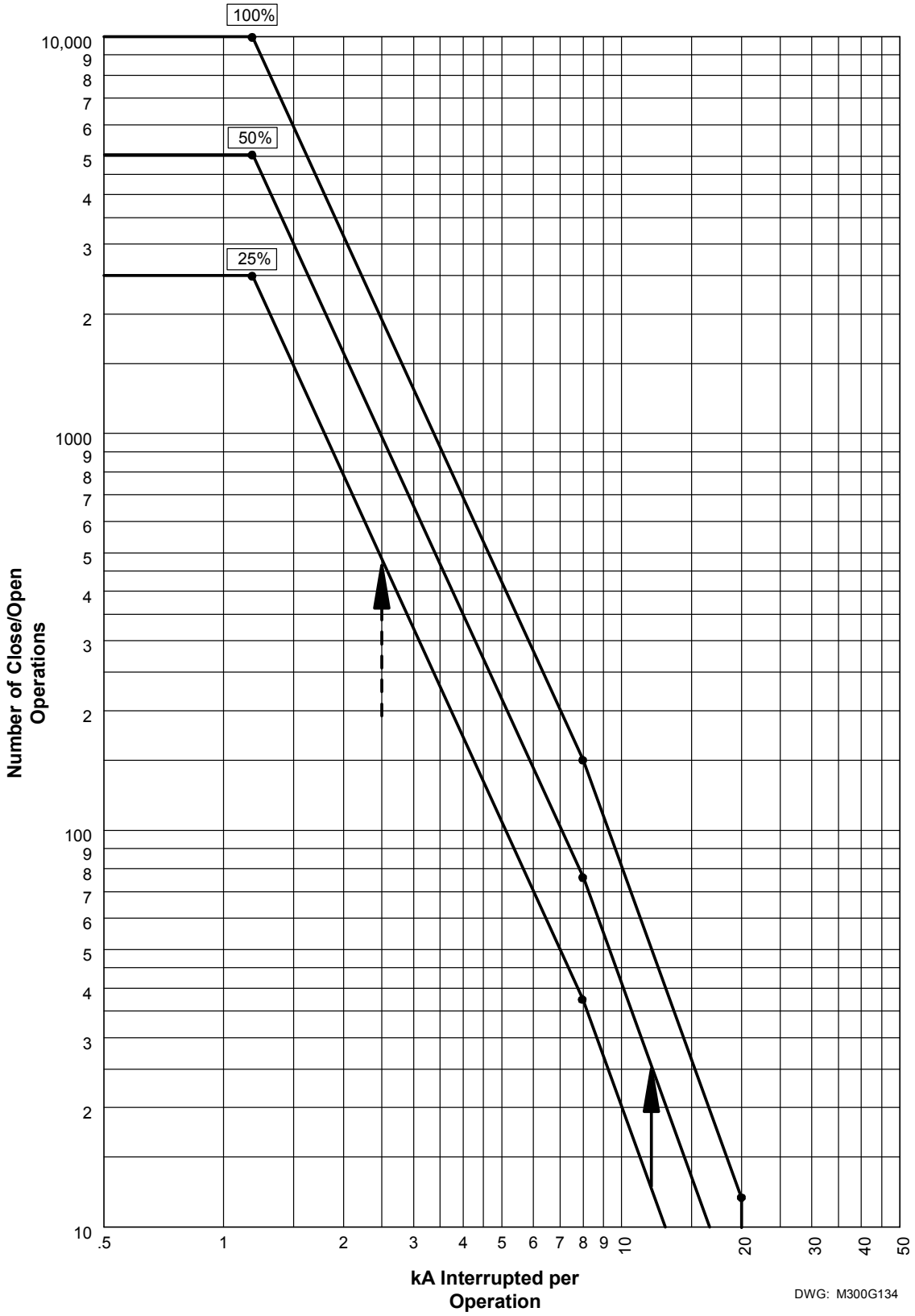

Figure 8.3: Breaker Monitor Accumulates 50% Wear

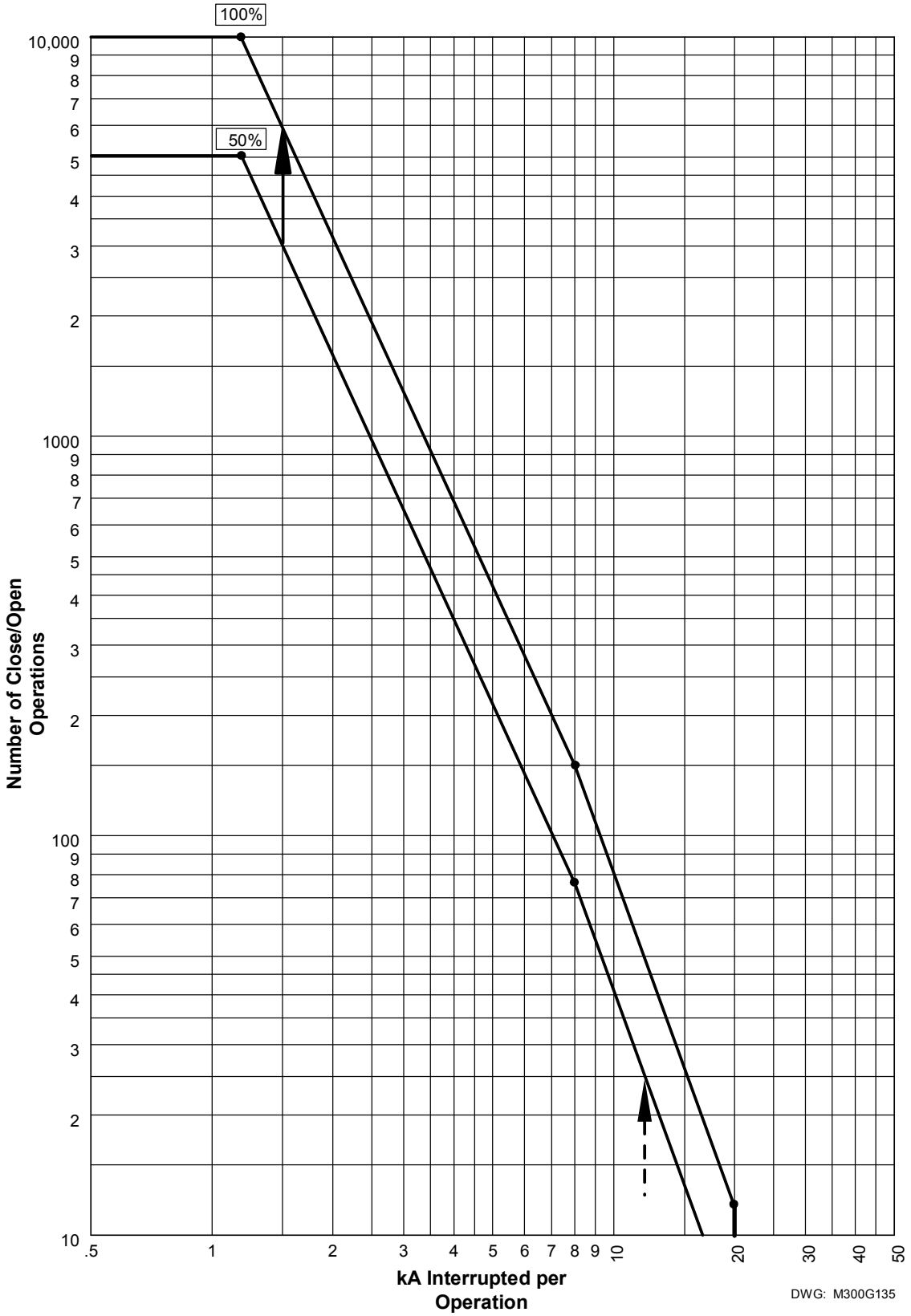

Figure 8.4: Breaker Monitor Accumulates 100% Wear

STATION DC BATTERY MONITOR

The station dc battery monitor in the SEL-300G can alarm for under- or overvoltage dc battery conditions and give a view of how much the station dc battery voltage dips when tripping, closing, and other dc control functions take place. The monitor measures the station dc battery voltage applied to the rear-panel terminals labeled POWER, Z25, and Z26. Applications of the DCHIP and DCLOP settings and DCHI and DCLO Relay Word bits are discussed in detail in ***Section 3: Auxiliary Function Settings***.

View Station DC Battery Voltage

Via Serial Port

See ***MET Command (Metering Data)***—Instantaneous Metering in ***Section 10: Serial Port Communications and Commands***. The **MET** command displays the station dc battery voltage (labeled VDC).

Via Front Panel

The information available via the previously discussed **MET** serial port command is also available via the front-panel MET pushbutton. See Figure 9.2 in ***Section 9: Front-Panel Operation***.

Analyze Station DC Battery Voltage

See ***Standard Event Reports*** in ***Section 11: Event Reports and SER Functions***. The station dc battery voltage is displayed in column Vdc in the example event report in Figure 11.2. Changes in station dc battery voltage for an event (e.g., circuit breaker tripping) can be observed. Use the **EVE** command to retrieve event reports as discussed in ***Section 12: Maintain and Troubleshoot Relay***.

Station DC Battery Voltage Dips During Circuit Breaker Tripping

Event reports are generated automatically when the TRIP1 through TRIP4 Relay Word bits assert. For example, output contact OUT101 is set to trip:

OUT101 = TRIP1

Anytime output contact OUT101 closes and energizes the circuit breaker trip coil, any dip in station dc battery voltage can be observed in column Vdc in the event report.

Station DC Battery Voltage Dips During Circuit Breaker Closing

To generate an event report when the SEL-300G closes the circuit breaker, make the SELOGIC control equation event report generation setting:

ER = /OUT105 + ...

In this example, output contact OUT105 is set to close:

OUT105 = CLOSE(CLOSE is the logic output of Figure 4.8)

Anytime output contact OUT105 closes and energizes the circuit breaker close coil, any dip in station dc battery voltage can be observed in column Vdc in the event report.

This event report generation setting (ER = /OUT105 + ...) might be made just as a **testing** setting. Generate several event reports when doing circuit breaker close testing and observe the "signature" of the station dc battery voltage in column Vdc in the event reports.

Operation of Station DC Battery Monitor When AC Voltage is Powering the Relay

If the SEL-300G has a 125/250 Vac/Vdc supply, it can be powered by ac voltage (85 to 264 Vac) connected to the rear-panel terminals labeled POWER. When powering the relay with ac voltage, the dc voltage elements in Figure 3.4 see the **average** of the sampled ac voltage powering the relay—which is very near zero volts (as displayed in column Vdc in event reports). Thus, pickup settings DCLOP and DCHIP should be set off (DCLOP = OFF, DCHIP = OFF)—they are of no real use.

If a "raw" event report is displayed (with the **EVE R** command), column Vdc will display the sampled ac voltage waveform rather than the average.

DIFFERENTIAL METERING

View Differential Metering Information

Via Serial Port

See ***MET Command (Metering Data), MET DIF—Differential Metering (Model 0300G1 and Model 0300G3)*** in ***Section 10: Serial Port Communications and Commands***. The **MET DIF** command displays the following values:

Operate Currents	Winding 1, Winding 2, and Winding 3 in multiples of TAP and percent (serial port) or per unit (front-panel IMM) of their respective restraint quantities.
Restraint Currents	Winding 1, Winding 2, and Winding 3 in multiples of TAP.
Second-Harmonic Currents	Winding 1, Winding 2, and Winding 3 in multiples of TAP and percent of their respective operate quantities.

Via Front Panel

The meter function is also available via the front-panel METER pushbutton. See Figure 9.2 in ***Section 9: Front-Panel Operation***.

ENERGY METERING

View or Reset Energy Metering Information

Via Serial Port

See ***MET Command (Metering Data)***, ***MET E—Energy Metering*** in ***Section 10: Serial Port Communications and Commands***. The **MET E** command displays accumulated single- and three-phase megawatt and megavar hours. The **MET RE** command resets the accumulated single- and three-phase megawatt and megavar hours.

Note: When open-delta PTs are applied, (DELTA_Y = D), the relay displays three-phase energy quantities only.

Via Front Panel

The information and reset functions available via the previously discussed serial port commands **MET E** and **MET RE** are also available via the front-panel METER pushbutton. See Figure 9.2 in ***Section 9: Front-Panel Operation***.

Energy Metering Updating and Storage

The SEL-300G updates energy values approximately every two seconds.

The relay stores energy values to nonvolatile storage once per day (it overwrites the previous stored value). Should the relay lose control power, it will restore the energy values saved by the relay at 23:50 hours on the previous day.

Accumulated energy metering values in the relay function like those in an electromechanical energy meter. When the energy meter reaches 999999 MWh or 999999 MVARh, it starts over at zero.

Note: If you are using Modbus® RTU Communications Protocol to retrieve energy metering data from the SEL-300G, you are limited to a maximum of 65535 MWh or 65535 MVARh. The energy meter values do not reset automatically, but they can be reset, either locally (front panel or serial port) or from a Modbus master location when they reach the maximum value mentioned above.

MAXIMUM/MINIMUM METERING

View or Reset Maximum/Minimum Metering Information

Via Serial Port

See ***MET Command (Metering Data), MET M—Maximum/Minimum Metering*** in ***Section 10: Serial Port Communications and Commands***. The **MET M** command displays maximum/minimum metering for the following values:

Currents	$I_{A,B,C,N}$	Input currents (A primary)
	I_G	Residual ground current (A primary; IG = 3I0 = IA + IB + IC)
	$I_{A87,B87,C87}$	87-Input currents (A primary, Models 0300G1, and 0300G3)
Voltages	$V_{A,B,C,N}$	Input voltages (kV primary, DELTA_Y = Y)
	$V_{AB,BC,CA,N}$	Input voltages (kV primary, DELTA_Y = D)
	V_s	Input voltage (kV primary, Models 0300G2 and 0300G3)
	V_{P3}, V_{N3}	Terminal (DELTA_Y = Y) and neutral third-harmonic voltages (V secondary)
	V_{N1}	Neutral fundamental voltage (V secondary)

Power	MW_{3P}	Three-phase megawatts
	$MVAR_{3P}$	Three-phase megavars

The **MET RM** command resets the maximum/minimum metering values.

Via Front Panel

The information and reset functions available via the previously discussed serial port commands **MET M** and **MET RM** are also available via the front-panel METER pushbutton. See Figure 9.2 in ***Section 9: Front-Panel Operation***.

Maximum/Minimum Metering Updating and Storage

The SEL-300G Relay updates maximum/minimum values, if the following conditions are met:

- A generator fault is not detected.
- The metering value is above the previous maximum or below the previous minimum for 2 cycles.
- For phase voltage values, the voltage is above 13 V secondary.
- For neutral voltage values, the voltage is above 0.05 V secondary.
- For third-harmonic voltage values, the voltage is above 0.05 V secondary.
- For current values, the currents are above:
  - 0.05 A secondary {5 A nominal}
  - A secondary {1 A nominal}
- Megawatt and megavar values are subject to the above voltage and current thresholds.

The SEL-300G stores maximum/minimum values to nonvolatile storage once per day (it overwrites the previous stored value if it is exceeded). Should the relay lose control power, it will restore the maximum/minimum values saved by the relay at 23:50 hours on the previous day.

Max/min recording is suspended and the FAULT Relay Word bit asserted if any of the following protection elements pick up: 21P1P, 21P2P, 21C1P, 21C2P, 51N, 50N1, 50N2, 50P1, 50P2, 51G, 50G1, 50G2, 50H1, 50H2, 50Q1, 50Q2, 50R1, 50R2, 51C, 51V, 46Q1, 46Q2, 64G1, 64G2, INAD, 60LOP, 87R, 87U, 87N1P, or 87N2P.

TABLE OF CONTENTS

SECTION 9: FRONT-PANEL OPERATIONS 9-1

Introduction 9-1
Front-Panel Target LEDs 9-1
Target Reset/Lamp Test Front-Panel Pushbutton 9-2
Front-Panel Pushbutton Operation 9-2
Overview 9-2
Primary Functions 9-3
Secondary Functions 9-4
Front-Panel Local Control 9-6
Local Control Function Description 9-6
View Local Control (with factory settings) 9-7
Operate Local Control (with factory settings) 9-7
Local Control State Retained When Relay De-energized 9-9
Rotating Default Display 9-9

TABLES

Table 9.1: SEL-300G Relay Front-Panel Target LED Definitions 9-1

FIGURES

Figure 9.1: SEL-300G Relay Front-Panel Pushbuttons—Overview 9-2
Figure 9.2: SEL-300G Relay Front-Panel Pushbuttons—Primary Functions 9-3
Figure 9.3: SEL-300G Relay Front-Panel Pushbuttons—Primary Functions (continued) 9-4
Figure 9.4: SEL-300G Relay Front-Panel Pushbuttons—Secondary Functions 9-5
Figure 9.5: Local Control Switch Configured as an ON/OFF Switch 9-6
Figure 9.6: Local Control Switch Configured as an OFF/MOMENTARY Switch 9-6
Figure 9.7: Local Control Switch Configured as an ON/OFF/MOMENTARY Switch 9-6

SECTION 9: FRONT-PANEL OPERATIONS

INTRODUCTION

This section describes how to get information, make settings, and execute control operations from the relay front panel. It also describes the default displays.

FRONT-PANEL TARGET LEDS

Table 9.1: SEL-300G Relay Front-Panel Target LED Definitions

LED Number	LED Label	Definition
1	EN	Relay Enabled—see subsection ***Relay Self-Test Alarms*** in ***Section 4: SELOGIC Control Equations***.
2	BKR CLOSED	Indication that the 52A SELOGIC control equation result is a logical 1; the generator main breaker is closed.
3	LOP 60	A blown relaying potential fuse condition is detected.
4	TRIP	TR1, TR2, TR3, or TR4 has asserted.
5	21/51V	A distance element, voltage controlled (51CT) time-overcurrent, or voltage restrained (51VT) time-overcurrent element trip was picked up when the last trip occurred.
6	50	A definite-time overcurrent element was timed out when the last trip occurred.
7	51	A time-overcurrent element was timed out when the last trip occurred.
8	N	A neutral overcurrent element was timed out when the last trip occurred. (occurs with 50 or 51)
9	24	A volts/hertz element was timed out when the last trip occurred.
10	27/59	An under- or overvoltage element was picked up when the last trip occurred.
11	32	A reverse/low-forward power element was timed out when the last trip occurred.
12	40	A loss-of-field element was timed out when the last trip occurred.
13	46	A negative-sequence overcurrent element was timed out when the last trip occurred.
14	64G	A 100 percent stator ground element was timed out when the last trip occurred.
15	81	An over/underfrequency element was timed out when the last trip occurred.
16	87	A current differential or ground differential element was picked up when the last trip occurred.

Target LEDs numbered 4 through 16 in Table 9.1 are updated and then latched for every new assertion (rising edge) of the TRIP1, TRIP2, TRIP3, and TRIP4 Relay Word bits. The Relay Word bits are outputs of the trip logic (see Table 4.6).

Target Reset/Lamp Test Front-Panel Pushbutton

When the Target Reset/Lamp Test front-panel pushbutton is pressed:

- All front-panel LEDs illuminate for one (1) second.
- All latched target LEDs (target LEDs numbered 4 through 16 in Table 9.1) are extinguished (unlatched) if the trip condition has vanished.
- Relay Word bit TRGTR asserts for one processing interval.

FRONT-PANEL PUSHBUTTON OPERATION

Overview

Note in Figure 9.1 that most of the pushbuttons have dual functions (primary/secondary).

A primary function is selected first (e.g., METER pushbutton).

After a primary function is selected, the pushbuttons revert to operating on their secondary functions (CANCEL, SELECT, left/right arrows, up/down arrows, EXIT). For example, after the METER pushbutton is pressed, the up/down arrows are used to scroll through the front-panel metering screens. The primary functions are activated again when the present selected function (metering) is exited (press EXIT pushbutton) or the display goes back to the default display after no front-panel activity for a settable time period (see global setting FP_TO in ***Settings Sheets*** at the end of ***Section 6: Enter Relay Settings***; relay shipped with FP_TO = 15 minutes).

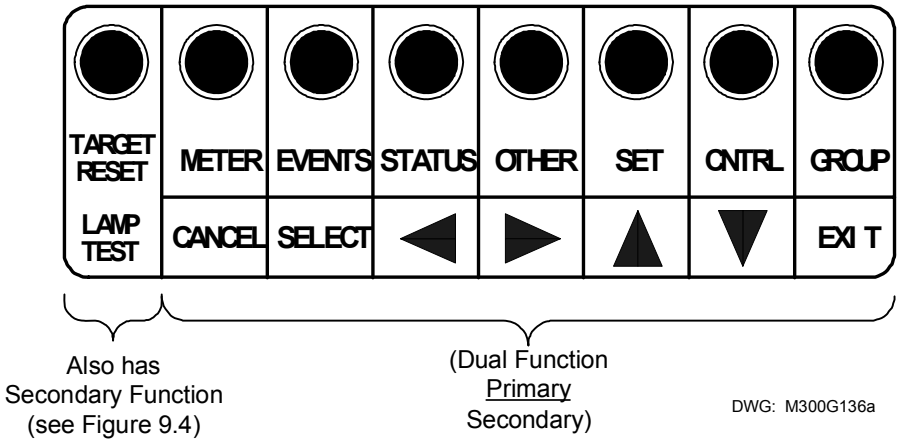

Figure 9.1: SEL-300G Relay Front-Panel Pushbuttons—Overview

Primary Functions

Note in Figure 9.2 and Figure 9.3 that the front-panel pushbutton primary functions correspond to serial port commands—both retrieve the same information or perform the same function. To get more detail on the information provided by the front-panel pushbutton primary functions, refer to the corresponding serial port commands in Table 10.6 in ***Section 10: Serial Port Communications and Commands***.

The Local Control front-panel primary functions do not have a serial port command equivalent. These are discussed in subsection ***Front-Panel Local Control*** in this section.

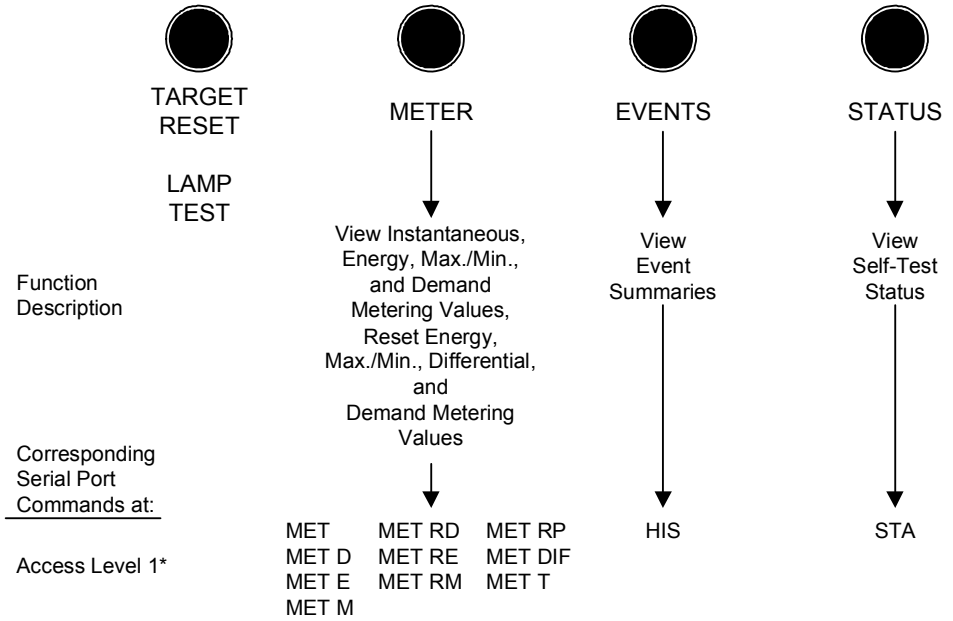

Figure 9.2: SEL-300G Relay Front-Panel Pushbuttons—Primary Functions

Front-Panel Password Security

Refer to the comments at the bottom of Figure 9.3 concerning Access Level B and Access Level 2 passwords. See ***PAS Command (View/Change Passwords)*** in ***Section 10: Serial Port Communications and Commands*** for the list of default passwords and for more information on changing passwords.

To enter the Access Level B and Access Level 2 passwords from the front panel (if required), use the left/right arrow pushbuttons to underscore a password digit position. Then use the up/down arrow pushbuttons to change the digit. Press the SELECT pushbutton once the correct Access Level B or Access Level 2 password is ready to enter.

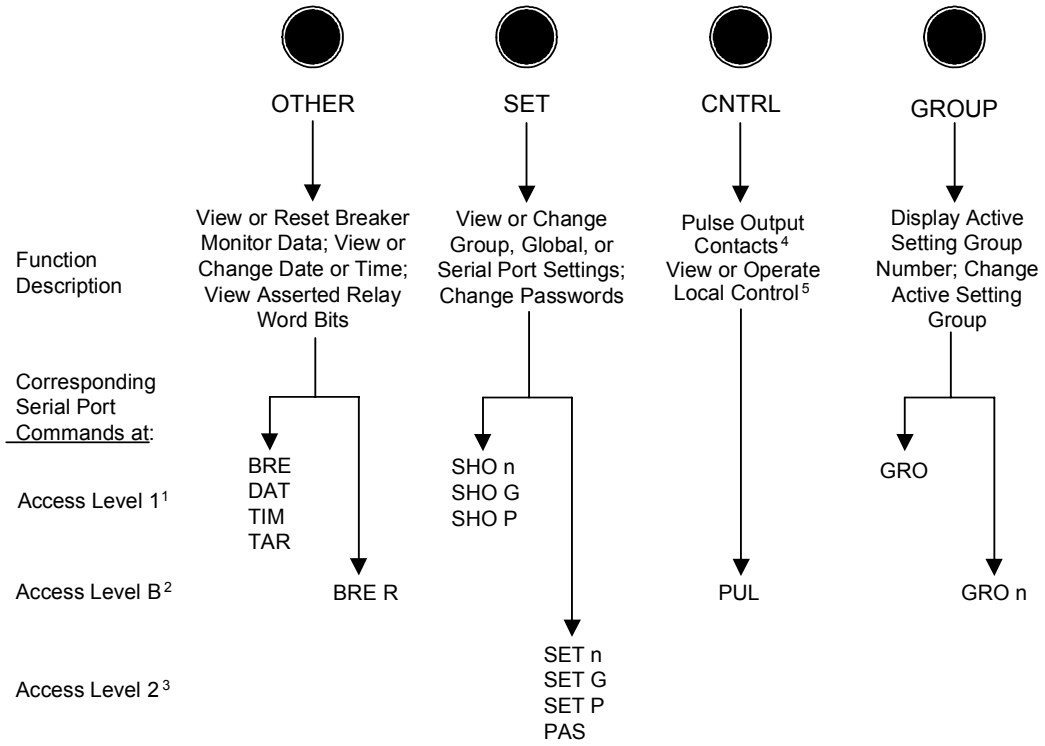

[1] Front-panel pushbutton functions that correspond to Access Level 1 serial port commands do not require the entry of the Access Level 1 password through the front panel.

[2] Front-panel pushbutton functions that correspond to Access Level B serial port commands do require the entry of the Access Level B or Access Level 2 passwords through the front panel if the main board Password jumper is not in place (see Tables 5.5 and 5.6).

[3] Front-panel pushbutton functions that correspond to Access Level 2 serial port commands do require the entry of the Access Level 2 passwords through the front panel if the main board Password jumper is not in place (see Tables 5.5 and 5.6).

[4] Output contacts are pulsed for only 1 second from the front panel.

[5] Local control is not available through the serial port and does not require the entry of a password.

DWG: M300G138a

Figure 9.3: SEL-300G Relay Front-Panel Pushbuttons—Primary Functions (continued)

Secondary Functions

After a primary function is selected (see Figure 9.2 and Figure 9.3), the pushbuttons revert to operating on their secondary functions (see Figure 9.4).

Use the left/right arrows to underscore a desired function. Then press the SELECT pushbutton to select the function.

Use left/right arrows to underscore a desired setting digit. Then use the up/down arrows to change the digit. After the setting changes are complete, press the SELECT pushbutton to select/enable the setting.

Press the CANCEL pushbutton to abort a setting change procedure and return to the previous display. Press the EXIT pushbutton to return to the default display and activate the primary pushbutton functions again (see Figure 9.2 and Figure 9.3).

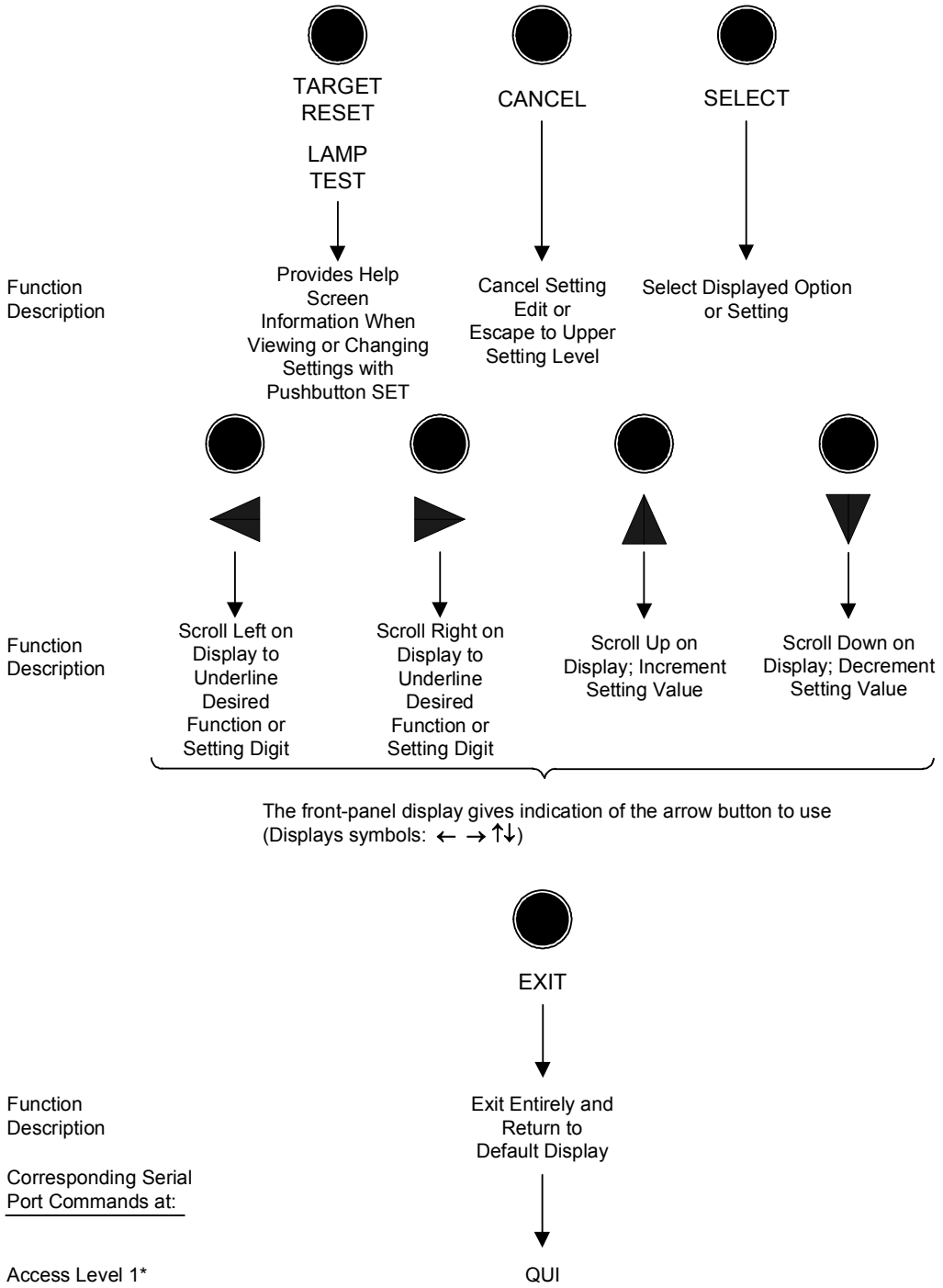

*Front-panel pushbutton functions that correspond to Access Level 1 serial port commands donot require the entry of the Access Level 1 password through the front panel.

DWG: M300G139a

Figure 9.4: SEL-300G Relay Front-Panel Pushbuttons—Secondary Functions

FRONT-PANEL LOCAL CONTROL

Local Control Function Description

Use local control to enable/disable schemes, trip/close breakers, etc., via the front panel.

In more specific terms, local control asserts (sets to logical 1) or deasserts (sets to logical 0) what are called local bits LB1 through LB16. These local bits are available as Relay Word bits and are used in SELOGIC® control equations (see Table 4.6).

Local control can emulate the following switch types in Figure 9.5 through Figure 9.7.

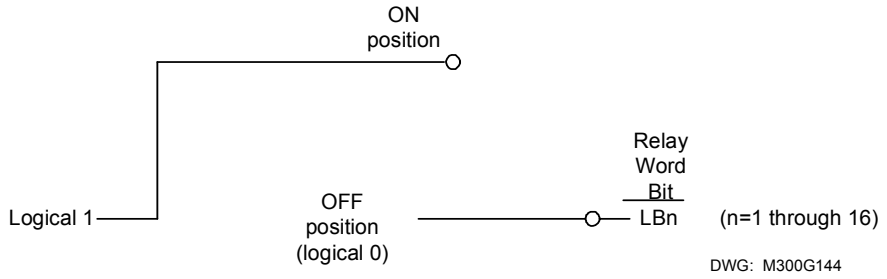

Figure 9.5: Local Control Switch Configured as an ON/OFF Switch

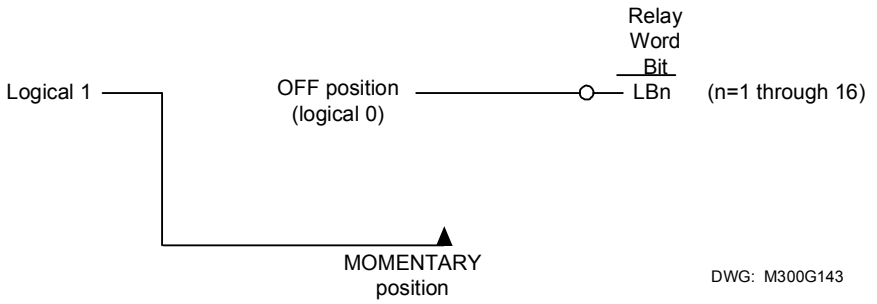

Figure 9.6: Local Control Switch Configured as an OFF/MOMENTARY Switch

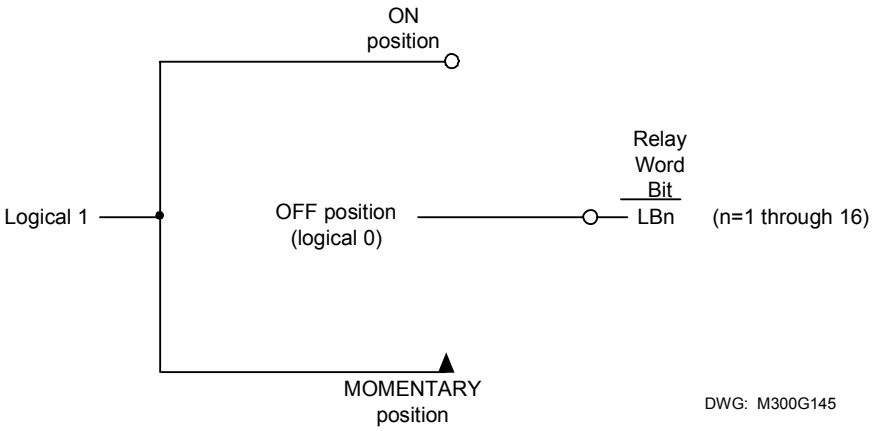

Figure 9.7: Local Control Switch Configured as an ON/OFF/MOMENTARY Switch

Local control switches are created by making corresponding switch position label settings. These text label settings are set with the **SET G** command or viewed with the **SHO G** command via the serial port [see ***Section 6: Enter Relay Settings*** and ***SHO Command (Show/View Settings)*** in ***Section 10: Serial Port Communications and Commands***]. See ***Local Control Switches*** in ***Section 4: SELOGIC Control Equations*** for more information on local control.

View Local Control (with factory settings)

Access local control via the CNTRL pushbutton. If local control switches exist (i.e., corresponding switch position label settings were made), the following message displays with the rotating default display messages.

```
Press CNTRL for
Local Control
```

Press the CNTRL pushbutton, and the first set local control switch displays (shown here with factory default settings):

```
GEN SHUTDOWN  ←→
Position:  RETURN
```

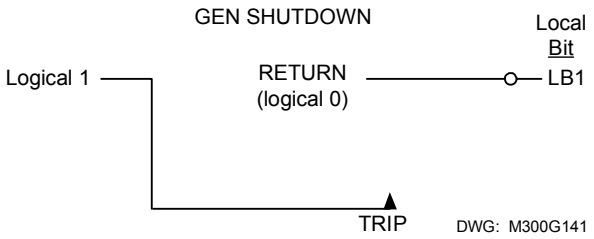

The GEN SHUTDOWN: RETURN/TRIP switch is an OFF/MOMENTARY switch (see Figure 9.6).

There are no more local control switches in the factory default settings. Press the right arrow pushbutton, and scroll to the "output contact testing" function:

```
Output Contact   ←→
Testing
```

This front-panel function provides the same function as the serial port **PUL** command (see Figure 9.3).

Operate Local Control (with factory settings)

Press the right arrow pushbutton, and scroll back to the first set local control switch in the factory default settings:

```
GEN SHUTDOWN ←→
Position:  RETURN
```

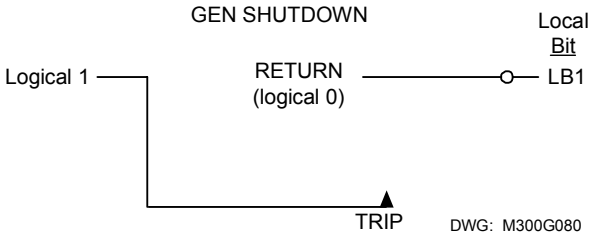

Press the SELECT pushbutton, and the operate option for the displayed local control switch displays:

```
GEN SHUTDOWN
TRIP ? Yes No  ←→
```

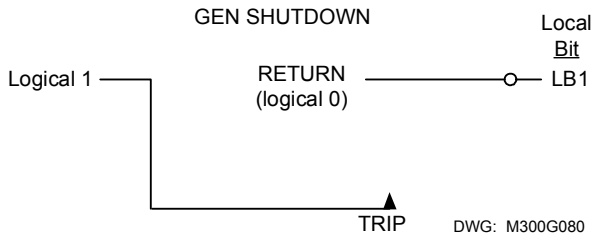

Scroll left with the left arrow button and then select "Yes". The display then shows the new local control switch position:

```
GEN SHUTDOWN
Position:  TRIP
```

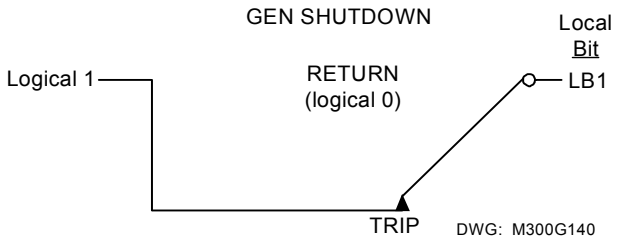

Because this is an OFF/MOMENTARY type switch, the GEN SHUTDOWN switch returns to the RETURN position after momentarily being in the TRIP position. Technically, the GEN SHUTDOWN switch (being an OFF/MOMENTARY type switch) is in the:

> TRIP position for one processing interval (1/4 cycle; long enough to assert the corresponding local bit LB1 to logical 1)

and then returns to the:

> RETURN position (local bit LB1 deasserts to logical 0 again).

On the display, the GEN SHUTDOWN switch is shown to be in the TRIP position for 2 seconds (long enough to be seen), and then it returns to the RETURN position:

```
GEN SHUTDOWN  ←→
Position:  RETURN
```

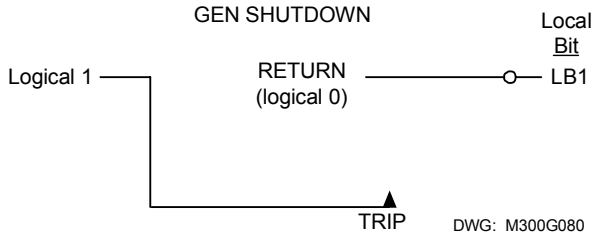

See ***Local Control Switches*** in ***Section 4: SELOGIC Control Equations*** for details on how local bit outputs LB1 and LB2 are set in SELOGIC control equation settings to respectively trip and close a circuit breaker.

Local Control State Retained When Relay De-energized

Local bit states are stored in nonvolatile memory, so when power to the relay is turned off, the local bit states are retained.

If a local bit such as LB1 initially is at logical 1 when power to the relay is turned off and then turned on again, local bit LB1 remains at logical 1. This is similar to a traditional panel, where enabling/disabling of functions is accomplished by panel-mounted switches. If dc control voltage to the panel is lost and then restored again, the switch positions are still in place.

ROTATING DEFAULT DISPLAY

The relay name, "SEL-300G", displays if no local control is operational (i.e., no corresponding switch position label settings were made) and no display point labels or metering quantities are enabled for display.

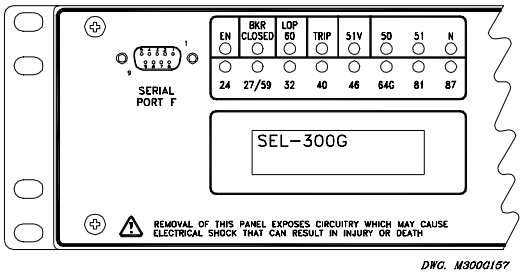

The "Press CNTRL for Local Control" message displays if at least one local control switch is operational. It is a reminder of how to access the local control function. See the preceding discussion in this section and ***Local Control Switches*** in ***Section 4: SELOGIC Control Equations*** for more information on local control.

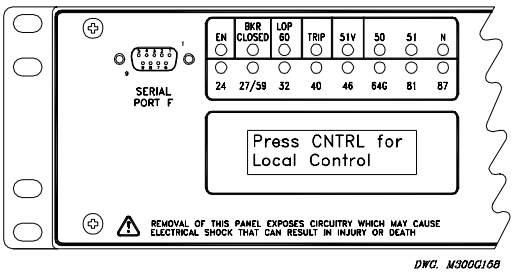

If display point labels and/or rotating meter values also are enabled for display, the "Press CNTRL for Local Control" displays for 2 seconds and is followed by enabled meter quantities and display point labels in subsequent 2-second rotations.

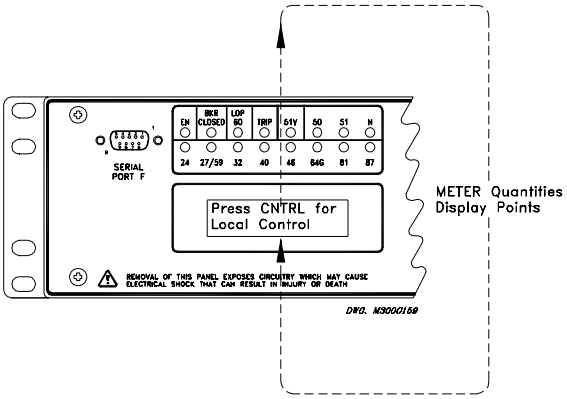

Display point label settings are set with the **SET G** command or viewed with the **SHO G** command via the serial port [see ***Section 6: Enter Relay Settings*** and ***SHO Command (Show/View Settings)*** in ***Section 10: Serial Port Communications and Commands***].

For more detailed information on the logic behind the rotating default display, see ***General Operation of Rotating Text Display Settings*** in ***Section 4: SELOGIC Control Equations.***

TABLE OF CONTENTS

SECTION 10: SERIAL PORT COMMUNICATIONS AND COMMANDS..... 10-1

Introduction 10-1
Port Connector and Communications Cables 10-1
IRIG-B 10-2
SEL-300G to Computer 10-3
SEL-300G to Modem 10-3
SEL-300G to SEL-PRTU 10-4
SEL-300G to SEL Communications Processor 10-4
Communications Protocol 10-5
Hardware Protocol 10-5
Software Protocols 10-6
Serial Port Automatic Messages 10-7
Serial Port Access Levels 10-8
Access Level 0 10-8
Access Level 1 10-9
Access Level B 10-9
Access Level 2 10-9
Command Summary 10-10
Command Explanations 10-12
Access Level 0 Commands 10-12
Access Level 1 Commands 10-13
Access Level B Commands 10-34
Access Level 2 Commands 10-36
Serial Port Error Messages 10-40
Command Summary 10-43

TABLES

Table 10.1: SEL-300G Relay Available Serial Ports 10-1
Table 10.2: Pinout Functions for EIA-232 Serial Ports 2, 3, and F 10-2
Table 10.3: Terminal Functions for EIA-485 Serial Port 1 10-2
Table 10.4: Serial Communications Port Pin/Terminal Function Definitions 10-5
Table 10.5: Serial Port Automatic Messages 10-8
Table 10.6: Serial Port Command Summary 10-10
Table 10.7: SEL-300G Relay Word and Its Correspondence to TAR Command 10-32
Table 10.8: SEL-300G Relay Control Subcommands 10-38
Table 10.9: SEL-300G Error Messages 10-40

FIGURES

Figure 10.1: DB-9 Connector Pinout for EIA-232 Serial Ports 10-1

SECTION 10: SERIAL PORT COMMUNICATIONS AND COMMANDS

INTRODUCTION

Various serial ports are available in the following SEL-300G Relay models:

Table 10.1: SEL-300G Relay Available Serial Ports

Rear Panel			Front Panel
Serial Port 1 (EIA-485, 4-wire)	Serial Port 2 (EIA–232)	Serial Port 3 (EIA–232)	Serial Port F (EIA–232)

Connect the serial port to a computer serial port for local communications or to a modem for remote communications. Other devices useful for communications include the SEL-PRTU, the SEL-2032/SEL-2030/SEL-2020 Communications Processors, the SEL–2600 Series, and the SEL-2800. You can use a variety of terminal emulation programs on your personal computer to communicate with the relay. Examples of PC-based terminal emulation programs include: ACSELERATOR® QuickSet™ SEL-5030 software (see ***Appendix G*** for detail), ProComm Plus®, Relay Gold®, Microsoft® Windows® HyperTerminal®, SmartCOM®, and CROSSTALK®. For the best display, use VT-100 terminal emulation or the closest variation.

The default settings for all serial ports are:

Baud Rate = 2400

Data Bits = 8

Parity = N

Stop Bits = 1

To change the port settings, use the **SET P** command (see ***Section 6: Enter Relay Settings***) or the front-panel SET pushbutton.

PORT CONNECTOR AND COMMUNICATIONS CABLES

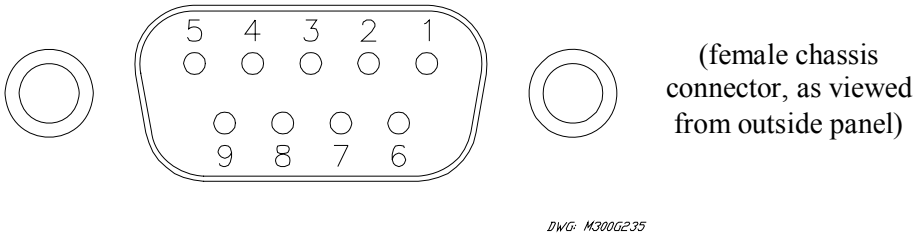

Figure 10.1: DB-9 Connector Pinout for EIA-232 Serial Ports

IRIG-B

You can input the demodulated IRIG-B time code into Serial Port 2 on any of the SEL-300G models. This is handled adeptly by connecting Serial Port 2 of the SEL-300G to an SEL communications processor with Cable C273A (see cable diagrams that follow in this section).

The demodulated IRIG-B time code can be input into the connector for Serial Port 1 on these two models. If demodulated IRIG-B time code is input into this connector, it should not be input into Serial Port 2 and vice versa.

Table 10.2: Pinout Functions for EIA-232 Serial Ports 2, 3, and F

Pin	Port 2	Port 3	Port F
1	N/C or +5 Vdc[a]	N/C or +5 Vdc[a]	N/C
2	RXD	RXD	RXD
3	TXD	TXD	TXD
4	+IRIG-B	N/C	N/C
5, 9	GND	GND	GND
6	–IRIG-B	N/C	N/C
7	RTS	RTS	RTS
8	CTS	CTS	CTS

[a]Refer to *EIA-232 Serial Port Voltage Jumpers on page 5-34 in Section 5: Installation*.

Table 10.3: Terminal Functions for EIA-485 Serial Port 1

Terminal	Function
1	+TX
2	–TX
3	+RX
4	–RX
5	SHIELD
6	N/C
7	+IRIG-B
8	–IRIG-B

The following cable diagrams show several types of EIA-232 serial communications cables that connect the SEL-300G to other devices. These and other cables are available from SEL. Contact the factory for more information.

SEL-300G to Computer

Cable C234A

SEL-300G Relay 9-Pin Male "D" Subconnector		9-Pin DTE* Device 9-Pin Female "D" Subconnector	
RXD	2	3	TXD
TXD	3	2	RXD
GND	5	5	GND
CTS	8	8	CTS
		7	RTS
		1	DCD
		4	DTR
		6	DSR

Cable C227A

SEL-300G Relay 9-Pin Male "D" Subconnector		9-Pin DTE* Device 25-Pin Female "D" Subconnector	
GND	5	7	GND
TXD	3	3	RXD
RXD	2	2	TXD
GND	9	1	RTS
CTS	8	4	CTS
		5	GND
		6	
		8	
		20	

SEL-300G to Modem

Cable C222

SEL-300G Relay 9-Pin Male "D" Subconnector		DCE** Device 25-Pin Female "D" Subconnector	
GND	5	7	GND
TXD	3	2	TXD (IN)
RTS	7	20	DTDR (IN)
RXD	2	3	RXD (OUT)
GND	9	1	GND
CTS	8	8	CD (OUT)

* DTE = Data Terminal Equipment (Computer, Terminal, Printer, etc.)

** DCE = Data Communications Equipment (Modem, etc.)

SEL-300G to SEL-PRTU

Cable C231

SEL-PRTU 9-Pin Male Round Conxall			SEL-300G Relay 9-Pin Male "D" Subconnector	
GND	1	———	5	GND
TXD	2	———	2	RXD
RXD	4	———	3	TXD
CTS	5	———	7	RTS
+12	7	———	8	CTS
GND	9	———	9	GND

SEL-300G to SEL Communications Processors

Cable C273A

SEL Communications Processor 9-Pin Male Round Conxall			SEL-300G Relay 9-Pin Male "D" Subconnector	
RXD	2	———	3	TXD
TXD	3	———	2	RXD
IRIG+	4	———	4	IRIG+
GND	5	———	5	GND
IRIG-	6	———	6	IRIG-
RTS	7	———	8	CTS
CTS	8	———	7	RTS

Table 10.4: Serial Communications Port Pin/Terminal Function Definitions

Pin Function	Definition
N/C	No Connection
+5 Vdc (0.5 A limit)	5 Vdc Power Connection
RXD, RX	Receive Data
TXD, TX	Transmit Data
IRIG-B	IRIG-B Time-Code Input
GND	Ground
SHIELD	Shielded Ground
RTS	Request To Send
CTS	Clear To Send
DCD	Data Carrier Detect
DTR	Data Terminal Ready
DSR	Data Set Ready

For long-distance communications up to 500 meters and for electrical isolation of communications ports, use the SEL-2800 family of Fiber-Optic Transceivers. Contact SEL for more details on these devices.

COMMUNICATIONS PROTOCOL

Hardware Protocol

All EIA-232 serial ports support RTS/CTS hardware handshaking. RTS/CTS handshaking is not supported on the EIA-485 Serial Port 1.

To enable hardware handshaking, use the **SET P** command (or front-panel SET push) to set RTSCTS = Y. Disable hardware handshaking by setting RTSCTS = N.

If RTSCTS = N,	the relay permanently asserts the RTS line until the buffer is full (for SEL PROTO).
If RTSCTS = Y	the relay deasserts RTS when it is unable to receive characters.
If RTSCTS = Y	the relay does not send characters until the CTS input is asserted.
If RTSCTS = H	the relay permanently asserts the RTS line (for MOD PROTO)
When PROTO = LMD	the RTSCTS setting is hidden and hardware handshaking is disabled.

Software Protocols

The SEL-300G provides standard SEL ASCII, SEL Distributed Port Switch Protocol (LMD), SEL *Fast Meter*, SEL Fast SER, SEL Compressed ASCII, and Modbus® RTU protocols. Only one port at a time can be set for the Modbus RTU protocol. The relay activates protocols on a per-port basis.

To select SEL ASCII protocol, set the port PROTO setting to SEL. To select SEL Distributed Port Switch Protocol (LMD), set PROTO = LMD. To select Modbus RTU Protocol, set PROTO = MOD.

SEL *Fast Meter* and SEL Compressed ASCII commands are active when PROTO is set to either SEL or LMD. SEL Fast SER protocol is active when PROTO is set to SEL.

SEL ASCII Protocol

SEL ASCII protocol is designed for manual and automatic communications.

1. All commands received by the relay must be of the form:

   <command><CR> or <command><CRLF>

   A command transmitted to the relay should consist of the command followed by either a CR (carriage return) or a CRLF (carriage return and line feed). You may truncate commands to the first three characters. For example, **EVENT 1 <Enter>** would become **EVE 1 <Enter>**. Upper and lower case characters may be used without distinction, except in passwords.

   Note: The ENTER key on most keyboards is configured to send the ASCII character 13 (^M) for a carriage return. This manual instructs you to press the ENTER key after commands, which should send the proper ASCII code to the relay.

2. The relay transmits all messages in the following format:

   <STX><MESSAGE LINE 1><CRLF>
   <MESSAGE LINE 2><CRLF>
   •
   •
   •
   <LAST MESSAGE LINE><CRLF>< ETX>

   Each message begins with the start-of-transmission character (ASCII 02) and ends with the end-of-transmission character (ASCII 03). Each line of the message ends with a carriage return and line feed.

3. The relay implements XON/XOFF flow control.

   The relay transmits XON (ASCII hex 11) and asserts the RTS output (if hardware hand-shaking enabled) when the relay input buffer is empty.

   The relay transmits XOFF (ASCII hex 13) when the buffer is mostly full. If hardware handshaking is enabled, the relay deasserts the RTS output when the buffer is nearly full. Automatic transmission sources should monitor for the XOFF character so they do not overwrite the buffer. Transmission should terminate at the end of the message in progress when XOFF is received and may resume when the relay sends XON.

4. You can use the XON/XOFF protocol to control the relay during data transmission. When the relay receives XOFF during transmission, it pauses until it receives an XON character. If there is no message in progress when the relay receives XOFF, it blocks transmission of any message presented to its buffer. Messages will be accepted after the relay receives XON.

   The CAN character (ASCII hex 18) aborts a pending transmission. This is useful in terminating an unwanted transmission.

   Control characters can be sent from most keyboards with the following keystrokes:

XON:	**<Ctrl> Q**	(hold down the Control key and press Q)
XOFF:	**<Ctrl> S**	(hold down the Control key and press S)
CAN:	**<Ctrl> X**	(hold down the Control key and press X)

SEL Distributed Port Switch Protocol (LMD)

The SEL Distributed Port Switch Protocol (LMD) permits multiple SEL relays to share a common communications channel. The protocol is selected by setting the port setting PROTO = LMD. See ***Appendix C: SEL Distributed Port Switch Protocol*** for more information on SEL Distributed Port Switch Protocol (LMD).

SEL *Fast Meter* Protocol

SEL *Fast Meter* protocol supports binary messages to transfer metering and control messages. The protocol is described in ***Appendix D: Configuration, Fast Meter, and Fast Operate Commands***.

SEL Compressed ASCII Protocol

SEL Compressed ASCII protocol provides compressed versions of some of the relay ASCII commands. The protocol is described in ***Appendix E: Compressed ASCII Commands***.

SEL Fast Sequential Events Recorder (SER) Protocol

SEL Fast Sequential Events Recorder (SER) Protocol, also known as SEL Unsolicited Sequential Events Recorder, provides SER events to an automated data collection system. SEL Fast SER Protocol is available on any serial port. The protocol is described in ***Appendix I: Unsolicited Fast SER Protocol.***

Modbus RTU Protocol

Modbus RTU protocol provides binary multidrop communication with the SEL-300G. The protocol is described in ***Appendix F: Modbus RTU Communications Protocol***.

SERIAL PORT AUTOMATIC MESSAGES

When the serial port AUTO setting is Y, the relay sends automatic messages to indicate specific conditions. The automatic messages are described in Table 10.5.

Table 10.5: Serial Port Automatic Messages

Condition	Description
Power Up	The relay sends a message containing the present date and time, relay and terminal identifiers, and the Access Level 0 prompt when the relay is turned on.
Event Trigger	The relay sends an event summary each time an event report is triggered. See ***Section 11: Event Reports and SER Functions***.
Group Switch	The relay displays the active settings group after a group switch occurs. See ***GRO n Command*** (***Change Active Settings Group***) in this section.
Self-Test Warning or Failure	The relay sends a status report each time a self-test warning or failure condition is detected. See ***STA Command*** (***Relay Self-Test Status***) in this section.

SERIAL PORT ACCESS LEVELS

Commands can be issued to the relay via the serial port to view metering values, change relay settings, etc. The available serial port commands are listed in Table 10.6. The commands can be accessed only from the corresponding access level as shown in Table 10.6. The access levels are:

Access Level 0 (the lowest access level)

Access Level 1

Access Level B

Access Level 2 (the highest access level)

Note: In this manual, commands you type appear in bold/uppercase: **OTTER**.
Computer keys you press appear in bold/ brackets: **<Enter>**.

Access Level 0

Once serial port communications are established with the relay, the relay sends the following prompt:

```
=
```

This is referred to as Access Level 0. The only commands available at Access Level 0 are the **ACC**, **CAS** and **HELP** commands. Enter the **ACC** command at the Access Level 0 prompt:

=ACC <Enter>

The **ACC** command takes the relay to Access Level 1 [see ***ACC, BAC, and 2AC Commands (Go to Access Level 1, B, or 2)*** in the ***Command Explanations*** subsection for more detail].

Access Level 1

When the relay is in Access Level 1, the relay sends the following prompt:

```
=>
```

Commands **ACC** through **TRI** in Table 10.6 are available from Access Level 1. For example, enter the **MET** command at the Access Level 1 prompt to view metering data:

=>**MET <Enter>**

The **2AC** command allows the relay to go to Access Level 2 [see ***ACC, BAC, and 2AC Commands (Go to Access Level 1, B, or 2)*** in the ***Command Explanations*** subsection for more detail]. Enter the **2AC** command at the Access Level 1 prompt:

=>**2AC <Enter>**

The **BAC** command allows the relay to go to Access Level B [see ***ACC, BAC, and 2AC Commands (Go to Access Level 1, B, or 2)*** in the ***Command Explanations*** subsection for more detail]. Enter the **BAC** command at the Access Level 1 prompt:

=>**BAC <Enter>**

Access Level B

When the relay is in Access Level B, the relay sends the prompt:

```
==>
```

Commands **ACC** through **PUL** in Table 10.6 are available from Access Level B. For example, enter the **CLO** command at the Access Level B prompt to close the circuit breaker:

==>**CLO <Enter>**

The 2AC command allows the relay to go to Access Level 2 [see ***ACC, BAC, and 2AC Commands (Go to Access Level 1, B, or 2)*** in the ***Command Explanations*** subsection for more detail]. Enter the **2AC** command at the Access Level B prompt:

==>**2AC <Enter>**

Access Level 2

When the relay is in Access Level 2, the relay sends the prompt:

```
=>>
```

Commands **ACC** through **STA C** in Table 10.6 are available from Access Level 2. For example, enter the **SET** command at the Access Level 2 prompt to make relay settings:

=>>**SET <Enter>**

COMMAND SUMMARY

Table 10.6 alphabetically lists the serial port commands within a given access level. Much of the information available from the serial port commands is also available via the front-panel pushbuttons. The correspondence between the serial port commands and the front-panel pushbuttons also is given in Table 10.6. See ***Section 9: Front-Panel Operation*** for more information on the front-panel pushbuttons.

The serial port commands at the different access levels offer varying levels of control:

- The Access Level 1 commands primarily allow the user to look at information only (settings, metering, etc.), not change it.
- The Access Level B commands primarily allow the user to operate output contacts or change the active setting group.
- The Access Level 2 commands primarily allow the user to change relay settings.

Again, a higher access level can access the serial port commands in a lower access level. The commands are shown in uppercase letters, but they can also be entered with lowercase letters.

Table 10.6: Serial Port Command Summary

Access Level	Prompt	Serial Port Command	Command Description	Corresponding Front-Panel Pushbutton
0	=	**ACC**	Go to Access Level 1	
0	=	**CAS**	Compressed ASCII configuration data	
0	=	**HELP**	Display available commands	
1	=>	**2AC**	Go to Access Level 2	
1	=>	**BAC**	Go to Breaker Access Level	
1	=>	**BRE**	Breaker monitor data	OTHER
1	=>	**CEV**	Compressed event report	
1	=>	**CHIS**	Compressed history	
1	=>	**CST**	Compressed status report	
1	=>	**DAT**	View/change date	OTHER
1	=>	**EVE**	Event reports	
1	=>	**GRO**	Display active setting group number	GROUP
1	=>	**HIS**	Event summaries/histories	EVENTS
1	=>	**IRI**	Synchronize to IRIG-B	
1	=>	**MET**	Metering data	METER
1	=>	**MET D**	Demand and peak demand data	
1	=>	**MET DIF**	Differential meter quantities [300G1, 300G3]	
1	=>	**MET E**	Energy metering data	
1	=>	**MET M**	Max/min metering data	
1	=>	**MET RD**	Reset demand ammeter	
1	=>	**MET RE**	Reset energy metering	
1	=>	**MET RM**	Reset max/min metering	
1	=>	**MET RP**	Reset peak demand ammeter	
1	=>	**MET T**	Thermal Metering Data	
1	=>	**PRO**	Display generator operation profile	
1	=>	**QUI**	Quit access level	
1	=>	**SER**	Sequential Events Recorder	

Access Level	Prompt	Serial Port Command	Command Description	Corresponding Front-Panel Pushbutton
1	=>	**SHO**	Show/view settings	SET
1	=>	**STA**	Relay self-test status	STATUS
1	=>	**SYN**	View latest synch-check reports [300G2, 300G3]	
1	=>	**TAR**	Display relay element status	OTHER
1	=>	**TIM**	View/change time	OTHER
1	=>	**TRI**	Trigger an event report	
B	==>	**CLO**	Close breaker	
B	==>	**GRO *n***	Change active setting group	GROUP
B	==>	**OPE**	Open breaker	
B	==>	**PUL**	Pulse output contact	CNTRL
2	=>>	**BRE *n***	Preload/reset breaker wear	OTHER
2	=>>	**CON**	Control remote bit	
2	=>>	**COP**	Copy setting group	
2	=>>	**HIS C**	Clear event history buffer	
2	=>>	**PAS**	View/change passwords	SET
2	=>>	**PRO R**	Reset generator operating profile	
2	=>>	**SET**	Change settings	SET
2	=>>	**STA C**	Clear self-test status and restart relay	
2	=>>	**SYN R**	Clear synch-check reports and reset breaker close time average [300G2, 300G3]	

The relay responds with "Invalid Access Level" if a command is entered from an access level lower than the specified access level for the command. The relay responds:

```
Invalid Command
```

to commands not listed above or entered incorrectly.

Many of the command responses display the following header at the beginning:

```
GENERATOR   Date: 03/05/97    Time: 17:03:26.484
TERMINAL
```

The definitions are:

GENERATOR: This is the RID setting (the relay is shipped with the default setting RID = UNIT 1; see ***Identifier Labels*** in ***Section 6: Enter Relay Settings***).

TERMINAL: This is the TID setting (the relay is shipped with the default setting TID = STATION A; see ***Identifier Labels*** in ***Section 6: Enter Relay Settings***).

Date: This is the date the command response was given [except for relay response to the **EVE** command (Event), where it is the date the event occurred]. You can modify the date display format (Month/Day/Year or Year/Month/Day) by changing the DATE_F relay setting.

Time: This is the time the command response was given (except for relay response to the **EVE** command, where it is the time the event occurred).

The serial port command explanations that follow in the ***Command Explanations*** subsection are in the same order as the commands listed in Table 10.6.

COMMAND EXPLANATIONS

Access Level 0 Commands

HELP Command (Display Available Serial Port Commands)

Use the **HELP** command to display the serial port commands available at each access level. The command displays only the available commands for the active access level.

For more details regarding a particular command, type **HELP CMD**, where CMD is the name of the command you are interested in.

ACC, BAC, and 2AC Commands (Go to Access Level 1, B, or 2)

The **ACC**, **BAC**, and **2AC** commands provide entry to the multiple access levels. Different commands are available at the different access levels as shown in Table 10.6. Commands **ACC**, **BAC**, and **2AC** are explained together because they operate similarly.

ACC moves from Access Level 0 to Access Level 1.

BAC moves from Access Level 1 to Access Level B.

2AC moves from Access Level 1 or B to Access Level 2.

Password Requirements and Default Passwords

Passwords are required if the main board Password jumper is **not** in place (Password jumper = OFF). Passwords are not required if the main board Password jumper is in place (Password jumper = ON). Refer to Table 5.5 and Table 5.6 for Password jumper information. See ***PAS Command (View/Change Passwords)*** explanation later in this section for the list of default passwords and for more information on changing passwords.

Access Level Attempt (Password Required)

Assume the following conditions: Password jumper = OFF (not in place), Access Level = 0.

At the Access Level 0 prompt, enter the **ACC** command:

=**ACC <Enter>**

Because the Password jumper is not in place, the relay asks for the Access Level 1 password to be entered:

Password: ? @@@@@@

The relay is shipped with the default Access Level 1 password shown in the table under the **PAS** command later in this section. At the above prompt enter the default password and press the **<Enter>** key.

The relay responds:

```
GENERATOR            Date: 01/17/98   Time:  09:46:47.237
TERMINAL

Level 1
=>
```

The "=>" prompt indicates the relay is now in Access Level 1.

If the entered password is incorrect, the relay asks for the password again (Password: ?). The relay will ask up to three times. If the requested password is entered incorrectly three times, the relay closes the ALARM contact for one second and remains at Access Level 0 ("=" prompt).

Access Level Attempt (Password not Required)

Assume the following conditions: Password jumper = ON (in place), Access Level = 0.

At the Access Level 0 prompt, enter the **ACC** command:

=ACC <Enter>

Because the Password jumper is in place, the relay does not ask for a password; it goes directly to Access Level 1. The relay responds:

```
GENERATOR                        Date: 01/17/98    Time: 09:46:47.237
TERMINAL

Level 1
=>
```

The "=>" prompt indicates the relay is now in Access Level 1.

The above two examples demonstrate how to go from Access Level 0 to Access Level 1. The procedure to go from Access Level 1 to Access Level B, Access Level 1 to Access Level 2, or Access Level B to Access Level 2 is much the same, with command BAC or 2AC entered at the access level screen prompt. The relay closes the ALARM contact for one second after a successful Level B or Level 2 access. If access is denied, the ALARM contact closes for one second.

CAS Command

The Compressed ASCII configuration provides data for an external computer to extract data from other Compressed ASCII commands. For details on this and other Compressed ASCII commands see ***Appendix E: Compressed ASCII Commands***.

Access Level 1 Commands

BRE Command (Breaker Monitor Data)

Use the **BRE** command to view the breaker monitor report.

```
=>BRE <Enter>

GENERATOR                        Date: 01/17/98    Time: 09:46:51.613
TERMINAL

Int Trips=  0
 IA=   0.0 IB=        0.0 IC= 0.0 kA

Ext Trips=      0
 IA=   0.0 IB=        0.0 IC= 0.0 kA

Percent wear: A=      0 B=    0 C= 0

LAST RESET 01/17/98 09:45:35

=>
```

See the **BRE *n*** command in ***Access Level 2 Commands*** that follows in this section and ***Breaker Monitor*** in ***Section 8: Monitoring and Metering Functions*** for further details on the breaker monitor.

CEV Command

Displays event report in Compressed ASCII format. For details on this and other Compressed ASCII commands see ***Appendix E: Compressed ASCII Commands***.

CHIS Command

Displays history in Compressed ASCII format. For details on this and other Compressed ASCII commands see ***Appendix E: Compressed ASCII Commands***.

DAT Command (View/Change Date)

DAT displays the date stored by the internal calendar/clock. If the date format setting DATE_F is set to MDY, the date is displayed as month/day/year. If the date format setting DATE_F is set to YMD, the date is displayed as year/month/day.

To set the date, type **DATE mm/dd/yy <Enter>** if the DATE_F setting is MDY. If the DATE_F is set to YMD, enter **DATE yy/mm/dd <Enter>**. To set the date to February 1, 1998, enter:

```
=>DATE 2/1/98 <Enter>

2/1/98

=>
```

You can separate the month, day, and year parameters with spaces, commas, slashes, colons, and semicolons.

EVE Command (Event Reports)

Use the **EVE** command to view event reports. See ***Section 11: Event Reports and SER Functions*** for further details on retrieving event reports.

GRO Command (Display Active Setting Group Number)

Use the **GRO** command to display the active settings group number. See the ***GRO n Command (Change Active Setting Group)*** in ***Access Level B Commands*** that follows in this section and ***Section 3: Auxiliary Function Settings*** for further details on settings groups.

HIS Command (Event Summaries/History)

HIS *x* displays event summaries or allows you to clear event summaries (see ***HIS C Command (Clear Event Summaries/History)*** on page 10-38) from nonvolatile memory.

If no parameters are specified with the **HIS** command:

= **HIS <Enter>**

the relay displays the most recent event summaries in reverse chronological order.

If ***x*** is a number (e.g., 6):

= HIS 6 <Enter>

the relay displays the *x* most recent event summaries. The maximum number of available event summaries is a function of the LER (length of event report) setting. The relay saves up to twenty-nine 15-cycle, fifteen 30-cycle, eight 60-cycle, or two 180-cycle reports if the setting LER is 15, 30, 60, and 180, respectively.

The event summaries include the date and time the event was triggered, the type of event, the maximum phase current in the event, the power system frequency, the number of the active setting group, and the front-panel targets.

To display the relay event summaries, enter the following command:

```
=>HIS <Enter>
GENERATOR                        Date: 01/21/98    Time: 14:51:21.370
TERMINAL

#     DATE      TIME     EVENT   CURR  FREQ  GRP TARGETS

1  01/20/98 09:09:58.814 ER         4  60.01  2
2  01/20/98 09:09:58.615 TRIP    1470  60.16  2  50 N 27/59
3  01/20/98 09:09:55.614 ER      1008  60.01  2

=>
```

The event type listed in the EVENT column is one of the following:

TRIP:	event report generated by assertion of Relay Word bit TRIP
ER:	event report generated by assertion of SELOGIC® control equation event report trigger condition setting ER
PULSE:	event report generated by execution of the **PUL** (Pulse) command
TRIG:	event report generated by execution of the **TRI** (Trigger) command

The TARGETS column will display any of the following illuminated front-panel target LEDs if the event report is generated by a trip (assertion of a TRIP*n* Relay Word bit).

For more information on front-panel target LEDs, see ***Section 9: Front-Panel Operation***. For more information on event reports, see ***Section 11: Event Reports and SER Functions***.

IRI Command (Synchronize to IRIG-B Time Code)

IRI directs the relay to read the demodulated IRIG-B time code at the serial port input.

To force the relay to synchronize to IRIG-B, enter the following command:

=>**IRI <Enter>**

If the relay successfully synchronizes to IRIG-B, it sends the following header and access level prompt:

```
GENERATOR                              Date: 03/05/97    Time: 10:15:09.609
TERMINAL

=>
```

If no IRIG-B code is present at the serial port input or if the code cannot be read successfully, the relay responds:

```
IRIG-B DATA ERROR

=>
```

If an IRIG-B signal is present, the relay synchronizes its internal clock with IRIG-B. It is not necessary to issue the **IRI** command to synchronize the relay clock with IRIG-B. Use the **IRI** command to determine if the relay is properly reading the IRIG-B signal.

MET Command (Metering Data)

The **MET** commands provide access to the relay metering data. Metering quantities include phase voltages and currents, sequence component voltages and currents, power, frequency, substation battery voltage, energy, demand, field insulation resistance (if there is an external SEL-2664 module connected, and 64FOPT is set to EXT), and maximum/minimum logging of selected quantities. To make the extensive amount of meter information manageable, the relay divides the displayed information into four groups: Instantaneous, Demand, Energy, and Maximum/Minimum.

MET k – Instantaneous Metering

The **MET k** command displays instantaneous magnitudes (and angles if applicable) of the following quantities:

Currents	$I_{A,B,C,N}$	Input currents (A primary)
	I_G	Residual ground current (A primary; $I_G = 3I_0 = I_A + I_B + I_C$)
	$I_{A87,B87,C87}$	Input Currents (A primary, Models 0300G1 and 0300G3)

Voltages	$V_{A,B,C,N}$	Wye-connected voltage inputs (kV primary)
	$V_{AB,BC,CA,N}$	Delta-connected voltage inputs (kV primary)
	V_S	Synch voltage input (kV primary, Models 0300G2 and 0300G3)
	V_{P3}	Third-harmonic terminal voltage (V secondary, DELTA_Y=Y)
	V_{N3}, V_{N1}	Third-harmonic and fundamental neutral voltages (V secondary)
Power	$MW_{A,B,C}$	Single-phase megawatts (DELTA_Y = Y)
	MW_{3P}	Three-phase megawatts
	$MVAR_{A,B,C}$	Single-phase megavars (DELTA_Y = Y)
	$MVAR_{3P}$	Three-phase megavars
Power Factor	$PF_{A,B,C,3P}$	Single- (DELTA_Y = Y) and three-phase power factor; leading or lagging
Sequence	I_1, $3I_2$, $3I_0$	Positive-, negative-, and zero-sequence currents (A primary)
	V_1, V_2	Positive- and negative-sequence voltages (kV primary)
	$3V_0$	Zero-sequence voltage (kV primary)
Frequency	FREQ (Hz)	Instantaneous power system frequency measured on voltage channel VA. When the channel VA voltage is below 13 V, the relay will display Nominal Frequency (setting FNOM) with an asterisk (e.g., FRQ = 60* on front panel).
Station DC	VDC (V)	Voltage at POWER terminals (input into station battery monitor)
Volts/Hertz	V/Hz (%)	Generator volts/hertz (percent of nominal voltage/frequency)
Field Insulation	Rf (kOhms)	Generator field winding insulation resistance. If 64FOPT = EXT and 64FFLT Relay Word bit equals zero, the insulation resistance value is displayed. If 64FOPT = EXT and 64FFLT Relay Word bit equals one, the message “FIELD INSULATION Rf (kOhms) Fail” is displayed. If 64FOPT = NONE, nothing is displayed.

The angles are referenced to the A-phase or AB-phase voltage (depending on the setting DELTA_Y = Y or D respectively) if the voltage is greater than 13 V secondary; otherwise, the angles are referenced to A-phase current. The angles range from –179.99 to 180.00 degrees.

To view instantaneous metering values, enter the command:

=>**MET *k* <Enter>**

where *k* is an optional parameter to specify the number of times (1–32767) to repeat the meter display. If *k* is not specified, the meter report is displayed once. The output from an SEL-300G is shown:

```
=>MET <Enter>

GENERATOR                          Date: 02/20/04    Time: 07:58:54.990
TERMINAL

                 A         B         C         N         G
I MAG (A)      904.052   903.011   908.535     0.034     4.286
I ANG (DEG)     -4.96   -124.88    115.02     56.40     90.93

                 A         B         C         N
V MAG (KV)      7.910     7.905     7.917     0.000
V ANG (DEG)     0.00   -119.89    120.09      8.22

                VP3       VN3       VN1
V MAG (sV)      0.003     0.001     0.001

                 A         B         C         3P
MW              7.125     7.111     7.165    21.401
MVAR            0.619     0.622     0.635     1.875
PF              0.996     0.996     0.996     0.996
                LAG       LAG       LAG       LAG

                 I1       3I2       3I0        V1        V2       3V0
MAG            905.199     6.096     4.286     7.911     0.008     0.004
ANG   (DEG)     -4.94   -124.45     90.93      0.07    -99.02    -48.37

FREQ (Hz)       60.01                VDC (V) 122.5
V/Hz (percent)  99.60

FIELD INSULATION Rf (kOhms)   16666.6

=>
```

MET D – Demand Metering

The **MET D** command displays the demand and peak demand values of the following quantities:

Currents	$I_{A,B,C,N}$	Input currents (A primary)
	I_G	Residual ground current (A primary; IG =3I0 = IA + IB + IC)
	$3I_2$	Negative-sequence current (A primary)
Power	$MW_{A,B,C}$	Single-phase megawatts (DELTA_Y = Y)
	MW_{3P}	Three-phase megawatts
	$MVAR_{A,B,C}$	Single-phase megavars (DELTA_Y = Y)
	$MVAR_{3P}$	Three-phase megavars
Reset Time	Demand, Peak	Last time the demands and peak demands were reset

To view demand metering values, enter the command:

=>**MET D <Enter>**

The output from an SEL-300G is shown:

```
=>MET D <Enter>

GENERATOR                        Date: 01/20/98    Time: 07:59:03.241
TERMINAL

            IA        IB        IC        IN        IG        3I2
DEMAND     948.3     949.7     952.4       0.0       4.7       4.0
PEAK       964.0     965.4     968.1       0.7       9.2       4.3

              MWA     MWB     MWC     MW3P    MVARA   MVARB   MVARC   MVAR3P
DEMAND IN      0.0     0.0     0.0     0.0     0.1     0.1     0.1     0.3
PEAK IN        0.0     0.0     0.0     0.0     0.1     0.1     0.1     0.4
DEMAND OUT     7.5     7.5     7.5    22.5     0.4     0.4     0.4     1.1
PEAK OUT       7.6     7.6     7.6    22.9     0.4     0.4     0.4     1.1
LAST DEMAND RESET 01/19/98 16:49:52.998   LAST PEAK RESET 01/19/98 16:49:48.744

=>
```

For more information on demand metering, see ***Demand Metering*** in ***Section 3: Auxiliary Function Settings***.

MET DIF – Differential Metering (Models 0300G1 and 0300G3)

The **MET DIF** command displays the following differential element quantities:

Operate Currents	A-, B-, and C-phase (IOP1, IOP2, and IOP3, respectively) in multiples of TAP and percent of their respective restraint quantities.
Restraint Currents	A-, B-, and C-phase (IRT1, IRT2, and IRT3, respectively) in multiples of TAP.
Second-Harmonic Currents	A-, B-, and C-phase (I1F2, I2F2, and I3F2, respectively) in multiples of TAP and percent of their respective operate quantities.

To view differential meter quantities, enter the command:

=>**MET DIF <Enter>**

The output from an SEL-300G is shown below:

```
=>MET DIF <Enter>

GENERATOR                        Date: 03/06/98    Time: 08:21:19.744
TERMINAL

                        Operate Currents            Restraint Currents
                      IOP1      IOP2      IOP3      IRT1      IRT2      IRT3
I (Mult. of Tap)      0.00      0.00      0.00      0.00      0.00      0.00
  (% of IRTn)       999.99    999.99    200.00

                     Second Harmonic Currents
                     I1F2      I2F2      I3F2
I (Mult. of Tap)      0.00      0.00      0.00
  (% of IOPn)        50.00    100.00    100.00

=>
```

MET E – Energy Metering

The **MET E** command displays the following quantities:

Energy	$MWh_{A,B,C}$	Single-phase megawatt hours (in and out) (DELTA_Y = Y)
	MWh_{3P}	Three-phase megawatt hours (in and out)
	$MVARh_{A,B,C}$	Single-phase megavar hours (in and out) (DELTA_Y = Y)
	$MVARh_{3P}$	Three-phase megavar hours (in and out)
Reset Time		Last time the energy meter was reset

To view energy metering values, enter the command:

=>**MET E <Enter>**

The output from an SEL-300G is shown:

```
=>MET E <Enter>

GENERATOR                        Date: 01/20/98    Time: 07:59:18.992
TERMINAL

        MWhA     MWhB     MWhC    MWh3P   MVARhA   MVARhB   MVARhC   MVARh3P
IN       0.0      0.0      0.0      0.0      1.8      1.7      1.8      5.2
OUT    113.3    113.5    113.9    340.7      4.7      4.7      4.7     14.1
LAST RESET 01/19/98 16:50:09.245

=>
```

For more information on energy metering, see ***Energy Metering*** in ***Section 8: Monitoring and Metering Functions***.

MET M – Maximum/Minimum Metering

The **MET M** command displays the maximum and minimum values of the following quantities:

Currents	$I_{A,B,C,N}$	Input currents (A primary)
	I_G	Residual ground current (A primary; IG =3I0 = IA + IB + IC)
	$I_{A87,B87,C87}$	Input currents (A primary, Models 0300G1 and 0300G3)
Voltages	$V_{A,B,C,N}$	Wye-connected voltage inputs (kV primary)
	$V_{AB,BC,CA,N}$	Delta-connected voltage inputs (kV primary)
	V_{P3}	Third-harmonic terminal voltage (V secondary, DELTA_Y = Y)
	V_{N3}, V_{N1}	Third-harmonic and fundamental neutral voltages (V secondary)
	V_S	Input voltage (kV primary, Models 0300G2 and 0300G3)
Power	MW_{3P}	Three-phase megawatts
	$MVAR_{3P}$	Three-phase megavars
Reset Time		Last time the maximum/minimum meter was reset

To view maximum/minimum metering values, enter the command:

=>**MET M <Enter>**

The output from an SEL-300G is shown:

```
=>MET M <Enter>

GENERATOR                        Date: 01/20/98    Time: 07:59:23.617
TERMINAL

            Max    Date      Time             Min    Date      Time
IA(A)      1006.0  01/19/98  17:02:44.279     902.0  01/19/98  16:58:30.636
IB(A)      1006.0  01/19/98  16:54:48.507     900.0  01/19/98  17:10:14.856
IC(A)      1010.0  01/19/98  17:31:37.065     902.0  01/19/98  16:57:53.967
IN(A)     RESET                              RESET
IG(A)     RESET                              RESET
VA(kV)        7.9  01/19/98  16:54:47.067       7.8  01/19/98  16:59:49.284
VB(kV)        7.9  01/19/98  16:55:29.712       7.7  01/19/98  17:34:47.067
VC(kV)        7.9  01/19/98  16:56:16.796       7.7  01/19/98  17:34:47.067

VN(kV)    RESET                              RESET
VP3(sV)   RESET                              RESET
VN3(sV)   RESET                              RESET
VN1(sV)   RESET                              RESET
MW3P         23.9  01/20/98  02:14:08.726      21.4  01/19/98  16:58:15.446
MVAR3P       -2.1  01/19/98  20:07:20.752       0.0  01/19/98  16:55:37.509
LAST RESET 01/19/98 16:49:41.243

=>
```

All values will display RESET until new maximum/minimum values are recorded. For more information on maximum/minimum metering, see ***Maximum/Minimum Metering*** in ***Section 8: Monitoring and Metering Functions***.

MET RD

Reset the accumulated demand values using the **MET RD** command.

MET RE

Reset the measured energy values using the **MET RE** command.

MET RM

Reset the max/min meter values using the **MET RM** command.

MET RP

Reset the peak demand values using the **MET RP** command.

MET T – Thermal Metering

The **METER T** command displays the temperatures of any connected RTDs to the SEL-2600 Module. The command will display the temperature values –0– for all the connected RTDs if either the SEL-2600 RTD Module or its communications to the SEL-300G fails.

To view the thermal metering values, enter the command:

=>**MET T <Enter>**

The output from an SEL-300G is shown:

```
=> METER T <Enter>

GENERATOR   Date: 11/14/00    Time: 16:08:12.450
TERMINAL

Input Temperature Data (deg. F)
 1 BRG  =    96
 2 BRG  =    91
 3 BRG  =    94
 4 NONE
 5 WDG  =    140
 6 WDG  =    137
 7 WDG  =    136
 8 NONE
 9 WDG  =    142
10 NONE
11 AMB  =    78
12 OTH  =    105

=>
```

PRO Command (Display Generator Operation Profile)

The **PRO** command displays the generator operation profile, which includes:

- Present accumulated time in 81AC Off-Frequency Time Accumulators, if enabled
- Total generator running hours, stopped hours, full load hours, and percent running time
- Accumulated I_2^2t
- Three-phase power output averages
- Generator time of operation in 0.1 Hz frequency bands from 40.0 to 69.9 Hz

To view the generator operation profile, enter the command:

=>**PRO <Enter>**

The output from an SEL-300G is shown:

```
=>PRO <Enter>

GENERATOR                        Date: 01/17/98    Time: 09:47:45.114
TERMINAL

81AC Off-Frequency Time Accumulators                     Since: 01/17/98 09:46
Frequency Band 1, 59.5 to 58.8:     0.0s or    0.0% of limit setting
Frequency Band 2, 58.8 to 58.0:     0.0s or    0.0% of limit setting
Frequency Band 3, 58.0 to 57.5:     0.0s or    0.0% of limit setting
Frequency Band 4, 57.5 to 57.0:     0.0s or    0.0% of limit setting
Frequency Band 5, 57.0 to 56.5:     0.0s or    0.0% of limit setting
Frequency Band 6, 56.5 to 40.0:     0.0s or    0.0% of limit setting

Operating History, elapsed time in dd:hh:mm:ss           Since: 01/17/98 09:46
Running hours:       0:00:00:00
Stopped hours:  >    0:00:01:18
Full load hours:     0:00:00:00
Time running:         0.0%
Accumulated I2*I2*t (A*A*s):        0.0
```

```
Average power                                                Since: 01/17/98 09:46
MW out:           0.00
MVAR out:         0.00
MVAR in:          0.00
Power factor:     0.00 LEAD

Press RETURN to continue
Operating Freq (Hz), elapsed time in dd:hh:mm:ss             Since: 01/17/98 09:46
40.0           40.1           40.2           40.3           40.4
0:00:00:00     0:00:00:00     0:00:00:00     0:00:00:00     0:00:00:00
40.5           40.6           40.7           40.8           40.9
0:00:00:00     0:00:00:00     0:00:00:00     0:00:00:00     0:00:00:00
.
.
.
67.5           67.6           67.7           67.8           67.9
0:00:00:00     0:00:00:00     0:00:00:00     0:00:00:00     0:00:00:00

68.0           68.1           68.2           68.3           68.4
0:00:00:00     0:00:00:00     0:00:00:00     0:00:00:00     0:00:00:00
68.5           68.6           68.7           68.8           68.9
0:00:00:00     0:00:00:00     0:00:00:00     0:00:00:00     0:00:00:00
69.0           69.1           69.2           69.3           69.4
0:00:00:00     0:00:00:00     0:00:00:00     0:00:00:00     0:00:00:00
69.5           69.6           69.7           69.8           69.9
0:00:00:00     0:00:00:00     0:00:00:00     0:00:00:00     0:00:56:56

=>
```

Section 8: Monitoring and Metering Functions provides additional information on the SEL-300G generator operating profile function.

QUI Command (Quit Access Level)

The **QUI** command returns the relay to Access Level 0.

To return to Access Level 0, enter the command:

=>**QUI <Enter>**

The relay sets the port access level to 0 and responds:

```
GENERATOR                              Date: 03/05/97    Time: 08:55:33.986
TERMINAL

=
```

The "=" prompt indicates the relay is back in Access Level 0.

The **QUI** command terminates the SEL Distributed Port Switch Protocol (LMD) connection if it is established (see ***Appendix C: SEL Distributed Port Switch Protocl*** for details on SEL Distributed Port Switch Protocol [LMD]).

SER Command (Sequential Events Recorder Report)

Use the **SER** command to view the Sequential Events Recorder (SER) report. For more information on SER reports, see ***Section 11: Event Reports and SER Functions***.

SHO Command (Show/View Settings)

Use the **SHO** command to view relay settings, SELOGIC control equations, global settings, serial port settings, SER settings, and text label settings. Below are the **SHO** command options.

SHO *n*	Show relay settings. *n* specifies the setting group (1 or 2); *n* defaults to the active setting group if not listed.
SHO G	Show global settings.
SHO P *n*	Show serial port settings. *n* specifies the port (1, 2, 3, or F); *n* defaults to the active port if not listed.
SHO R	Show SER settings.

You may append a setting name to each of the commands to specify the first setting to display (e.g., **SHO 1 E50P** displays the setting Group 1 relay settings starting with setting E50P). The default is the first setting.

The **SHO** commands display only the enabled settings. To display all settings, including disabled/hidden settings, append an A to the **SHO** command (e.g., **SHO 1 A**).

Following are sample **SHOWSET** commands for the SEL-300G model 0300G10, showing all the setting categories. The settings for the other SEL-300G models are similar.

```
=>SHO <Enter>
Group 1

RID     =GENERATOR
TID     =TERMINAL
CTR     = 100       CTRD    = 100       CTRN    = 100       PTR     = 100.00
PTRN    = 100.00    PTRS    = 100.00
VNOM    = 115.0     INOM    = 5.0       EBUP    = D         ELE     = N
E24     = Y         E25     = Y         E27     = Y         E32     = Y
E40     = Y         E46     = Y         E50     = Y         E50_87  = N
E51     = Y         E59     = N         E64     = Y         E78     = 1B
E81     = 1         E81AC   = 6         E87     = G         ESV     = 6
ESL     = 5         EDEM    = ROL

Z1R     = 8.0       Z1O     = 0.0       MTA1    = 88        Z1CMP   = 0
Z1D     = 0.00      Z2R     = 16.0      Z2O     = 0.0       MTA2    = 85
Z2CMP   = 0         Z2D     = 0.00      21PTC   =!3PO

24D1P   = 105       24D1D   = 1.00      24CCS   = ID        24IP    = 105
24IC    = 2.0       24ITD   = 0.1       24D2P2  = 176       24D2D2  = 3.00
24CR    = 240.00
24TC    =!60LOP

Press RETURN to continue
SYNCP   = VA        25VLO   = 58.3      25VHI   = 69.7      25VDIF  = 3.3
25RCF   = 1.000     GENV+   = Y         25SLO   = 0.05      25SHI   = 0.10
COMPA   = 0         25ANG1  = 5         25ANG2  = 15        CANGLE  =-3
TCLOSD  = 0.150     CFANGL  = 30        27VSP   = 15.0
BSYNCH  =!3PO

27P1P   = 54.0      27P2P   = OFF       27V1P   = OFF       27PP1   = 93.5
27PP2   = 93.5
32P1P   =-0.0500    32P1D   = 20.00     32P2P   =-0.1000    32P2D   = 5.00
32PTC   =!60LOP
```

```
40Z1P   = 13.4      40XD1   =-2.5       40Z1D   = 0.00      40Z2P   = 25.0
40XD2   =-2.5       40Z2D   = 0.50
40ZTC   =!60LOP
46Q1P   = 8         46Q1D   = 30.00     46Q2P   = 8         46Q2K   = 10
46QTC   =1

Press RETURN to continue
50P1P   = OFF       50P2P   = OFF       50N1P   = 2.50      50N1D   = 0.10
50N2P   = OFF       50G1P   = OFF       50G2P   = OFF

51NP    = 0.50      51NC    = U2        51NTD   = 3.00      51NRS   = Y
51NTC   =1
51GP    = OFF
3POD    = 0.00      50LP    = 0.25
52A     =IN101

64G1P   = 5.0       64G1D   = 0.75      64G2P   = 2.5       64RAT   = 1.0
64G2D   = 0.08
64GTC   =1

64FOPT  = EXT       64F1P   = 50        64F1D   = 5
64F2P   = 5         64F2D   = 2         64FTC   = 1

78FWD   = 8.0       78REV   = 8.0       78R1    = 6.0       78R2    = 6.0
78TD    = 0.00      78TDURD = 3.00      50ABC   = 0.25      OOSTC   =1

27B81P  = 20.00     81D1P   = 59.10     81D1D   = 0.03

Press RETURN to continue
UBND1   = 59.5      LBND1   = 58.8      TBND1   = 3000.00
LBND2   = 58.0      TBND2   = 540.00
LBND3   = 57.5      TBND3   = 100.00
LBND4   = 57.0      TBND4   = 14.00
LBND5   = 56.5      TBND5   = 2.40
LBND6   = 40.0      TBND6   = 1.00
62ACC   = 0.16
ONLINE  =!27B81 * !3PO

TAP1    = 5.00      TAPD    = 5.00      U87P    = 10.0      O87P    = 0.30
SLP1    = 40
87B     =0

RTDOPT  = NONE
DMTC    = 15        PDEMP   = 5.50      NDEMP   = 1.00      GDEMP   = 1.00
QDEMP   = 2.50
INAD    =SV2T * 50L
INADPU  = 0.25      INADDO  = 0.13
SV1     =27V1 * 40Z2

Press RETURN to continue
SV1PU   = 0.25      SV1DO   = 0.00
SV2     =!50L * 27P1 * !IN102
SV2PU   = 2.00      SV2DO   = 1.00
SV3     =51NT + 50N1T + 51CT + 51VT + 64G1T + 64G2T + INADT + LT1
          * 32P2T
SV3PU   = 0.00      SV3DO   = 0.00

SV4     =24C2T + 32P1T + 40Z1T + 40Z2T
SV4PU   = 0.00      SV4DO   = 0.00
SV5     =0
SV5PU   = 0.00      SV5DO   = 0.00
SV6     =0SV6PU   = 0.00      SV6DO   = 0.00
SET1    =LB1 + RB1
RST1    =3PO
SET2    =INADT
RST2    =TRGTR
SET3    =!(DCLO * DCHI)
RST3    =TRGTR
SET4    =0
RST4    =1

Press RETURN to continue
```

```
SET5    =SV4
RST5    =TRGTR
TDURD   = 0.16
TR1     =SV3 + SV4 + 46Q2T + 81D1T + 81D2T
ULTR1   =3PO
TR2     =SV3 + SV4
ULTR2   =!TR2
TR3     =SV3 + LT1
ULTR3   =!TR3
TR4     =SV3
ULTR4   =!TR4
CLEN    =1
CL      =0
ULCL    =1
CLSD    = 0.00
ER      =/24C2 + /32P1 + /46Q2 + /51N + /51C + /51V + /64G1 + /64G2
          + /60LOP + /81D1 + /81D2 + \81D1 + \81D2 + /BNDA

          + /BNDT + /INAD

OUT101  =TRIP1

Press RETURN to continue
OUT102  =TRIP2
OUT103  =TRIP3
OUT104  =TRIP4
OUT105  =CLOSE
OUT106  =60LOP
OUT107  =24D1T + 46Q1T + BCW + BNDA + BNDT + !(DCLO * DCHI)
OUT201  =0
OUT202  =0
OUT203  =0
OUT204  =0
OUT205  =0
OUT206  =0
OUT207  =0
OUT208  =0
OUT209  =0
OUT210  =0
OUT211  =0
OUT212  =0

SCEUSE     56.4
GR1CHK     514A

=>
```

```
=>SHO G <Enter>

LER     = 15        PRE     = 4         FP_TO   = 15        DATE_F  = MDY
DCLOP   = OFF       DCHIP   = OFF       FNOM    = 60        PHROT   = ABC
DELTA_Y = Y
TGR     = 3
SS1     =0
SS2     =0
BKMON   =TRIP
COSP1   = 10000     COSP2   = 150       COSP3   = 12
KASP1   = 1.2       KASP2   = 8.0       KASP3   = 20.0
IN101D  = 0.50      IN102D  = 0.50      IN103D  = 0.50      IN104D  = 0.50
IN105D  = 0.50      IN106D  = 0.50
NLB1    =GEN SHUTDOWN   CLB1    =RETURN  SLB1    =        PLB1    =TRIP
NLB2    =
NLB3    =
NLB4    =
NLB5    =
NLB6    =
Press RETURN to continue
NLB7    =
NLB8    =
NLB9    =
NLB10   =
NLB11   =
NLB12   =
NLB13   =
NLB14   =
NLB15   =
NLB16   =
FP_I    = Y         FP_VPP  = Y         FP_VP   = N         FP_MW   = Y
FP_FR   = Y         FP_87   = N
DP1     =IN101
DP1_1   =GEN BKR CLOSED   DP1_0   =GEN BKR OPEN
 DP2     =IN102
DP2_1   =FIELD BKR CLOSED DP2_0   =FIELD BKR OPEN
DP3     =SG1
DP3_1   =GROUP 1 ACTIVE   DP3_0   =GROUP 2 ACTIVE
DP4     =SV2T
Press RETURN to continue
DP4_1   =INAD ARMED       DP4_0   =
DP5     =LT2
DP5_1   =INAD TRIP        DP5_0   =
DP6     =LT1
DP6_1   =SHUTDOWN TRIP    DP6_0   =
DP7     =LT5
DP7_1   =AB OP TRIP       DP7_0   =
DP8     =0
DP8_1   =                 DP8_0   =
DP9     =0
DP9_1   =                 DP9_0   =
DP10    =0
DP10_1  =                 DP10_0  =
DP11    =0
DP11_1  =                 DP11_0  =
DP12    =0
DP12_1  =                 DP12_0  =
DP13    =0
DP13_1  =                 DP13_0  =
DP14    =0
```

```
Press RETURN to continue
DP14_1  =                DP14_0  =
DP15    =0
DP15_1  =                DP15_0  =
DP16    =0
DP16_1  =                DP16_0  =
SCEUSE     42.9
GBLCHK     5290

=>
```

```
=> SHO R <Enter>

SER1    =51NT 50N1T 51CT 51VT 64G1T 64G2T SV3 81D1 81D1T 81D2 81D2T 51N 50N1
51C 51V 64G1 64G2 INAD INADT
SER2    =DP3 LB1 RB1 LT3 TRGTR BCW IN101 IN102 TRIP1 TRIP2 TRIP3 TRIP4 BNDT
24C2T 32P1T 24C2 32P1 SV4 SV2T
SER3    =24D1 24D1T 46Q1 46Q1T 60LOP BNDA 32P2 32P2T SWING OOS OOST
SER4    =0

EALIAS  = 20
ALIAS1  =SV3 FAULT_TRIP TRIPPED RESET
ALIAS2  =SV4 AB_OP_TRIP TRIPPED RESET
ALIAS3  =81D1T FREQ_TR_1 TRIPPED RESET
ALIAS4  =81D2T FREQ_TR_2 TRIPPED RESET
ALIAS5  =TRIP1 GEN_MAIN_TR TRIPPED RESET
ALIAS6  =TRIP2 FIELD_BKR_TR TRIPPED RESET
ALIAS7  =TRIP3 PRIME_MVR_TR TRIPPED RESET
ALIAS8  =TRIP4 86_TRIP TRIPPED RESET
ALIAS9  =BNDA FREQ_AC_AL ALARM RESET
ALIAS10 =BNDT FREQ_AC_TR TRIPPED RESET

Press RETURN to continue
ALIAS11 =LB1 LCL_SHUTDOWN TRIP RESET
ALIAS12 =RB1 REM_SHUTDOWN TRIP RESET
ALIAS13 =LT3 DC_FAULT FAULT RESET
ALIAS14 =DP3 GROUP_CHANGE GROUP_1_ACTIVE GROUP_2_ACTIVE
ALIAS15 =TRGTR TARGET_RESET PRESSED RELEASED
ALIAS16 =SV2T INAV_ENR_SCHM ARMED RESET
ALIAS17 =INADT INAV_ENR_SCHM TRIPPED TR_RESET
ALIAS18 =IN101 GEN_MAIN_BKR CLOSED OPENED
ALIAS19 =IN102 FIELD_BKR CLOSED OPENED
ALIAS20 =NA  _

=>
```

STA Command (Relay Self-Test Status)

The **STA** command displays the status report, showing the relay self-test information.

To view a status report, enter the command:

=>**STA *n* <Enter>**

where *n* is an optional parameter to specify the number of times (1–32767) to repeat the status display. If *n* is not specified, the status report is displayed once. The output of an SEL-300G is shown:

```
=>STA <Enter>

GENERATOR                          Date: 01/20/00    Time: 10:20:19.544
TERMINAL

FID=SEL-300G-X207-V31H425XX4X-Z001001-D20000217       CID=04B0
SELF TESTS
W=Warn    F=Fail
       IA      IB      IC      IN      VA      VB      VC      VN      MOF
OS     0       1       0       1       1       0       0       1       0
       +5V_PS  +5V_REG -5V_REG +12V_PS -12V_PS +15V_PS -15V_PS
PS      4.95    5.01   -4.99    11.96  -12.05   14.90  -14.93
       TEMP    RAM     ROM     A/D     CR_RAM  EEPROM  IO_BRD
        42.5   OK      OK      OK      OK      OK      OK

FGM    COMM    MODULE
       OK      OK
Relay Enabled
```

STA Command Row and Column Definitions

FID	FID is the firmware identifier string. It identifies the firmware revision.
CID	CID is the firmware checksum identifier.
OS	OS = Offset; displays measured dc offset voltages in millivolts for the current and voltage channels. The MOF (master) status is the dc offset in the A/D circuit when a grounded input is selected.
PS	PS = Power Supply; displays power supply voltages in Vdc for the power supply outputs.
TEMP	Displays the internal relay temperature in degrees Celsius.
RAM, ROM, CR_RAM (critical RAM), and EEPROM	These tests verify the relay memory components. The columns display OK if memory is functioning properly; the columns display FAIL if the memory area has failed.
A/D	Analog to Digital convert status.
IO_BRD	Extra I/O board status.

W (Warning) or F (Failure) is appended to the values to indicate an out-of-tolerance condition.

FGM Communication and Field Ground Module (SEL-2664) status values:

COMM	MODULE	Description
OK	OK	Receiving valid communications.
OK	FAIL	Receiving communications from device with a status word indicating a remote failure.

COMM	MODULE	Description
FAIL	N/A	Lost communications.
FAIL	FAIL	Lost communications, but last communication from device contained a status word indicating a remote failure.

The relay latches all self-test warnings and failures in order to capture transient out-of-tolerance conditions.

Refer to Table 4.5 in ***Section 4: SELOGIC Control Equations*** for self-test thresholds and corrective actions.

SYN Command (Synch-Check Function Report) (Models 0300G2 and 0300G3)

The **SYN** command displays the latest of three reports stored by the relay synch-check function in nonvolatile memory. For more information on SYN reports, see ***Section 11: Event Reports and SER Functions***.

TAR Command (Display Relay Element Status)

The **TAR** command displays the status of front-panel target LEDs or relay elements, whether they are asserted or deasserted. The elements are represented as Relay Word bits and are listed in rows of eight, called Relay Word rows. For additional information on individual Relay Word bits, refer to ***Section 4: SELOGIC Control Equations***.

A Relay Word bit is either at a logical 1 (asserted) or a logical 0 (deasserted). Relay Word bits are used in SELOGIC control equations. See ***Section 6: Enter Relay Settings*** and ***Section 4: SELOGIC Control Equations***.

The serial port **TAR** command does not remap the front-panel target LEDs. But the execution of the equivalent **TAR** command via the front-panel display does remap the bottom row of the front-panel target LEDs (see Figure 9.3, pushbutton <OTHER>).

The **TAR** command options are:

TAR *n k* Shows Relay Word row number *n* (0–43). *k* is an optional parameter to specify the number of times (1–32767) to repeat the Relay Word row display. If *k* is not specified, the Relay Word row is displayed once.

TAR name *k* Shows Relay Word row containing Relay Word bit name (e.g., **TAR 40Z1** displays Relay Word Row 5). Valid names are shown in Table 10.7. *k* is an optional parameter to specify the number of times (1–32767) to repeat the Relay Word row display. If *k* is not specified, the Relay Word row is displayed once.

TAR F *n k* X

The **TAR F** command works like the **TAR** command, but it also remaps the second row of target LEDs on the front panel to follow the default row. This may be useful, for example, in testing situations where a display on the relay front-panel LEDs of element pickup or operation may be desired.

n specifies a new default Relay Word row by entering the number or the specific Relay Word bit name. If *n* is not specified, the last default row is displayed.

k specifies a repeat count of the command for the serial port display. The default is 1.

X allows remapping of the LEDs to a Relay Word row without changing the default row.

The default row number returns to 0 when the serial port times out, the **QUI** command is executed, or the **TAR R** command is executed.

The front-panel LEDs remain remapped until the front panel times out, the **TAR R** command is executed, or the TARGET RESET pushbutton is pushed.

TAR R

Clears front-panel tripping target LEDs. Unlatches the trip logic for testing purposes (see Figure 4.6). Shows Relay Word Row 0.

Table 10.7: SEL-300G Relay Word and Its Correspondence to TAR Command

TAR 0 (Front-Panel LEDs)	EN	BKR CLOSED	LOP 60	TRIP	21/51V	50	51	N
TAR 1 (Front-Panel LEDs)	24	27/59	32	40	46	64G	81	87
TAR 2	24TC	24D1	24D1T	24C2	24C2T	24CR	SS1	SS2
TAR 3	27P1	27P2	27PP1	27V1	59P1	59P2	59G1	59G2
TAR 4	32PTC	32P1	32P1T	32P2	32P2T	59V1	59Q	59PP1
TAR 5	40ZTC	40Z1	40Z1T	40Z2	40Z2T	SWING	SG1	SG2
TAR 6	46QTC	46Q1	46Q1T	46Q2	46Q2T	46Q2R	INAD	INADT
TAR 7	78R1	78R2	78Z1	OOSTC	51CTC	51C	51CT	51CR
TAR 8	51GTC	51G	51GT	51GR	51NTC	51N	51NT	51NR
TAR 9	51VTC	51V	51VT	51VR	PDEM	QDEM	GDEM	NDEM
TAR 10	50P1	50P1T	50P2	50P2T	50G1	50G1T	50G2	50G2T
TAR 11	50N1	50N1T	50N2	50N2T	CC	CL	CLOSE	ULCL
TAR 12	64GTC	64G1	64G1T	64G2	64G2T	OOS	60LOP	CLEN
TAR 13	BKMON	BCW	BCWA	BCWB	BCWC	FAULT	DCLO	DCHI
TAR 14	81D1	81D2	81D3	81D4	81D5	81D6	3PO	52A
TAR 15	81D1T	81D2T	81D3T	81D4T	81D5T	81D6T	27B81	50L
TAR 16	ONLINE	BND1A	BND1T	BND2A	BND2T	BND3A	BND3T	BNDA
TAR 17	TRGTR	BND4A	BND4T	BND5A	BND5T	BND6A	BND6T	BNDT
TAR 18	TRIP	TRIP1	TRIP2	TRIP3	TRIP4	OC1	OC2	OC3
TAR 19	TR1	TR2	TR3	TR4	ULTR1	ULTR2	ULTR3	ULTR4
TAR 20	LB1	LB2	LB3	LB4	LB5	LB6	LB7	LB8
TAR 21	LB9	LB10	LB11	LB12	LB13	LB14	LB15	LB16
TAR 22	RB1	RB2	RB3	RB4	RB5	RB6	RB7	RB8
TAR 23	RB9	RB10	RB11	RB12	RB13	RB14	RB15	RB16
TAR 24	21CTC	21C1P	21C1T	21C2P	21C2T	ZLOAD	T64G	N64G
TAR 25	SV1	SV2	SV3	SV4	SV1T	SV2T	SV3T	SV4T
TAR 26	SV5	SV6	SV7	SV8	SV5T	SV6T	SV7T	SV8T
TAR 27	SV9	SV10	SV11	SV12	SV9T	SV10T	SV11T	SV12T
TAR 28	SV13	SV14	SV15	SV16	SV13T	SV14T	SV15T	SV16T
TAR 29	DP8	DP7	DP6	DP5	DP4	DP3	DP2	DP1
TAR 30	DP16	DP15	DP14	DP13	DP12	DP11	DP10	DP9
TAR 31	ER	OOST	IN106	IN105	IN104	IN103	IN102	IN101
TAR 32	ALARM	OUT107	OUT106	OUT105	OUT104	OUT103	OUT102	OUT101
TAR 33	87B	87BL1	87BL2	87BL3	87R	87R1	87R2	87R3

TAR 34	87U	87U1	87U2	87U3	50H1	50H1T	50H2	50H2T
TAR 35	50Q1	50Q1T	50Q2	50Q2T	50R1	50R1T	50R2	50R2T
TAR 36	59VP	59VS	CFA	BKRCF	BSYNCH	25C	25A1	25A2
TAR 37	59PP2	27PP2	SF	VDIF	GENVHI	GENVLO	GENFHI	GENFLO
TAR 38	87NTC	87N1P	87N1T	87N2P	87N2T	MPP1P	MABC1P	27VS
TAR 39	21PTC	21P1P	21P1T	21P2P	21P2T	MPP2P	MABC2P	*
TAR 40	IN208	IN207	IN206	IN205	IN204	IN203	IN202	IN201
TAR 41	64FTC	64F1	64F1T	64F2	64F2T	64FFLT	*	*
TAR 42	OUT201	OUT202	OUT203	OUT204	OUT205	OUT206	OUT207	OUT208
TAR 43	OUT209	OUT210	OUT211	OUT212	*	*	*	*
TAR 44	50H2A	50H2B	50H2C	*	*	*	*	*
TAR 45	*	*	*	*	*	*	*	*
TAR 46	SET1	SET2	SET3	SET4	SET5	SET6	SET7	SET8
TAR 47	SET9	SET10	SET11	SET12	SET13	SET14	SET15	SET16
TAR 48	RST1	RST2	RST3	RST4	RST5	RST6	RST7	RST8
TAR 49	RST9	RST10	RST11	RST12	RST13	RST14	RST15	RST16
TAR 50	LT1	LT2	LT3	LT4	LT5	LT6	LT7	LT8
TAR 51	LT9	LT10	LT11	LT12	LT13	LT14	LT15	LT16
TAR 52	OTHTRIP	OTHALRM	AMBTRIP	AMBALRM	BRGTRIP	BRGALRM	WDGTRIP	WDGALRM
TAR 53	RTDFLT	*	*	*	*	*	*	2600IN
TAR 54	RTD4TR	RTD4AL	RTD3TR	RTD3AL	RTD2TR	RTD2AL	RTD1TR	RTD1AL
TAR 55	RTD8TR	RTD8AL	RTD7TR	RTD7AL	RTD6TR	RTD6AL	RTD5TR	RTD5AL
TAR 56	RTD12TR	RTD12AL	RTD11TR	RTD11AL	RTD10TR	RTD10AL	RTD9TR	RTD9AL

Command **TAR 60LOP 10** is executed in the following example:

```
=>TAR 60LOP 10 <Enter>

64GTC 64G1   64G1T  64G2   64G2T   *     60LOP  CLEN
1      0      0      0      0      0      0      0
1      0      0      0      0      0      0      0
1      0      0      0      0      0      0      0
1      0      0      0      0      0      0      0
1      0      0      0      0      0      0      0
1      0      0      0      0      0      0      0
1      0      0      0      0      0      0      0
1      0      0      0      0      0      0      0

64GTC 64G1   64G1T  64G2   64G2T   *     60LOP  CLEN
1      0      0      0      0      0      0      0
1      0      0      0      0      0      0      0

=>
```

Note that Relay Word row containing the 60LOP bit is repeated 10 times. In this example, the 100 percent stator ground protection elements are enabled (64GTC = logical 1) and 60LOP is deasserted (60LOP = logical 0). Command **TAR 12** will report the same data since the 60LOP bit is in Row 12 of the Relay Word.

TIM Command (View/Change Time)

TIM displays the relay clock. To set the clock, type **TIM** and the desired setting, then press **<Enter>**. Separate the hours, minutes, and seconds with colons, semicolons, spaces, commas, or slashes. To set the clock to 23:30:00, enter:

```
=>TIM 23:30:00 <Enter>
23:30:00
=>
```

TRI Command (Trigger Event Report)

Issue the **TRI** command to generate an event report:

```
=>TRI <Enter>
Triggered

=>
```

If the serial port AUTO setting = Y, the relay sends the summary event report:

```
GENERATOR                        Date: 01/17/98    Time: 09:48:37.989
TERMINAL

Event: TRIG  Frequency:  60.00
Targets:
Currents (A Pri), ABCNGQ:      1     1     1     1     2     1
=>
```

See ***Section 11: Event Reports and SER Functions*** for more information on event reports.

Access Level B Commands

CLO Command (Close Breaker)

The **CLO** (Close) command asserts the CLOSE Relay Word bit (if CLEN = logical 1), which can be programmed to an output contact (e.g., OUT105 = CLOSE) to close circuit breakers. See Figure 4.8.

To issue the **CLO** command, enter the following:

```
=>>CLO <Enter>
Close Breaker  (Y/N) ? Y <Enter>
Are you sure (Y/N) ? Y <Enter>
=>>
```

Typing **N <Enter>** after either of the above prompts will abort the command.

The **CLO** command is supervised by the main board Breaker jumper (see Table 5.6). If the Breaker jumper is not in place (Breaker jumper = OFF), the relay does not execute the **CLO** command and responds:

```
Aborted: No Breaker Jumper
```

GRO n Command (Change Active Setting Group)

The **GRO *n*** command changes the active setting group to setting Group *n*. To change to settings Group 2, enter the following:

```
==>GRO 2 <Enter>
Change to Group 2
Are you sure (Y/N) ? Y <Enter>
Active Group = 2

==>
```

The relay switches to Group 2 and pulses the ALARM contact. If the serial port AUTO setting = Y, the relay sends the group switch report:

```
==>

GENERATOR                              Date: 02/02/97    Time: 09:40:34.611
TERMINAL

Active Group = 2
==>
```

If either SELOGIC control equation setting SS1 or SS2 asserts to logical 1, the active setting group may not be changed with the **GRO** command—SELOGIC control equations settings SS1 and SS2 have priority over the **GRO** command in active setting group control.

For example, assume setting Group 1 is the active setting group and the SS1 setting is asserted to logical 1 (e.g., SS1 = IN104 and optoisolated input IN104 is asserted). An attempt to change to setting Group 2 with the **GRO 2** command will not be accepted:

```
==>GRO 2 <Enter>
No group change (see manual)
Active Group = 1
==>
```

For more information on setting group selection, see ***Section 4: SELOGIC Control Equations***.

OPE n Command (Open Breaker)

The **OPE *n*** (Open) command asserts the TRIP*n* Relay Word bit, which can be programmed to an output contact (e.g., OUT101 = TRIP1) to trip circuit breakers. See Figure 4.6.

To issue the **OPE 1** command, enter the following:

```
=>>OPE 1 <Enter>
Open Breaker  (Y/N) ? Y <Enter>
Are you sure (Y/N) ? Y <Enter>
=>>
```

Typing **N <Enter>** after either of the above prompts will abort the command.

The **OPE *n*** command is supervised by the main board Breaker jumper (see Table 5.6). If the Breaker jumper is not in place (Breaker jumper = OFF), the relay does not execute the **OPE** command and responds:

```
Aborted: No Breaker Jumper
```

PUL Command (Pulse Output Contact)

The **PUL** command allows you to pulse any of the output contacts for a specified length of time. The command format is:

PUL x y

where:

x is the output name (e.g., OUT107, ALARM, OUT211—see Figure 4.16 and Figure 4.17).

y is the pulse duration (1–30) in seconds. If y is not specified, the pulse duration defaults to 1 second.

To pulse OUT101 for 5 seconds:

```
=>>PUL OUT101 5 <Enter>
Are you sure (Y/N) ? Y <Enter>
=>>
```

If the response to the "Are you sure (Y/N) ?" prompt is "N" or "n", the command is aborted.

The **PUL** command is supervised by the main board Breaker jumper (see Table 5.6). If the Breaker is not in place (Breaker jumper = OFF), the relay does not execute the **PUL** command and responds:

```
Aborted:  No Breaker Jumper
```

The relay generates an event report if any of the OUT101 through OUT107 contacts are pulsed. The **PUL** command is used primarily for testing purposes.

Access Level 2 Commands

BRE n Command (Preload/Reset Breaker Wear)

Use the **BRE W** command to preload breaker wear. For example, to preload the breaker wear to 25 percent, 28 percent, and 24 percent for the respective phases, issue the following command.

```
==>BRE W <Enter>
Breaker Wear Percent Preload

A-phase % = 0 ? 10
B-phase % = 0 ? 12
C-phase % = 0 ? 10
Are you sure (Y/N) ? Y <Enter>

GENERATOR                        Date: 01/17/98    Time: 10:04:11.330
TERMINAL

Int Trips=      0
 IA=      0.0 IB=      0.0 IC=      0.0 kA

Ext Trips=      0
 IA=      0.0 IB=      0.0 IC=      0.0 kA

Percent wear: A=  10 B=  12 C=  10

LAST RESET 01/17/98 09:45:35

==>
```

Use the **BRE R** command to reset the breaker monitor:

```
==>BRE R <Enter>

Reset Trip Counters and Accumulated Currents/Wear
Are you sure (Y/N) ? Y <Enter>

GENERATOR                        Date: 01/17/98    Time: 10:04:28.007
TERMINAL

Int Trips=      0
 IA=      0.0 IB=      0.0 IC=      0.0 kA

Ext Trips=      0
 IA=      0.0 IB=      0.0 IC=      0.0 kA

Percent wear: A=   0 B=   0 C=   0

LAST RESET 01/17/98 10:04:27

==>
```

See ***Breaker Monitor*** in ***Section 8: Monitoring and Metering Functions*** for further details on the breaker monitor.

CON Command (Control Remote Bit)

The **CON** command is a two-step command that allows you to control Relay Word bits RB1 through RB16. At the Access Level 2 prompt, type **CON**, a space, and the number of the remote bit you wish to control (1–16). The relay responds by repeating your command followed by a colon. At the colon, type the Control subcommand you wish to perform (see Table 10.8).

The following example shows the steps necessary to pulse Remote Bit 5 (RB5):

```
=>>CON 5 <Enter>
CONTROL RB5: PRB 5 <Enter>
=>>
```

You must enter the same remote bit number in both steps in the command. If the bit numbers do not match, the relay responds “Invalid Command.”

Table 10.8: SEL-300G Relay Control Subcommands

Subcommand	Description
SRB *n*	Set Remote Bit *n* ("ON" position)
CRB *n*	Clear Remote Bit *n* ("OFF" position)
PRB *n*	Pulse Remote Bit *n* for 1/4 cycle ("MOMENTARY" position)

See Remote Control Switches in Section 4: SELOGIC Control Equations for more information.

COP m n Command (Copy Setting Group)

Copy relay and SELOGIC control equation settings from setting Group *m* to setting Group *n* with the **COP *m n*** command. Available setting group numbers are 1 and 2. After entering settings into one setting group with the **SET** and **SET L** commands, copy them to the other groups with the **COP** command. Use the **SET** and **SET L** commands to modify the copied settings. The ALARM output pulses if you copy settings into the active group.

For example, to copy settings from Group 1 to Group 2 issue the following command:

```
=>>COP 1 2 <Enter>
Copy 1 to 2
Are you sure (Y/N) ? Y <Enter>

Please wait...
Settings copied
=>>
```

HIS C Command (Clear Event Summaries/History)

HIS C clears the event summaries and all corresponding event reports from nonvolatile memory.

PRO R

Reset the generator operating profile data using the **PRO R** command. The relay permits you to reset individually the various operating profile data accumulators.

PAS Command (View/Change Passwords)

PAS allows you to inspect or change existing passwords. The factory default passwords for Access Levels 1, B, and 2 are:

Access Level	Factory Default Password
1	OTTER
B	EDITH
2	TAIL

To inspect passwords, type:

```
=>>PAS <Enter>
1:OTTER
B:EDITH
2:TAIL
=>>
```

WARNING

This device is shipped with default passwords. Default passwords should be changed to private passwords at installation. Failure to change each default password to a private password may allow unauthorized access. SEL shall not be responsible for any damage resulting from unauthorized access.

To change the password for Access Level 1 to Ot3579, enter the following:

```
=>>PAS 1 Ot3579 <Enter>
Set
=>>
```

Similarly, **PAS B** and **PAS 2** can be used to change the Level B and Level 2 passwords, respectively.

Passwords may include up to six characters. Valid characters consist of: 'A–Z', 'a–z', '0–9', '-', and '.'. Upper- and lowercase letters are treated as different characters.

Strong passwords consist of six characters, with at least one special character or digit and mixed case sensitivity, but do not form a name, date, acronym, or word. Passwords formed in this manner are less susceptible to password guessing and automated attacks. Examples of valid, distinct strong passwords include:

```
Ot3579      A24.68      Ih2dcs      4u-Iwg      .351r.
```

After entering new passwords, type **PAS <Enter>** to inspect them. Make sure they are what you intended, and record the new passwords. If the passwords are lost or you wish to operate the relay without password protection, put the main board Password jumper in place (Password jumper = ON). Refer to Table 5.6 for Password jumper information.

If you wish to disable password protection for a specific access level [even if Password jumper is not in place (Password jumper = OFF)], simply set the password to DISABLE. For example **PAS 1 DISABLE** disables password protection for Level 1.

SET Command (Change Settings)

The **SET** command allows the user to view or change the relay settings (see Table 6.1 in ***Section 6: Enter Relay Settings***).

STA C

To reset the self-test statuses, use the **STA C** command from Access Level 2:

=>>**STA C <Enter>**

The relay responds:

```
Reboot the relay and clear status
Are you sure (Y/N) ?
```

If you select “N” or “n”, the relay displays:

```
Canceled
```

and aborts the command.

If you select “Y”, the relay displays:

```
Rebooting the relay
```

The relay then restarts (just like powering down, then powering up relay), and all diagnostics are rerun before the relay is enabled.

SYN R (Models 0300G2, 0300G3)

The **SYN R** command allows the operator to reset the synchronization function breaker’s average close time and close counter. Use the **SYN R** command from Access Level 2.

SERIAL PORT ERROR MESSAGES

The relay will generate error messages in response to serial port commands or arguments that it does not recognize. The following table lists the error messages and their causes and suggests corrections.

Table 10.9: SEL-300G Error Messages

Error Message	Command Executed	This Message Occurs When:	To Correct:
Aborted. No Breaker Jumper	**CLOSE, OPEN, PULSE**	Breaker jumper on main board is not installed.	Install main board jumper JMP6-B before executing breaker control commands.
Command Aborted, Relay Disabled	Any Command	The relay is disabled.	Check ALARM contact, **STATUS** command to determine if and why relay is disabled.
Did not trigger	**TRIGGER**	Another event is in progress.	Wait a moment for event in progress to complete and save, then try again.
Did not trigger	**TRIGGER**	The event buffer is full.	Wait a moment for the event in progress to complete and save, then try again.
Did not trigger	**TRIGGER**	The relay is disabled.	Check ALARM Contact, **STATUS** command to determine if and why relay is disabled.
Invalid Access Level	Any Command	Serial port is not at the proper access level to execute the command.	Move to the correct Access Level using the **ACC**, **BAC**, and **2AC** commands and associated passwords.
Invalid Command	Any Command	Command was not recognized by the relay.	Use the **HELP** command to find the commands available at the present Access Level.

Error Message	Command Executed	This Message Occurs When:	To Correct:
Invalid Command	**COPY**	Copy source or destination is unknown.	Use **COPY 1 2** to copy from Group 1 settings to Group 2 or **COPY 2 1** to copy from Group 2 settings to Group 1.
Invalid Command	**GROUP '*n*'**	Relay setting group '*n*' is not a valid group.	Use **GROUP 1** or **GROUP 2**.
Invalid Command	**SET '*n*'** **SHO '*n*'**	Relay setting name '*n*' was not recognized as a valid setting name.	Use the Settings Sheets in ***Section 6: Enter Relay Settings*** to determine the correct name of the desired setting.
Invalid Data	**SYN**	No synch-check report data available.	Execute the command again after a generator paralleling operation when data will be available.
Invalid Date	**DATE**	Date entered is not in a valid format.	Use the **HELP DAT** command to view acceptable formats and then key the command using an acceptable date and format.
Invalid Event	**EVE *n***	Fewer than '*n*' event reports presently are stored.	Use the **HISTORY** command to learn how many events are presently stored.
Invalid Password	**ACC, BAC, 2AC**	Password entered is incorrect for the attempted Access Level.	Rekey command to correct typographical error, or obtain correct password.
Invalid Target	**TARGET '*n*'**	Relay Word Bit name '*n*' was not recognized as a valid name.	Use the tables in ***Section 4: SELOGIC Control Equations*** to determine the correct name of the desired Relay Word bit.
Invalid Time	**TIME**	Time entered is not in a valid format.	Use the **HELP TIM** command to view acceptable formats and then rekey the command.
IRIG-B DATA ERROR	**IRIG**	Demodulated IRIG-B signal is not connected or detected by relay.	Verify cabling and connections, then retry the command.
No group change (see manual)	**GROUP**	SS1 or SS2 asserted during group change. SS1 and SS2 control equations have precedence over serial port command group selection.	Verify that SS1 or SS2 should be asserted at this time, based on your application.
No SER Data	**SER**	The SER data buffer is empty.	Execute the **SER** command again after one or more SER triggering transitions have occurred.
Requested option not ordered in this relay	**EVE DIF**	The relay is not equipped with current differential elements and so does not create this type of event report.	
Synch-check option not ordered in this relay	**SYN**	Relay is not equipped with synch-check elements and so does not create this type of event report.	

SEL-300G Relay Command Summary

Access Level 0 Commands	The only significant thing that can be done at Access level 0 is to go to Access Level 1 or use the **HELP** command. The screen prompt is: =
ACC	Enter Access Level 1. If the main board password jumper is not in place, the relay prompts for the entry of the Access Level 1 password in order to enter Access Level 1.
CAS	Compressed ASCII configuration data.
HELP	Get command help. Use alone to learn commands available at this access level. Use with a command name (such as **HELP DAT**), to get more information about the command.
Access Level 1 Commands	The Access Level 1 commands primarily allow the user to look at information (e.g., settings, metering), not change it. The screen prompt is: =>
2AC	Enter Access Level 2. If the main board password jumper is not in place, the relay prompts for the entry of the Access Level 2 password in order to enter Access Level 2.
BAC	Enter Breaker Access Level (Access Level B). If the main board password jumper is not in place, the relay prompts for the entry of the Access Level B password.
BRE	Display breaker monitor data (trips, interrupted current, wear).
CEV *n*	Show compressed event report number n with 1/4-cycle resolution. You can use parameters Ly, SEC, Sx, R, C, and DIF with CEV similar to **EVE** commands described later. Use **CEV** commands to save event reports for SEL-5601 Analytic Assistant.
CHIS	Show compressed history.
CST	Show compressed status report.
DAT	Show date.
DAT m/d/y	Enter date in this manner if Date Format setting DATE_F = MDY.
DAT y/m/d	Enter date in this manner if Date Format setting DATE_F = YMD.
EVE *n*	Show event report number *n* with 1/4-cycle resolution.
EVE A *n*	Show the analog data for event report number *n*.
EVE C *n*	Show 15-cycle event report number *n* with 1/16-cycle resolution.
EVE D *n*	Show the digital data for event report number *n*.
EVE DIF	Show differential format event report.
EVE GND	Show special report for Stator Ground element 64G. This report shows RMS secondary magnitudes of third-harmonic neutral, third-harmonic terminal, and fundamental neutral voltages with 1/4-cycle resolution. It also includes status of related elements.
EVE L*y* *n*	Show *y* cycles of event report number *n*.
EVE R *n*	Show unfiltered event report number *n*, displaying 16 samples per cycle.
EVE SEC *n*	Show event report number *n* with sampled values in secondary amperes and volts instead of primary amperes and kV.
EVE S*x* *n*	Show event report number *n*, displaying *x* samples per cycle (*x* = 4 or 16).
GRO	Display active group number.

Access Level 1 Commands (continued)	The Access Level 1 commands primarily allow the user to look at information (e.g., settings, metering), not change it. The screen prompt is: =>
HIS *n*	Show a brief summary of the *n* latest event reports.
IRI	Force synchronization attempt of internal relay clock to IRIG-B time-code input.
MET *k*	Display instantaneous metering data. Enter *k* for repeat count.
MET D	Display demand and peak demand data. Select **MET RD** or **MET RP** to reset.
MET DIF	Display differential meter data.
MET E	Display energy metering data. Select **MET RE** to reset.
MET M	Display maximum/minimum metering data. Select **MET RM** to reset.
MET RD	Reset demand ammeter.
MET RE	Reset energy metering.
MET RM	Reset max/min metering.
MET RP	Reset peak demand ammeter.
MET T	Show thermal meter data.
PRO	Display generator operating profile.
QUI	Return to Access Level 0. Terminate Distributed Port Switch Protocol connection.
SER *m n*	Show rows *m* through *n* in the Sequential Events Recorder (SER) event report.
SER *n*	Show the latest *n* rows in the Sequential Events Recorder (SER) event report.
SER d1	Show rows in the Sequential Events Recorder (SER) event report from date d1.
SER d1 d2	Show rows in the Sequential Events Recorder (SER) event report from date d1 to d2. Entry of dates is dependent on the Date Format setting DATE_F (= MDY or YMD).
SHO *n*	Show relay element and logic settings for Group *n*.
SHO G	Show global settings.
SHO P *n*	Show Port *n* settings.
SHO R	Show Sequential Events Recorder (SER) settings.
STA	Show relay self-test status.
SYN *n*	View Synch-Check report *n* (Models 0300G2 and 0300G3)
TAR R	Reset the front-panel tripping targets.
TAR *n k*	Display Relay Word row. If *n* = 0 through 44, display row n. If *n* is an element name (e.g., 50P1) display the row containing element *n*. Enter *k* for repeat count.
TIM	Show or set time (24-hour time). Show time presently in the relay by entering just **TIM**. Example time 22:47:36 is entered with command **TIM 22:47:36**.
TRI	Trigger an event report.

SEL-300G Relay Command Summary

Access Level B Commands	Access Level B commands primarily allow the user to operate relay parameters and output contacts. You can execute all Access Level 1 commands from Access Level B. The screen prompt is: = =>
CLO	Assert the CLOSE Relay Word bit. If CLOSE is assigned to an output contact, the output contact asserts if command **CLO** is executed and the circuit breaker is open.
GRO *n*	Change active group to group *n*.
OPE *n*	Assert the TRIP*n* Relay Word bit. If TRIP*n* is assigned to an output contact (e.g., OUT101 = TRIP1), the output contact asserts if command **OPE 1** is executed.
PUL *n k*	Pulse output contact *n* (ALARM, OUT101–OUT107, OUT201-OUT212) for *k* (1–30) seconds. Parameter *n* must be specified; *k* defaults to 1 if not specified.
Access Level 2 Commands	The Access Level 2 commands allow unlimited access to relay settings, parameters, and output contacts. All Access Level 1 and Access Level B commands are available from Access Level 2. The screen prompt is: =>>
BRE *n*	Enter **BRE W** to preload breaker wear. Enter **BRE R** to reset breaker monitor data.
CON *n*	Control Relay Word bit RB*n* (Remote Bit *n*; *n* = 1 through 8). Execute **CON *n*** and the relay responds: CONTROL RB*n*. Then reply with one of the following: **SRB *n*** set Remote Bit *n* (assert RB*n*). **CRB *n*** clear Remote Bit *n* (deassert RB*n*). **PRB *n*** pulse Remote Bit *n* (assert RB*n* for 1/4 cycle).
COP *m n*	Copy relay and logic settings from group *m* to group *n*.
HIS C	Clear the brief summary and corresponding event reports.
PAS	Show existing Access Level 1, B, and 2 passwords.
PAS 1 xxxxxx	Change Access Level 1 password to xxxxxx.
PAS B xxxxxx	Change Access Level B password to xxxxxx.
PAS 2 xxxxxx	Change Access Level 2 password to xxxxxx.
PRO R	Reset generator operating profile.
SET *n*	Change relay and logic settings for group *n*.
SET G	Change global settings.
SET P *n*	Change Port *n* settings.
SET R	Change Sequential Events Recorder (SER) settings.
STA C	Reset self-test warnings/failures, clear data buffers and restart relay.
SYN R	Reset Synch-Check function breaker close time average.

TABLE OF CONTENTS

SECTION 11: EVENT REPORTS AND SER FUNCTIONS 11-1

Introduction 11-1
Standard Event Reports 11-1
Event Report Length (Settings LER and PRE) 11-1
Standard Event Report Triggering 11-2
Standard Event Report Summary 11-3
Retrieving Full-Length Standard Event Reports 11-4
Compressed ASCII Event Reports 11-6
Filtered and Unfiltered Event Reports 11-6
Clearing Standard Event Report Buffer 11-6
Standard Event Report Column Definitions 11-6
Differential Event Report Column Definitions (Models 0300G1 and 0300G3) 11-15
Sequential Events Recorder (SER) Report 11-17
SER Triggering 11-17
Making SER Trigger Settings 11-18
Retrieving SER Reports 11-18
Clearing SER Report 11-19
Synchronism Checking Report (Models 0300G2, 0300G3) 11-19
SYN Report Triggering 11-20
Conditions When CLOSE Asserted 11-20
SYN Report Closure 11-21
Use the Breaker Close Time Average 11-21
Reset the Breaker Close Time Average 11-21
Example Standard 15-Cycle Event Report 11-21
Example Sequential Events Recorder (SER) Report 11-30
Differential Event Report Headers 11-31

TABLES

Table 11.1: Event Types 11-4
Table 11.2: Standard Event Report Current, Voltage, and Frequency Columns 11-7
Table 11.3: Output, Input, and Protection and Control Element Event Report Columns 11-8
Table 11.4: Differential Event Report Current Columns 11-16
Table 11.5: Differential Element, Output, and Input Event Report Columns 11-16

FIGURES

Figure 11.1: Example Event Summary 11-3
Figure 11.2: Example Standard 15-Cycle Event Report 1/4-Cycle Resolution 11-26
Figure 11.3: Example EVE GND command Report 11-27
Figure 11.4: Derivation of Event Report Current Values and RMS Current Values From Sampled Current Waveform 11-28
Figure 11.5: Derivation of Phasor RMS Current Values From Event Report Current Values 11-29
Figure 11.6: Example Sequential Events Recorder (SER) Event Report 11-30
Figure 11.7: Example Differential Event Report 1/4-Cycle Resolution 11-32

SECTION 11: EVENT REPORTS AND SER FUNCTIONS

INTRODUCTION

The SEL-300G Relay offers two styles of event reports:

- Standard 15-, 30-, 60-, 180-cycle event reports
- Sequential Events Recorder (SER) report

Resolution: 1 ms

Accuracy: +1/4 cycle

These event reports contain date, time, current, voltage, frequency, relay element, optoisolated input, and output contact information. Event reports generated by SEL-300G_1 Relays also include data describing the operation of the differential measurements and elements.

The relay generates (triggers) standard 15-, 30-, 60-, or 180-cycle event reports by fixed and programmable conditions. These reports show information for 15, 30, 60, or 180 continuous cycles. The relay stores the event report data in nonvolatile memory. Up to twenty-nine 15-cycle, fifteen 30-cycle, eight 60-cycle, or two 180-cycle reports are maintained; if more reports are triggered, the latest event report overwrites the oldest event report. See Figure 11.2 for an example standard 15-cycle event report.

The relay adds lines in the SER report for a change of state of a programmable condition. The SER lists date and time-stamped lines of information each time a programmed condition changes state. The relay stores the latest 512 lines of the SER report in nonvolatile memory. If the report fills up, newer rows overwrite the oldest rows in the report. See Figure 11.6 for an example SER report.

Relays equipped with synchronism checking also generate reports showing relay and breaker performance during synch-check supervised closes.

STANDARD EVENT REPORTS

See Figure 11.2 for an example event report (**Note**: Figure 11.2 is on multiple pages).

Event Report Length (Settings LER and PRE)

The SEL-300G provides user-programmable event report length and prefault length. Event report length is 15, 30, 60, or 180 cycles. Prefault length ranges from 1 to LER-1 cycles. Prefault length is the first part of the event report that precedes the event report triggering point.

Set the event report length with the LER setting. Set the prefault length with the PRE setting.

Changing the LER setting will erase all events stored in nonvolatile memory. Changing the PRE setting has no effect on the nonvolatile reports.

Standard Event Report Triggering

The relay triggers (generates) a standard event report when any of the following occur:

- Relay Word bit TRIP1 through TRIP4 assert
- Programmable SELOGIC® control equation setting ER asserts to logical 1
- TRI (Trigger Event Reports) serial port command executed
- Output contacts OUT101 through OUT107 (All models) pulsed via the serial port or front-panel **PUL** (Pulse Output Contact) command

Relay Word Bit TRIP1 through TRIP4

Refer to Figure 4.6. If any of Relay Word bits TRIP1 through TRIP4 assert to logical 1, an event report is automatically generated. Thus, any condition that causes a trip does **not** have to be entered in SELOGIC control equation setting ER.

Relay Word bits TRIP1 through TRIP4 (in Figure 4.6) are usually assigned to output contacts for tripping circuit breakers, etc.

Programmable SELOGIC Control Equation Setting ER

The programmable SELOGIC control equation event report trigger setting ER is set to trigger standard event reports for conditions other than trip conditions. When setting ER sees a logical 0 to logical 1 transition, it generates an event report (if the SEL-300G is not already generating a report that encompasses the new transition). The factory setting is:

ER = /24C2 + /32P1 + /46Q2 + /51N + /51C + /51V + /64G1 + /64G2
+ /60LOP + /81D1 + /81D2 + \81D1 + \81D2 + /BNDA + /BNDT + /INAD

Note the rising edge operator, /, in front of some of these elements. Rising edge operators are especially useful in generating an event report at fault inception and then generating another later if a breaker failure condition occurs. For example, at the inception of a stator ground fault, pickup indicator 64G1 asserts and an event report is generated:

ER = ... + /64G1 + ... = logical 1 (for one processing interval)

Even though the 64G1 pickup indicator will remain asserted for the duration of the ground fault, the rising edge operator, /, in front of 64G1 (/64G1) causes setting ER to be asserted for only one processing interval.

Falling edge operators, \, are also used to generate event reports as in the case of …\81D1 + \81D2 +... See ***Section 4: SELOGIC Control Equations*** for more information on falling edge operators.

TRI (Trigger Event Report) and PUL (Pulse Output Contact) Commands

The sole function of the **TRI** serial port command is to generate standard event reports, primarily for testing purposes.

The **PUL** command asserts the output contacts for testing purposes or for remote control. If output contact OUT101 through OUT107 (all models) asserts via the **PUL** command, the relay triggers a standard event report. The **PUL** command to OUT 201 through OUT 212 does not trigger an event report. The **PUL** command is available at the serial port and the relay front-panel CNTRL pushbutton.

See ***Section 10: Serial Port Communications and Commands*** and ***Section 9: Front-Panel Operation*** (Figure 9.3) for more information on the **TRI** (Trigger Event Report) and **PUL** (Pulse Output Contact) commands.

Standard Event Report Summary

Each time the relay generates a standard event report, it also generates a corresponding event summary (see Figure 11.1). Event summaries contain the following information:

- Relay and terminal identifiers (settings RID and TID)
- Date and time when the event was triggered
- Event type
- System frequency at the time the event was triggered
- Front-panel targets at the time of trip
- Phase (IA, IB, IC), neutral (IN), calculated residual ($I_G = 3I_0$), and negative-sequence ($I_Q = 3I_2$) currents

The relay includes the event summary in the standard event report. The identifiers, date, and time appear at the top of the standard event report, and the other information follows. See Figure 11.2.

The example event summary in Figure 11.1 corresponds to the full-length standard 15-cycle event report in Figure 11.2 (**Note**: Figure 11.2 is on multiple pages).

```
GENERATOR                          Date: 01/30/00    Time: 10:20:24.811
TERMINAL

Event: TRIP  Frequency:  60.16
Targets: 50 N 27/59
Currents (A Pri), ABCNGQ:      1470     424     1342     183     1872     76
```

Figure 11.1: Example Event Summary

The relay sends event summaries to all serial ports with setting AUTO = Y each time an event triggers.

The latest twenty-nine 15-cycle, fifteen 30-cycle, eight 60-cycle, two 180-cycle event summaries are stored in nonvolatile memory and are accessed by the **HIS** (Event Summaries/History) command. See ***Section 10: Serial Port Communications and Commands*** for more detail.

Event Type

The "Event:" field shows the event type. The possible event types and their descriptions are shown in the table below. Note the correspondence to the preceding event report triggering conditions (see ***Standard Event Report Triggering*** in this section).

Table 11.1: Event Types

Event Type	Description
TRIP	Assertion of Relay Word bits TRIP1 through TRIP4
ER	SELOGIC control equation setting ER
TRIG	Execution of **TRIGGER** command
PULSE	Execution of **PULSE** command

Targets

The relay reports the targets at the rising edge of TRIP1, TRIP2, TRIP3, or TRIP4. If there is no rising edge of TRIP in the report, the Targets field is blank. See ***Front-Panel Target LEDs*** in ***Section 9: Front-Panel Operation***.

Currents

The "Currents (A pri), ABCNGQ:" field shows the currents present in the event report row containing the maximum phase current. The listed currents are:

Phase (A = channel IA, B = channel IB, C = channel IC)

Neutral (N = channel IN)

Calculated residual ($I_G = 3I_0$; calculated from channels IA, IB, and IC)

Negative-sequence ($Q = 3I_2$; calculated from channels IA, IB, and IC)

Retrieving Full-Length Standard Event Reports

The latest event reports are stored in nonvolatile memory. Each event report includes four sections:

- Current, voltage, station battery, frequency, contact outputs, optoisolated inputs
- Protection and control elements (different for various relay models)
- Event summary
- Group and global settings

Use the **EVE** command to retrieve the reports. There are several options to customize the report format. The general command format is:

EVE [*n* DIF Sx SEC Ly[-[w]] R A D C GND]

where:

n Event number (1–29) if LER = 15, (1–15) if LER = 30, (1–8) if LER = 60, or (1–2) if LER = 180. Defaults to 1 if not listed, where 1 is the most recent event.

DIF Display differential element event report.

Sx Display x samples per cycle (4 or 16); defaults to 4 if not listed.

SEC Displays sampled values in secondary amperes and volts instead of primary amperes and kV.

Ly	Display y cycles of data (1–LER). Defaults to LER value if not listed. Unfiltered reports (R parameter) display an extra cycle of data.
Ly-	Display event data from cycle y to the end of the report.
Ly-w	Display event data from cycle y to cycle w.
R	Specifies the unfiltered (raw) event report. Defaults to 16 samples per cycle unless overridden with the Sx parameter.
A	Specifies that only the analog section of the event is displayed (current, voltage, station battery, frequency, contact outputs, optoisolated inputs).
D	Specifies that only the digital section (Protection and Control Elements) of the event is displayed.
C	Displays a 15-cycle report with 1/16-cycle resolution and primary scaling. This report includes analog, digital, and settings information. You must use **CEVENT** command when a Compressed Event report is desired (see ***Appendix E: Compressed ASCII Commands*** for detail).
GND	Specifies a special report for Stator Ground element 64G. This report shows rms secondary magnitudes of third-harmonic neutral, third-harmonic terminal, and fundamental neutral voltages at quarter-cycle intervals. It also includes status of related elements. See Figure 11.3 for a typical EVE GND report.

Below are example **EVE** commands.

Serial Port Command	**Description**
EVE	Display the most recent event report at 1/4-cycle resolution.
EVE 2	Display the second event report at 1/4-cycle resolution.
EVE SEC	Display the most recent event report at 1/4-cycle resolution with sampled values in secondary.
EVE GND	Display the most recent event report in a ground format showing rms secondary magnitudes (of select voltages) instead of sampled primary values.
EVE S16 L10	Display 10 cycles of the most recent report at 1/16-cycle resolution.
EVE C 2	Display 15 cycles of the second event report at 1/16-cycle resolution.
EVE R	Display most recent report at 1/16-cycle resolution; analog data are unfiltered (raw).
EVE 2 D L10	Display 10 cycles of the protection and control elements section of the second event report at 1/4-cycle resolution.
EVE 2 A R S4	Display the unfiltered analog section of the second event report at 1/4-cycle resolution.

If an event report is requested that does not exist, the relay responds:

"Invalid Event"

Compressed ASCII Event Reports

The SEL-300G provides Compressed ASCII event reports to facilitate event report storage and display. It also includes additional information (e.g., status of all Relay Word Bits) not available in the reports retrieved using the **EVE** command. The SEL-2032, SEL-2030, and SEL-2020 Communications Processors and the SEL-5601 Analytic Assistant software take advantage of the Compressed ASCII format. Use the **CEVENT** command to display Compressed ASCII event reports. See the **CEVENT** command discussion in ***Appendix E: Compressed ASCII Commands*** for further information.

Filtered and Unfiltered Event Reports

The SEL-300G samples the basic power system measurands (ac voltage, ac current, station battery, and optoisolated inputs) 16 times per power system cycle. The relay filters the measurands to remove transient signals. The relay operates on the filtered values and reports them in the event report.

To view the raw inputs to the relay, select the unfiltered event report (e.g., **EVE R**). Use the unfiltered event reports to observe:

- Power system harmonics on channels IA, IB, IC, IN, VA, VB, VC, VN
- Decaying dc offset during fault conditions on IA, IB, IC
- Optoisolated input contact bounce on IN101 through IN106
- Transients on the station dc battery channel Vdc (power input terminals Z25 and Z26)

The filters for ac current, voltage, and station battery are fixed. You can adjust the optoisolated input debounce via debounce settings (see Figures 3.12 and 3.13 in ***Section 3: Auxiliary Function Settings***).

Raw event reports display one extra cycle of data at the beginning of the report.

Clearing Standard Event Report Buffer

The **HIS C** command clears the event summaries and corresponding standard event reports from nonvolatile memory. See ***Section 10: Serial Port Communications and Commands*** for more information on the **HIS** (Event Summaries/History) command.

Standard Event Report Column Definitions

Refer to the example event report (Figure 11.2) to view event report columns (**Note**: Figure 11.2 is on multiple pages). This example event report displays rows of information each 1/4 cycle and was retrieved with the **EVE** command.

The columns contain ac current, ac voltage, station dc battery voltage, frequency, output, input, and protection and control element information.

Current, Voltage, and Frequency Columns

Table 11.2 summarizes the event report current, voltage, and frequency columns.

Table 11.2: Standard Event Report Current, Voltage, and Frequency Columns

Column Heading	Definition
IA	Current measured by channel IA (primary A)
IB	Current measured by channel IB (primary A)
IC	Current measured by channel IC (primary A)
IN	Current measured by channel IN (primary A)
IG	Calculated residual current IG = $3I_0$ = IA + IB + IC (primary A)
VA or VAB	Voltage measured by channel VA or VAB (primary kV)
VB or VBC	Voltage measured by channel VB or VBC (primary kV)
VC or VCA	Voltage measured by channel VC or calculated from VAB and VBC (primary kV)
VN	Voltage measured by channel VN (primary kV)
VS	Voltage measured by channel VS (primary kV)
Vdc	Voltage measured at power input terminals Z25 and Z26 (Vdc)
Freq	Frequency of channel VA (Hz)

Note that the ac values change from plus to minus (-) values in Figure 11.2, indicating the sinusoidal nature of the waveforms.

Other figures help in understanding the information available in the event report current columns:

Figure 11.4 shows how event report current column data relates to the actual sampled current waveform and rms current values.

Figure 11.5 shows how event report current column data can be converted to phasor rms current values.

Output, Input, Protection and Control Columns

Table 11.3 summarizes the event report output, input, protection and control columns. Not all relays include all the element types. See Tables 4.6 and 4.8 in ***Section 4: SELOGIC Control Equations*** for more information on Relay Word bits shown in Table 11.3.

Note: The event report does not show the output contacts or optoisolated inputs for the extra I/O board on model 0300G_1.

Table 11.3: Output, Input, and Protection and Control Element Event Report Columns

Column Heading	Corresponding Elements (Relay Word Bits)	Symbol	Definition
All columns		.	Element/input/output not picked up or not asserted, unless otherwise stated.
Out 12	OUT101, OUT102	1	Output contact OUT101 asserted.
		2	Output contact OUT102 asserted.
		b	Both OUT101 and OUT102 asserted.
Out 34	OUT103, OUT104	3	Output contact OUT103 asserted.
		4	Output contact OUT104 asserted.
		b	Both OUT103 and OUT104 asserted.
Out 56	OUT105, OUT106	5	Output contact OUT105 asserted.
		6	Output contact OUT106 asserted.
		b	Both OUT105 and OUT106 asserted.
Out 7A	OUT107, ALARM	7	Output contact OUT107 asserted.
		A	Output contact ALARM asserted.
		b	Both OUT107 and ALARM asserted.
In 12	IN101, IN102	1	Optoisolated input IN101 asserted.
		2	Optoisolated input IN102 asserted.
		b	Both IN101 and IN102 asserted.
In 34	IN103, IN104	3	Optoisolated input IN103 asserted.
		4	Optoisolated input IN104 asserted.
		b	Both IN103 and IN104 asserted.
In 56	IN105, IN106	5	Optoisolated input IN105 asserted.
		6	Optoisolated input IN106 asserted.
		b	Both IN105 and IN106 asserted.
21Z1	21P1P, 21P1T	m	21P1P element picked up.
		M	21P1P element picked up; timer expired; timer output 21P1T asserted.
	21C1P, 21C1T	c	21C1P element picked up.
		C	21C1P element picked up; timer expired; timer output 21C1T asserted.
21Z2	21P2P, 21P2T	m	21P2P element picked up.
		M	21P2P element picked up; timer expired; timer output 21P2T asserted.
	21C2P, 21C2T	c	21C2P element picked up.
		C	21C2P element picked up; timer expired; timer output 21C2T asserted.

Column Heading	Corresponding Elements (Relay Word Bits)	Symbol	Definition
24C2	24C2, 24C2T, 24C2R	2	24C2 element picked up and timing.
		C	24C2 element timed out.
		r	24C2 element fully reset.
24D1	24D1, 24D1T	1	24D1 element picked up.
		D	24D1 element picked up; timer timed out on pickup time; timer output 24D1T asserted.
25SF	SF	*	25SLO setting < Slip Frequency < 25SHI setting.
25A	25A1, 25A2, 25C	1	Compensated phase angle magnitude < 25ANG1 setting.
		2	Uncompensated phase angle magnitude < 25ANG2 setting.
		b	Both 25A1 and 25A2 are picked up.
		C	25C picked up.
GENV	GENVHI, GENVLO	+	GENVHI picked up, indicating generator voltage is higher than system voltage.
		-	GENVLO picked up, indicating generator voltage is lower than system voltage.
GENF	GENFHI, GENFLO	+	GENFHI picked up, indicating slip frequency greater than 25SHI setting.
		-	GENFLO picked up, indicating slip frequency less than 25SLO setting.
27PV	27P1, 27P2, 27V1	1	Level 1 (27P1) instantaneous phase undervoltage element picked up.
		2	Level 2 (27P2) instantaneous phase undervoltage element picked up.
		b	Both Level 1 and Level 2 phase undervoltage elements picked up.
		V	27V1 positive-sequence undervoltage element picked up.
		B	27V1 and 27P1 picked up.
		P	27V1 and 27P2 picked up.
		3	27P1, 27P2, and 27V1 picked up.
27PP	27PP1, 27PP2	1	Level 1 phase-to-phase undervoltage element picked up.
		2	Level 2 phase-to-phase undervoltage element picked up.
		b	Both Level 1 and Level 2 phase-to-phase undervoltage elements picked up.

Column Heading	Corresponding Elements (Relay Word Bits)	Symbol	Definition
27VS	27VS	S	Synch-check (VS) input undervoltage element picked up.
32P1	32P1, 32P1T	1	Level 1 reverse/low-forward power instantaneous element picked up.
		P	32P1 picked up, 32P1T timed out.
32P2	32P2, 32P2T	2	Level 2 reverse/low-forward power instantaneous element picked up.
		P	32P2 picked up, 32P2T timed out.
40Z1	40Z1, 40Z1T	1	Zone 1 loss-of-field element picked up.
		Z	40Z1 picked up, 40Z1T timed out.
40Z2	40Z2, 40Z2T	2	Zone 2 loss-of-field element picked up.
		Z	40Z2 picked up, 40Z2T timed out.
46Q1	46Q1, 46Q1T	1	Negative-sequence definite-time overcurrent element 46Q1 picked up.
		Q	46Q1 picked up, 46Q1T timed out.
46Q2	46Q2, 46Q2T, 46Q2R	2	Negative-sequence inverse-time overcurrent element 46Q2 picked up.
		Q	46Q2 picked up, 46Q2T timed out.
		r	46Q2 fully reset.
50P	50P1, 50P2	1	Level 1 instantaneous phase overcurrent element picked up.
		2	Level 2 instantaneous phase overcurrent element picked up.
		P	Both Level 1 and Level 2 elements picked up.
50G	50G1, 50G2	1	Level 1 instantaneous residual overcurrent element picked up.
		2	Level 2 instantaneous residual overcurrent element picked up.
		G	Both Level 1 and Level 2 elements picked up.
50N	50N1, 50N2	1	Level 1 instantaneous neutral overcurrent element picked up.
		2	Level 2 instantaneous neutral overcurrent element picked up.
		N	Both Level 1 and Level 2 elements picked up.
50H1	50H1	1	Level 1 instantaneous 87-input phase overcurrent element picked up.
		H	Level 1 87-input phase overcurrent element picked up and time delay expired.

Column Heading	Corresponding Elements (Relay Word Bits)	Symbol	Definition
50H2	50H2A, 50H2B, 50H2C, 50H2T	a	A-Phase Level 2 instantaneous 87-input phase overcurrent element picked up.
		b	B-Phase Level 2 instantaneous 87-input phase overcurrent element picked up.
		c	C-Phase Level 2 instantaneous 87-input phase overcurrent element picked up.
		*	Two or more Level 2 instantaneous 87-input phase overcurrent elements picked up.
		H	Level 2 87-input phase overcurrent element picked up and time delay expired.
50Q	50Q1, 50Q2	1	Level 1 instantaneous 87-input negative-sequence overcurrent element picked up.
		2	Level 2 instantaneous 87-input negative-sequence overcurrent element picked up.
		Q	Both Level 1 and Level 2 elements picked up.
50R	50R1, 50R2	1	Level 1 instantaneous 87-input residential overcurrent element picked up.
		2	Level 2 instantaneous 87-input residual overcurrent element picked up.
		R	Both Level 1 and Level 2 elements picked up.
51G	51G, 51GT, 51GR	g	Residual time-overcurrent element picked up and timing.
		G	Residual time-overcurrent element timed out.
		r	Time-overcurrent element reset.
51N	51N, 51NT, 51NR	n	Neutral time-overcurrent element picked up and timing.
		N	Neutral time-overcurrent element timed out.
		r	Time-overcurrent element reset.
51C	51C, 51CT, 51CR	c	Voltage controlled phase time-overcurrent element picked up and timing.
		C	Voltage controlled phase time-overcurrent element timed out.
		r	Time-overcurrent element reset.

Column Heading	Corresponding Elements (Relay Word Bits)	Symbol	Definition
51V	51V, 51VT, 51VR	v	Voltage restrained time-overcurrent element picked up and timing.
		V	Voltage restrained time-overcurrent element timed out.
		r	Time-overcurrent element reset.
59P	59P1, 59P2	1	Level 1 instantaneous phase overvoltage element picked up.
		2	Level 2 instantaneous phase overvoltage element picked up.
		b	Both Level 1 and Level 2 phase overvoltage elements picked up.
59V1	59V1	V	Positive-sequence instantaneous overvoltage element 59V1 picked up.
59S	59VP, 59VS	V	Generator synch-check voltage window element picked up.
		S	System synch-check (VS) voltage window element picked up.
		b	Both synch-check voltage window elements picked up.
59PP	59PP1, 59PP2	1	Level 1 phase-to-phase instantaneous overvoltage element picked up.
		2	Level 2 phase-to-phase instantaneous overvoltage element picked up.
		b	Both phase-to-phase instantaneous overvoltage elements picked up.
59G	59G1, 59G2	1	Level 1 instantaneous residual overvoltage element picked up.
		2	Level 2 instantaneous residual overvoltage element picked up.
		b	Both Level 1 and Level 2 residual overvoltage elements picked up.
59Q	59Q	Q	Negative-sequence instantaneous overvoltage element 59Q picked up.
60	60LOP	L	Loss-of-potential detected.
64G1	64G1, 64G1T	1	64G1 picked up.
		G	64G1 definite-time delay timed out.
64G2	64G2, 64G2T	2	64G2 picked up.
		G	64G2 definite-time delay timed out.
T64G	T64G	T	Relay Word T64G asserted.
N64G	N64G	N	Relay Word N64G asserted.
78	SWING	S	The Relay Word bit SWING picked up.
	OOS	O	The Relay Word bit OOS picked up.
	OOST	T	The Relay Word bit OOST picked up.

Column Heading	Corresponding Elements (Relay Word Bits)	Symbol	Definition
81	81D1, 81D2, 81D3 81D4, 81D5, 81D6	1	Frequency element 81D1 asserted.
		2	Frequency element 81D2 asserted.
		3	Frequency element 81D3 asserted.
		4	Frequency element 81D4 asserted.
		5	Frequency element 81D5 asserted.
		6	Frequency element 81D6 asserted.
		b	Any two or more frequency elements asserted.
87N1	87N1P, 87N1T	1	Level 1 instantaneous ground differential element picked up.
		T	Level 1 instantaneous ground differential element picked up and time delay expired.
87N2	87N2P, 87N2T	2	Level 2 instantaneous ground differential element picked up.
		T	Level 2 instantaneous ground differential element picked up and time delay expired.
87UR	87R, 87U	R	Restrained current differential 87R picked up.
		U	Unrestrained current differential 87U picked up.
		b	Both 87R and 87U picked up.
87BL	87BL	*	87BL asserted.
VDC	DCHI, DCLO	V	Station battery instantaneous overvoltage element DCHI picked up.
		v	Station battery instantaneous undervoltage element DCLO picked up.
LCL12	LB1, LB2	1	Local bit LB1 asserted.
		2	Local bit LB2 asserted.
		b	Both LB1 and LB2 asserted.
LCL34	LB3, LB4	3	Local bit LB3 asserted.
		4	Local bit LB4 asserted.
		b	Both LB3 and LB4 asserted.
LCL56	LB5, LB6	5	Local bit LB5 asserted.
		6	Local bit LB6 asserted.
		b	Both LB5 and LB6 asserted.
LCL78	LB7, LB8	7	Local bit LB7 asserted.
		8	Local bit LB8 asserted.
		b	Both LB7 and LB8 asserted.

Column Heading	Corresponding Elements (Relay Word Bits)	Symbol	Definition
REM12	RB1, RB2	1	Remote bit RB1 asserted.
		2	Remote bit RB2 asserted.
		b	Both RB1 and RB2 asserted.
REM34	RB3, RB4	3	Remote bit RB3 asserted.
		4	Remote bit RB4 asserted.
		b	Both RB3 and RB4 asserted.
REM56	RB5, RB6	5	Remote bit RB5 asserted.
		6	Remote bit RB6 asserted.
		b	Both RB5 and RB6 asserted.
REM78	RB7, RB8	7	Remote bit RB7 asserted.
		8	Remote bit RB8 asserted.
		b	Both RB7 and RB8 asserted.
LCH12	LT1, LT2	1	Latch bit LT1 asserted.
		2	Latch bit LT2 asserted.
		b	Both LT1 and LT2 asserted.
LCH34	LT3, LT4	3	Latch bit LT3 asserted.
		4	Latch bit LT4 asserted.
		b	Both LT3 and LT4 asserted.
LCH56	LT5, LT6	5	Latch bit LT5 asserted.
		6	Latch bit LT6 asserted.
		b	Both LT5 and LT6 asserted.
LCH78	LT7, LT8	7	Latch bit LT7 asserted.
		8	Latch bit LT8 asserted.
		b	Both LT7 and LT8 asserted.
DEMPQ	PDEM, QDEM	P	Phase demand ammeter element PDEM picked up.
		Q	Negative-sequence demand ammeter element QDEM picked up.
		b	Both PDEM and QDEM picked up.
DEMNG	NDEM, GDEM	N	Neutral ground demand ammeter element NDEM picked up.
		G	Residual ground demand ammeter element GDEM picked up.
		b	Both NDEM and GDEM picked up.
TR12	TR1, TR2	1	Trip bit TRIP1 asserted.
		2	Trip bit TRIP2 asserted.
		b	Both TRIP1 and TRIP2 asserted.
TR34	TR3, TR4	3	Trip bit TRIP3 asserted.
		4	Trip bit TRIP4 asserted.
		b	Both TRIP3 and TRIP4 asserted.

Column Heading	Corresponding Elements (Relay Word Bits)	Symbol	Definition
FRQ	BND1T, BND2T, BND3T, BND4T, BND5T, BND6T	1 2 3 4 5 6 *	Any one 81AC Off-Frequency Accumulator band trip bit asserted. Any two or more 81AC Off-Frequency Accumulator band trip bits asserted.
OC	OC1, OC2, OC3, CC	1 2 3 C	Open Command bit OC1, OC2, or OC3 asserted. Close Command bit CC asserted.
INAD	INAD, INADT	I T	Inadvertent Energization bit INAD asserted. Inadvertent Energization trip bit INADT asserted.
SELOGIC Var *n* (*n* = 1–8)	SV*n*, SV*n*T	*n* T	SELOGIC control equation variable timer input SV_ asserted; timer timing on pickup time; timer output SV_T not asserted. SELOGIC control equation variable timer input SV_ asserted; timer timed out on pickup time; timer output SV_T asserted.

*Output contacts can be a or b type contacts (see Figures 4.16 and 4.17).

Differential Event Report Column Definitions (Models 0300G1 and 0300G3)

Refer to Figure 11.7 to view event report columns. This example event report displays rows of information each 1/4 cycle and was retrieved with the **EVE DIF** command.

The columns contain ac current, differential element, output, input, and operate, restraint, and second-harmonic current magnitude information.

Current Columns

Table 11.4 summarizes the differential event report current columns.

Table 11.4: Differential Event Report Current Columns

Column Heading	Definition
IA	Current measured by channel IA (primary A)
IB	Current measured by channel IB (primary A)
IC	Current measured by channel IC (primary A)
IA87	Current measured by channel IA87 (primary A)
IB87	Current measured by channel IB87 (primary A)
IC87	Current measured by channel IC87 (primary A)

Note that the ac values change from plus to minus (-) values in Figure 11.2, indicating the sinusoidal nature of the waveforms.

Differential Element, Output, and Input Columns

Table 11.5 summarizes the event report differential element, output, and input columns. See Table 4.6 and Table 4.8 in ***Section 4: SELOGIC Control Equations*** for more information on Relay Word bits shown in Table 11.5.

Note: The event report does not show the output contacts or optoisolated inputs for the extra I/O board on model 0300G_1.

Table 11.5: Differential Element, Output, and Input Event Report Columns

Column Heading	Corresponding Elements (Relay Word Bits)	Symbol	Definition
All columns		.	Element/input/output not picked up or not asserted, unless otherwise stated.
Out 12	OUT101, OUT102	1	Output contact OUT101 asserted.
		2	Output contact OUT102 asserted.
		b	Both OUT101 and OUT102 asserted.
Out 34	OUT103, OUT104	3	Output contact OUT103 asserted.
		4	Output contact OUT104 asserted.
		b	Both OUT103 and OUT104 asserted.
Out 56	OUT105, OUT106	5	Output contact OUT105 asserted.
		6	Output contact OUT106 asserted.
		b	Both OUT105 and OUT106 asserted.
Out 7A	OUT107, ALARM	7	Output contact OUT107 asserted.
		A	Output contact ALARM asserted.
		b	Both OUT107 and ALARM asserted.

Column Heading	Corresponding Elements (Relay Word Bits)	Symbol	Definition
In 12	IN101, IN102	1 2 b	Optoisolated input IN101 asserted. Optoisolated input IN102 asserted. Both IN101 and IN102 asserted.
In 34	IN103, IN104	3 4 b	Optoisolated input IN103 asserted. Optoisolated input IN104 asserted. Both IN103 and IN104 asserted.
In 56	IN105, IN106	5 6 b	Optoisolated input IN105 asserted. Optoisolated input IN106 asserted. Both IN105 and IN106 asserted.
87UR	87U, 87R	U R b	87U element picked up. 87R element picked up. Both 87U and 87R elements picked up.
87BL	87BL	*	87BL picked up.

*Output contacts can be "a" or "b" type contacts (see Figures 4.16 and 4.17).

Differential Current Magnitudes and Control Elements

The second section of the differential event report includes columns showing the magnitudes of the individual operate, restraint, and second harmonic currents. These current magnitudes are scaled in multiples of TAP. Because these quantities are magnitudes, no phase angle information can be inferred or calculated, as with the other event report analog data.

Columns for the individual unrestrained elements (87U1, 87U2, 87U3), restrained elements (87R1, 87R2, 87R3), second-harmonic blocking condition and 87B SELOGIC control equation result are also shown, with an * appearing in the column if the element is asserted.

SEQUENTIAL EVENTS RECORDER (SER) REPORT

See Figure 11.6 for an example SER report.

SER Triggering

The relay triggers (generates) an entry in the SER report for a change of state of any one of the elements listed in the SER1, SER2, SER3, and SER4 trigger settings. The factory default settings are:

SER1 = 51NT 50N1T 51CT 51VT 64G1T 64G2T SV3 81D1 81D1T 81D2 81D2T 51N 50N1 51C 51V 64G1 64G2 INAD INADT

SER2 = DP3 LB1 RB1 LT3 TRGTR BCW IN101 IN102 TRIP1 TRIP2 TRIP3 TRIP4 BNDT 24C2T 32P1T 24C2 32P1 SV4 SV2T

SER3 = 24D1 24D1T 46Q1 46Q1T 60LOP BNDA 32P2 32P2T SWING OOS OOST

SER4 = 0

The elements are Relay Word bits referenced in Table 4.6. The relay monitors each element in the SER lists every 1/4 cycle. If an element changes state, the relay time-tags the changes in the SER. For example, setting SER1 contains:

time-overcurrent element pickups (51N and 51C)

instantaneous overcurrent element (50N1)

Thus, any time one of these overcurrent elements picks up or drops out, the relay time-tags the change in the SER.

The relay adds a message to the SER to indicate power up or settings change (to active setting group) conditions:

relay newly powered up or settings changed

Each entry in the SER includes SER row number, date, time, element name or defined alias, and element state.

Making SER Trigger Settings

Enter up to 24 element names in each of the SER settings via the **SET R** command. See Table 4.8 for references to valid relay element (Relay Word bit) names. See the **SET R** command in Table 6.1 and corresponding ***Settings Sheets*** at the end of ***Section 6: Enter Relay Settings***. Use either spaces or commas to delimit the elements.

The relay can monitor up to 96 elements in the SER (24 in each of SER1, SER2, SER3, and SER4).

Retrieving SER Reports

The relay saves the latest 512 rows of the SER in nonvolatile memory. Row 1 is the most recently triggered row and Row 512 is the oldest. View the SER report by date or SER row number as outlined in the examples below. Refer to ***Appendix I*** for Fast SER protocol in the SEL-300G.

Example SER Serial Port Commands	Format
SER	If SER is entered with no numbers following it, all available rows are displayed (up to row number 512). They display with the oldest row at the beginning (top) of the report and the latest row (Row 1) at the end (bottom) of the report. Chronological progression through the report is down the page and in descending row number.
SER 17	If SER is entered with a single number following it (17 in this example), the first 17 rows are displayed, if they exist. They display with the oldest row (Row 17) at the beginning (top) of the report and the latest row (Row 1) at the end (bottom) of the report. Chronological progression through the report is down the page and in descending row number.
SER 10 33	If SER is entered with two numbers following it (10 and 33 in this example; 10 < 33), all the rows between (and including) Rows 10 and 33 are displayed, if they exist. They display with the oldest row (Row 33) at the beginning (top) of the report and the latest row (Row 10) at the end (bottom) of the report. Chronological progression through the report is down the page and in descending row number.

Example SER Serial Port Commands	Format
SER 47 22	If SER is entered with two numbers following it (47 and 22 in this example; 47 > 22), all the rows between (and including) Rows 47 and 22 are displayed, if they exist. They display with the row (Row 22) at the beginning (top) of the report and the oldest row (Row 47) at the end (bottom) of the report. Reverse chronological progression through the report is down the page and in ascending row number.
SER 3/30/97	If SER is entered with one date following it (date 3/30/97 in this example), all the rows on that date are displayed, if they exist. They display with the oldest row at the beginning (top) of the report and the latest row at the end (bottom) of the report, for the given date. Chronological progression through the report is down the page and in descending row number.
SER 2/17/97 3/23/97	If SER is entered with two dates following it (date 2/17/97 chronologically precedes date 3/23/97 in this example), all the rows between (and including) dates 2/17/97 and 3/23/97 are displayed, if they exist. They display with the oldest row (date 2/17/97) at the beginning (top) of the report and the latest row (date 3/23/97) at the end (bottom) of the report. Chronological progression through the report is down the page and in descending row number.
SER 3/16/97 1/5/97	If SER is entered with two dates following it (date 3/16/97 chronologically follows date 1/5/97 in this example), all the rows between (and including) dates 1/5/97 and 3/16/97 are displayed, if they exist. They display with the latest row (date 3/16/97) at the beginning (top) of the report and the oldest row (date 1/5/97) at the end (bottom) of the report. Reverse chronological progression through the report is down the page and in ascending row number.

The date entries in the above example SER commands are dependent on the Date Format setting DATE_F. If setting DATE_F = MDY, then the dates are entered as in the above examples (Month/Day/Year). If setting DATE_F = YMD, then the dates are entered Year/Month/Day.

If the requested SER event report rows do not exist, the relay responds:

No SER Data

Clearing SER Report

Clear the SER report from nonvolatile memory with the **SER C** command as shown in the following example:

```
=>SER C <Enter>
Clear the SER
Are you sure (Y/N) ? Y <Enter>
Clearing Complete
```

SYNCHRONISM CHECKING REPORT (MODELS 0300G2, 0300G3)

SEL-300G Relays equipped with synchronism checking generate a report each time the relay initiates a synch-check supervised generator breaker close. The report contains information about the system and generator at the time the close was performed. The relay stores the three latest reports in nonvolatile relay memory. View the report data using the **SYN *n*** (*n* is the report

number, *n* defaults to 1 which is the latest report) command from Access Level 1, B, or 2. An example of the SYN report is shown below. Note that the relay selects phase for the Generator Voltage based on the SYNCP setting and reports its magnitude after compensating for the 25RCF factor (see VPc in Figure 4.10).

```
=>>SYN <Enter>

GENERATOR                        Date: 06/23/98    Time: 13:35:12.975
TERMINAL

CLOSE*(25C+25A1+25A2) Asserted At:06/23/98 13:08:09.609
Synch Check Conditions when CLOSE Asserted:
Slip Freq.    =   0.12Hz Generator Freq.   =  60.11Hz System Freq.   =  59.99Hz
Voltage Diff. =    1.96% Generator Voltage =  14.05kV System Voltage =  13.78kV
Slip-Compensated Phase Angle Difference =  -1.00 degrees
Uncompensated Phase Angle Difference    =  -9.64 degrees

3PO Deasserted At  : 13:08:09.809
Breaker Close Time : 0.200
Average Breaker Close Time =  0.204
Close Operations           =  6
Last Reset                 =  06/08/98 14:32:13.485

=>>
```

SYN Report Triggering

The relay starts a SYN report when a synch-check supervised generator breaker close is initiated. The relay defines a synch-check supervised close initiation as the rising edge of CLOSE * (25C + 25A1 + 25A2). The relay triggers a SYN report for every synch-check supervised close, regardless of which synch-check outputs (25C, 25A1 or 25A2) you used to supervise CLOSE assertion.

The relay starts the report by recording the time of initiation.

Conditions When CLOSE Asserted

The SYN report shows the generator and system conditions at the time the CLOSE was initiated. Conditions displayed include present slip frequency, actual generator and system frequencies, percent voltage difference, and actual generator and system voltages.

Next, the slip-compensated and uncompensated phase angle differences are shown. The uncompensated phase angle difference is simply the phase angle between the system and generator voltages when CLOSE was inititiated. The relay calculates the slip-compensated phase angle difference using the equation:

$$\text{Slip-Compensated Angle} = \text{Ang(VP)} - \text{Ang(VS)} + (\text{SLIP} \bullet \text{TCLOSD} \bullet 360) - \text{COMPA}$$

where

Ang(VP)	= the generator voltage phase-angle, degrees
Ang(VS)	= the system voltage phase-angle, degrees
SLIP	= Present slip frequency, Hz
TCLOSD	= breaker close time-delay setting, seconds
COMPA	= delta-wye transformer compensation angle setting, degrees

The result of SLIP • TCLOSD • 360°/cycle is the number of degrees that the generator voltage will travel with respect to the system voltage during the time that it takes the breaker to close (TCLOSD), assuming a constant slip frequency equal to SLIP.

When you supervise CLOSE initiation with the 25C Relay Word bit, the relay asserts 25C when the slip-compensated phase angle is approximately equal to the CANGLE setting. Thus, when you review a SYN report from a 25C supervised CLOSE, the slip-compensated angle should closely equal the CANGLE setting. The slip-compensated angle tells us what the relay expects the phase angle to be when the breaker actually closes TCLOSD seconds after CLOSE initiation.

SYN Report Closure

For the vast majority of breaker close operations, the breaker will close and the three-pole-open condition, 3PO, will deassert. If this occurs within about 99 seconds of CLOSE initiation, the relay records the time 3PO deasserted, calculates and displays the breaker close time, advances the close operation counter, and accounts for the new close time in the breaker close time average.

If the breaker does not close and slip is not close to 0 Hz, the generator voltage will rotate away from the system voltage until the phase angle exceeds the close-failure angle, CFANGL, setting. If this occurs within about 99 seconds of CLOSE initiation, the relay reports the message 'Close Failed' in the place of the breaker close time and stores the SYN report.

If 3PO does not deassert and the uncompensated phase angle difference does not exceed the CFANGL setting within about 99 seconds of CLOSE initiation, the relay reports the message 'Close Failed' in the place of the breaker close time and stores the SYN report.

Use the Breaker Close Time Average

You can use the breaker close time average to refine the TCLOSD setting. By setting TCLOSD closer to the actual breaker closing time, the synch-check function performs better to cause a breaker close exactly when the generator voltage phase angle difference equals CANGLE.

Reset the Breaker Close Time Average

Use the Access Level 2 **SYN R** command to reset the Breaker Close Time Average and breaker close operations counter. The relay records the date and time of the last reset for inclusion in the SYN report.

EXAMPLE STANDARD 15-CYCLE EVENT REPORT

The following example standard 15-cycle event report in Figure 11.2 (from a Model 0300G0 Relay) also corresponds to the example Sequential Events Recorder (SER) report in Figure 11.6. The circled numbers in Figure 11.2 correspond to the SER row numbers in Figure 11.6. The row explanations follow Figure 11.6.

In Figure 11.2, the arrow (>) in the column following the **Freq** column identifies the "trigger" row. This is the row that corresponds to the Date and Time values at the top of the event report.

The asterisk (*) in the column following the **Freq** column identifies the row with the maximum phase current. The maximum phase current is calculated from the row identified with the asterisk and the row one quarter-cycle previous (see Figure 11.4 and Figure 11.5). These currents are listed at the end of the event report in the event summary. If the "trigger" row (>) and the maximum phase current row (*) are the same row, the * symbol takes precedence.

```
GENERATOR                          Date: 01/30/00    Time: 10:20:24.811

FID=SEL-300G-X207-V01H425XX4X-Z001001-D20000217   CID=04BO

                                                                    Out  In
      Currents (Amps Pri)            Voltages (kV Pri)              1357 135
   IA    IB    IC    IN    IG    VA    VB    VC    VN   Vdc Freq  246A 246
[1]
  -844   -50   890     0    -4   -6.5  -0.4   6.9   0.0 123 60.01 .... b..
   540 -1004   454    -0   -10    4.2  -7.8   3.5  -0.0 123 60.01 .... b..
   844    44  -890    -0    -2    6.5   0.4  -6.9  -0.0 123 60.01 .... b..
  -540  1002  -458     0     4   -4.2   7.8  -3.5   0.0 123 60.01 .... b..

       [Two cycles of data not shown in this example]
 [4]
  -854   -34   882     0    -6   -6.6  -0.3   6.8   0.0 123 60.01 .... b..
   528 -1002   470    -0    -4    4.1  -7.7   3.7  -0.0 123 60.01 .... b..
   940   124  -770   -61   294    7.3   1.0  -6.0  -0.7 123 60.01 .... b..
  -842   706  -788     4  -924   -6.5   5.5  -6.1   2.2 123 60.01>.... b..
 [5]
  -906  -114   746   181  -274   -7.0  -0.9   5.8   0.6 123 60.01 .... b..
  1160  -408  1108    -7  1860    9.0  -3.2   8.6  -4.5 123 60.01*.... b..
   784     8  -840  -239   -48    6.1   0.1  -6.5   0.1 123 60.01 .... b..
 -1164   402 -1120     6 -1882   -9.0   3.1  -8.7   4.6 123 60.01 .... b..

       [Four and a half cycles of data not shown in this example]

   952   -54  -656  -237   242    7.4  -0.4  -5.1  -0.6 123 60.01 .... b..
 -1016   396 -1238   -33 -1858   -7.9   3.1  -9.6   4.6 123 60.01 .... b..
[11]                                                                  18 17 16 15
  -974    60   628   236  -286   -7.5   0.5   4.9   0.7 123 60.01 bb.. b..
   996  -398  1250    38  1848    7.7  -3.1   9.7  -4.6 123 60.01 bb.. b..
   994   -68  -606  -235   320    7.7  -0.5  -4.7  -0.8 123 60.01 bb.. b..
  -980   394 -1264   -42 -1850   -7.6   3.0  -9.8   4.5 123 60.01 bb.. b..
[12]
 -1014    72   580   235  -362   -7.8   0.6   4.5   0.8 123 60.01 bb.. b..
   960  -394  1270    46  1836    7.5  -3.0   9.9  -4.5 123 60.01 bb.. b..
   620     0  -626  -234    -6    7.9  -0.6  -4.4  -0.9 123 60.01 bb.. b..
  -520   212  -690   -50  -998   -7.3   3.0  -9.9   4.5 123 60.01 bb.. b..

       [Two cycles of data not shown in this example]
 [15]                                                                  13
     0    -0     1   230     0   -8.5   0.8   3.7   1.2 123 60.01 bb.. 2..

    -2    -1    -2    66    -5    6.8  -3.0  10.2  -4.4 123 60.01 bb.. 2..
    -0     0    -1  -230    -1    8.5  -0.9  -3.6  -1.3 123 60.01 bb.. 2..
     1     1     2   -68     4   -6.7   3.0 -10.2   4.4 123 60.01 bb.. 2..

Protection and Control Elements

                                    V L   R    L   D    F I
2 2  2 3 4 4  5  5    5     66 78  8 D C   E    C   E  T RON SELogic
1 4  7 2 0 6  0  1    9     04 81  7 C L   M    H   M  R ECA Variable
ZZDC PPPPZZQQ PGNGNCV PVPGQ  GG 135NN  13571357 1357PN 13Q D
1212 VP121212          1P    12 24612  24682468 2468QG 24    12345678
[1]
...r .......r ....rrr ..... .........V ........ .3.... ..... ........
...r .......r ....rrr ..... .........v ........ .3.... ..... ........
...r .......r ....rrr ..... .........v ........ .3.... ..... ........
...r .......r ....rrr ..... .........v ........ .3.... ..... ........

                                  (continued on next page)
```

See Figure 11.1

Firmware Checksum Identifier

One cycle of data

See Figure 11.3 and 11.4 for details on this example one cycle of Phase A (input IA) current.

```
                                (continued from previous page)

        [Two cycles of data not shown in this example]
[4]
...r .......r ....rrr ..... ........V ........ .3.... ..... ........
...r .......r ....rrr ..... ........V ........ .3.... ..... ........
...r .......r ..1.nrr ..... .1......V ........ .3.... ..... ........
...r .......r ..1.nrr ..... .1......V ........ .3.... ..... ........>
[5]
...r 1......r ..1.nrr ..... .1......V ........ .3.... ..... ........
...r 1......r ..1.nrr ..... .1......V ........ .3.... ..... ........
...r 1......r ..1.nrr ..... .1......V ........ .3.... ..... ........
...r 1......r ..1.nrr ..... .1......V ........ .3.... ..... ........

        [Four and a half cycles of data not shown in this example]

...r 1......r ..1.nrr ..... .1......V ........ .3.... ..... ........
...r 1......r ..1.nrr ..... .1......V ........ .3.... bb... ..T.....
[11]
...r 1......r ..1.nrr ..... .1......V ........ .3.... bb... ..T.....
...r 1......r ..1.nrr ..... .1......V ........ .3.... bb... ..T.....
...r 1......r ..1.nrr ..... .1......V ........ .3.... bb... ..T.....
...r 1......r ..1.nrr ..... .1......V ........ .3.... bb... ..T.....
[12]
...r 1......r ..1.nrr ..... .1......V ........ .3.... bb... ..T.....
...r 1......r ..1.nrr ..... .1......V ........ .3.... bb... ..T.....
...r 1......r ..1.nrr ..... .1......V ........ .3.... bb... ..T.....
...r 1......r ..1.nrr ..... .1......V ........ .3.... bb... ..T.....

        [Two cycles of data not shown in this example]
[15]
...r 1......r ..1.nrr ..... .1......V ........ .3.... bb... ..T.....
...r 1......r ..1.nrr ..... .1......V ........ .3.... bb... ..T.....
...r 1......r ..1.nrr ..... .1......V ........ .3.... bb... ..T.....
...r 1......r ..1.nrr ..... .1......V ........ .3.... bb... ..T.....

Event: TRIG  Frequency:  60.01
Targets:
Currents (A Pri), ABCNGQ:   1471   424  1336   181  1880

Group 1 Settings:

RID     =GENERATOR
TID     =TERMINAL
CTR     = 100       CTRN    = 100       PTR     = 100       PTRN    = 100
VNOM    = 115.0     INOM    = 5.0       EBUP    = D         E24     = Y
E27     = Y         E32     = Y         E40     = Y         E46     = Y
E50     = Y         E51     = Y         E59     = N         E64     = Y
E78     = 1B        E81     = 1         E81AC   = 6         E87N    = Y
ESV     = 6         ESL     = 5         EDEM    = ROL

Z1R     = 8.0       Z1O     = 0.0       MTA1    = 88.0      Z1CMP   = 0
Z1D     = 0.00      Z2R     = 16.0      Z2O     = 0.0       MTA2    = 85.0
Z2CMP   = 0         Z2D     = 0.00      MPF     = 0.80      MXLD    = 1.2
21PTC   =!3PO

24D1P   = 105       24D1D   = 1.00      24CCS   = ID        24IP    = 105
24IC    = 2.0       24ITD   = 0.1       24D2P2  = 176       24D2D2  = 3.00
24CR    = 240.00
24TC    =!60LOP

                                (continued on next page)
```

22 21 20

18 17 16 15 14

See Figure 11.1

(continued from previous page)

```
27P1P   = 54.0      27P2P   = OFF       27V1P   = OFF       27PP1   = 93.5
27PP2   = 93.5


32P1P   =-0.0500    32P1D   = 20.00     32P2P   =-0.1000    32P2D   = 5.00
32PTC   =!60LOP


40Z1P   = 13.4      40XD1   =-2.5       40Z1D   = 0.00      40Z2P   = 25.0
40XD2   =-2.5       40Z2D   = 0.50
40ZTC   =!60LOP


46Q1P   = 8         46Q1D   = 30.00     46Q2P   = 8         46Q2K   = 10
46QTC   =1

50P1P   = OFF       50P2P   = OFF       50N1P   = 2.50      50N1D   = 0.10
50N2P   = OFF       50G1P   = OFF       50G2P   = OFF

51NP    = 0.50      51NC    = U2        51NTD   = 3.00      51NRS   = Y
51NTC   =1
51GP    = OFF
3POD    = 0.00      50LP    = 0.25
52A     =IN101

64G1P   = 5.0       64G1D   = 0.75      64G2P   = 2.5       64RAT   = 1.0
64G2D   = 0.08
64GTC   =1


78FWD   = 8.0       78REV   = 8.0       78R1    = 6.0       78R2    = 6.0
78TD    = 0.00      78TDURD = 3.00      50ABC   = 0.25      OOSTC   =1

27B81P  = 20.00     81D1P   = 59.10     81D1D   = 0.03

UBND1   = 59.5      LBND1   = 58.8      TBND1   = 3000.00
LBND2   = 58.0      TBND2   = 540.00
LBND3   = 57.5      TBND3   = 100.00
LBND4   = 57.0      TBND4   = 14.00
LBND5   = 56.5      TBND5   = 2.40
LBND6   = 40.0      TNBD6   = 1.00
62ACC   = 0.16
ONLINE  =!27B81 * !3PO


87N1P   = 0.50      87N1D   = 0.10      87N2P   = 1.50      87N2D   = 0.00
87NTC   =1

DMTC    = 15        PDEMP   = 5.50      NDEMP   = 1.00      GDEMP   = 1.00
QDEMP   = 2.50
INAD    =SV2T * 50L
INADPU  = 0.25      INADDO  = 0.13
SV1     =27V1 * 40Z2
SV1PU   = 0.25      SV1DO   = 0.00
SV2     =!50L * 27P1 * !IN102
SV2PU   = 2.00      SV2DO   = 1.00
SV3     =51NT + 50N1T + 51CT + 51VT + 64G1T + 64G2T + INADT + LT1
          * 32P2T
SV3PU   = 0.00      SV3DO   = 0.00
SV4     =24C2T + 32P1T + 40Z1T + 40Z2T
SV4PU   = 0.00      SV4DO   = 0.00
```

(continued on next page)

(continued from previous page)

```
SV5     =0
SV5PU   = 0.00      SV5DO   = 0.00
SV6     =0
SV6PU   = 0.00      SV6DO   = 0.00
SET1    =LB1 + RB1
RST1    =3PO
SET2    =INADT
RST2    =TRGTR
SET3    =!(DCLO * DCHI)
RST3    =TRGTR

SET4    =0
RST4    =1
SET5    =SV4
RST5    =TRGTR

TDURD   = 0.16
TR1     =SV3 + SV4 + 46Q2T + 81D1T + 81D2T+OOST
ULTR1   =3PO
TR2     =SV3 + SV4
ULTR2   =!TR2
TR3     =SV3 + LT1
ULTR3   =!TR3
TR4     =SV3
ULTR4   =!TR4
CLEN    =1
CL      =0
ULCL    =1
CLSD    = 0.00
ER      =/24C2 + /32P1 + /46Q2 + /51N + /51C + /51V + /64G1 + /64G2
          + /60LOP + /81D1 + /81D2 + \81D1 + \81D2 + /BNDA
          + /BNDT + /INAD
OUT101  =TRIP1
OUT102  =TRIP2
OUT103  =TRIP3
OUT104  =TRIP4
OUT105  =CLOSE
OUT106  =60LOP
OUT107  =24D1T + 46Q1T + BCW + BNDA + BNDT + !(DCLO * DCHI)
OUT201  =0
OUT202  =0
OUT203  =0
OUT204  =0
OUT205  =0
OUT206  =0
OUT207  =0
OUT208  =0
OUT209  =0
OUT210  =0
OUT211  =0
OUT212  =0


Global Settings:

LER     = 15        PRE     = 4         FP_TO   = 15        DATE_F  = MDY
DCLOP   = OFF       DCHIP   = OFF       FNOM    = 60        PHROT   = ABC
DELTA_Y = Y
TGR     = 3
SS1     =0
SS2     =0
```

(continued on next page)

```
                                (continued from previous page)

BKMON   =TRIP
COSP1   = 10000     COSP2   = 150       COSP3   = 12
KASP1   = 1.2       KASP2   = 8.0       KASP3   = 20.0
IN101D  = 0.50      IN102D  = 0.50      IN103D  = 0.50      IN104D  = 0.50
IN105D  = 0.50      IN106D  = 0.50
IN201D  = 0.50      IN202D  = 0.50      IN203D  = 0.50      IN204D  = 0.50
IN205D  = 0.50      IN206D
NLB1    =GEN SHUTDOWN   CLB1    =RETURN  SLB1    =        PLB1    =TRIP
NLB2    =
NLB3    =
NLB4    =
NLB5    =
NLB6    =
NLB7    =
NLB8    =
NLB9    =
NLB10   =
NLB11   =
NLB12   =
NLB13   =
NLB14   =
NLB15   =
NLB16   =
FP_I    = Y         FP_VPP  = Y         FP_VP   = N         FP_MW   = Y
FP_FR   = Y

DP1     =IN101
DP1_1   =GEN BKR CLOSED   DP1_0   =GEN BKR OPEN
DP2     =IN102
DP2_1   =FIELD BKR CLOSED DP2_0   =FIELD BKR OPEN
DP3     =SG1
DP3_1   =GROUP 1 ACTIVE   DP3_0   =GROUP 2 ACTIVE
DP4     =SV2T
DP4_1   =INAD ARMED       DP4_0   =
DP5     =LT2
DP5_1   =INAD TRIP        DP5_0   =
DP6     =LT1
DP6_1   =SHUTDOWN TRIP    DP6_0   =
DP7     =LT5
DP7_1   =AB OP TRIP       DP7_0   =
DP8     =0
DP8_1   =                 DP8_0   =
DP9     =0
DP9_1   =                 DP9_0   =
DP10    =0
DP10_1  =                 DP10_0  =
DP11    =0
DP11_1  =                 DP11_0  =
DP12    =0
DP12_1  =                 DP12_0  =
DP13    =0
DP13_1  =                 DP13_0  =
DP14    =0
DP14_1  =                 DP14_0  =
DP15    =0
DP15_1  =                 DP15_0  =
DP16    =0
DP16_1  =                 DP16_0  =
=>
=>
```

Figure 11.2: Example Standard 15-Cycle Event Report 1/4-Cycle Resolution

```
=>EVE GND <Enter>

GENERATOR                          Date: 03/01/04   Time: 11:07:41.502
TERMINAL

FID=SEL-300G-X322-V30H425X142-Z005004-D20040224       CID=1946

   Voltage Magnitudes and Related Elements
                        6 TN
                        4 66 Out  In
   Voltages (Volts Sec) GG44 1357 135
     VP3    VN3    VN1  12GG 246A 246
[1]
    2.03   2.51   0.01  .... .... ...
    2.03   2.51   0.01 *.... .... ...
    2.05   2.52   0.01  .... .... ...
    2.05   2.52   0.00  .... .... ...
        [Thirteen cycles of data not shown in this example]
 [15]
    4.04   0.65   0.09  .2.N .... ...
    4.03   0.65   0.09  .2.N .... ...
    4.05   0.75   0.08  .2.N .... ...
    4.04   0.75   0.08  .2.N .... ...
=>
```

Figure 11.3: Example EVE GND Command Report

Figure 11.4 and Figure 11.5 look in detail at 1 cycle of A-phase current (channel IA) identified in Figure 11.2. Figure 11.4 shows how the event report ac current column data relates to the actual sampled waveform and rms values. Figure 11.5 shows how the event report current column data can be converted to phasor rms values. Voltages are processed similarly.

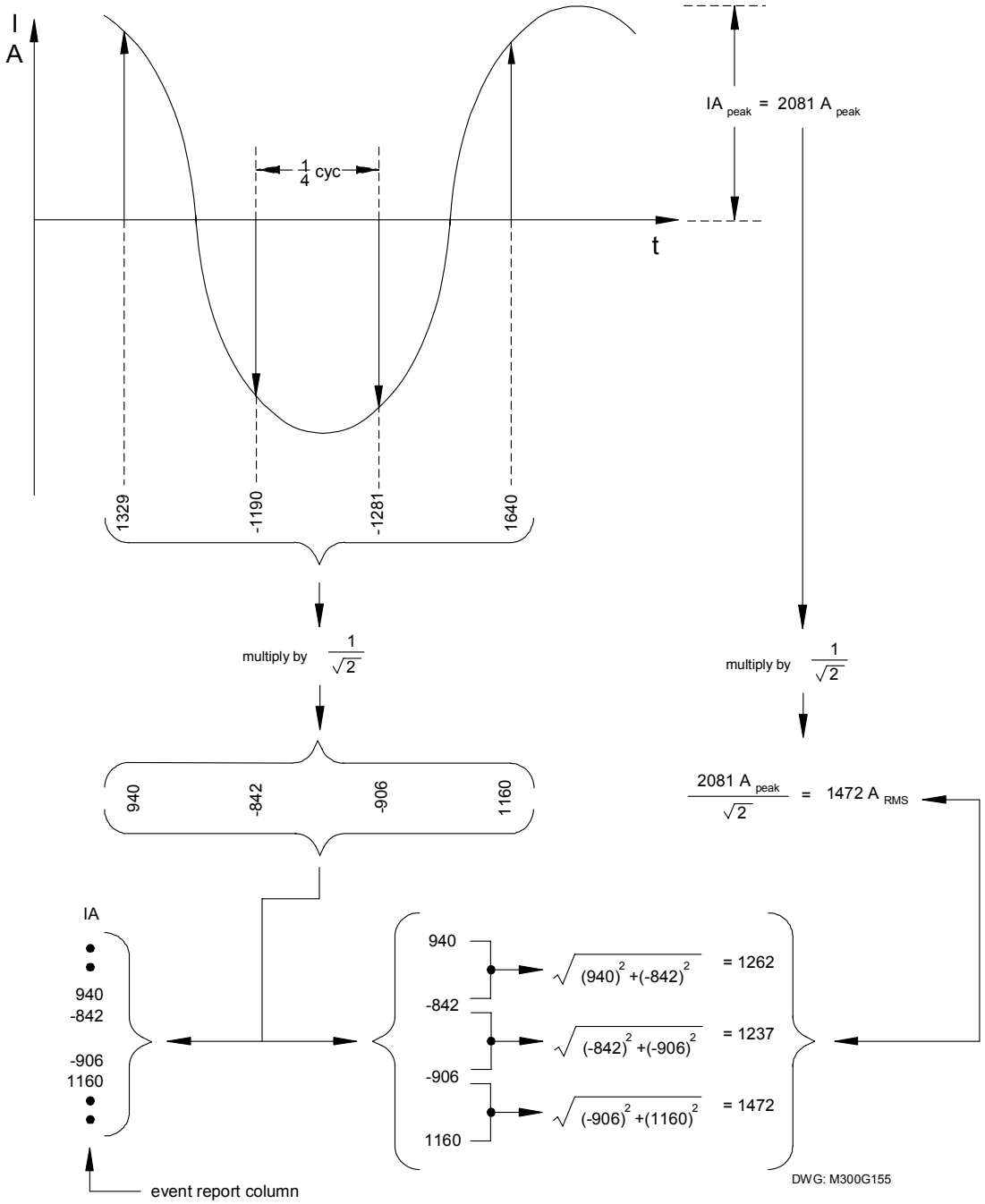

Figure 11.4: Derivation of Event Report Current Values and RMS Current Values From Sampled Current Waveform

In Figure 11.4, note that any two rows of current data from the event report in Figure 11.2, 1/4 cycle apart, can be used to calculate rms current values.

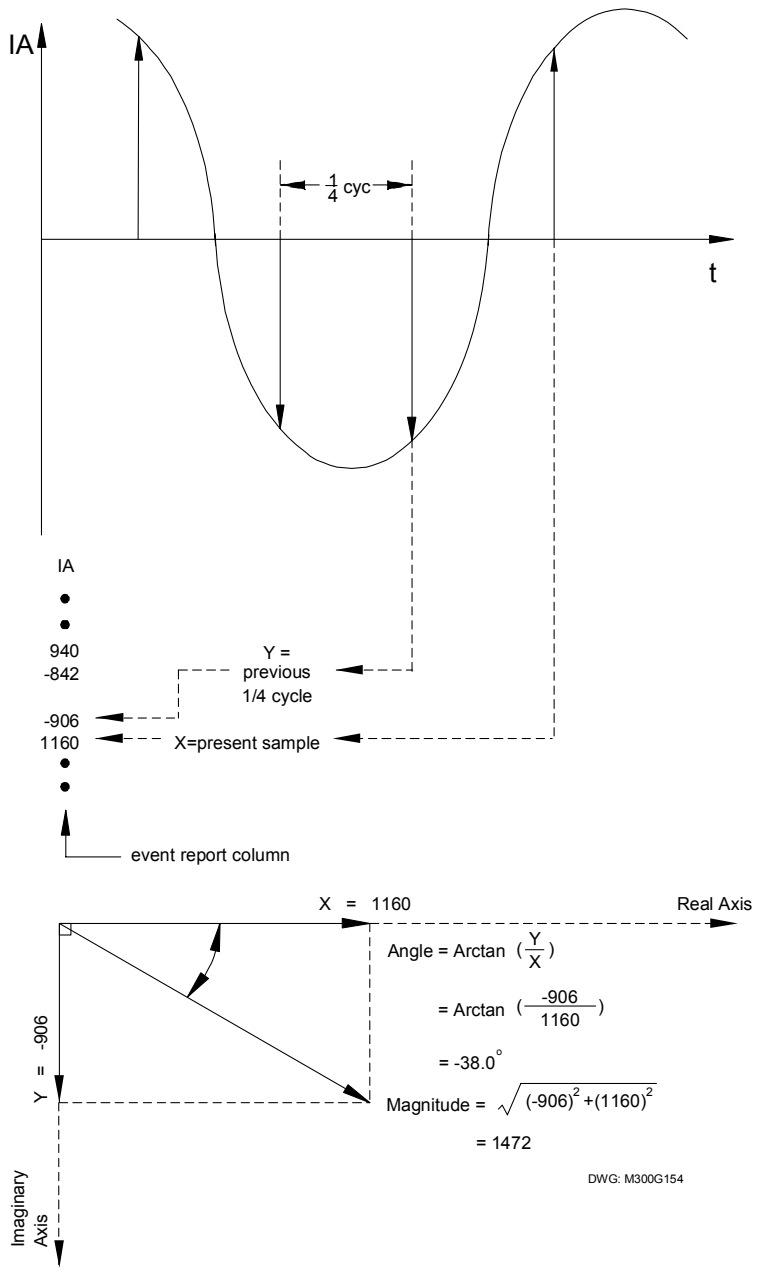

Figure 11.5: Derivation of Phasor RMS Current Values From Event Report Current Values

In Figure 11.5, note that two rows of current data from the event report in Figure 11.2, 1/4 cycle apart, can be used to calculate phasor rms current values. In Figure 11.5, at the present sample, the phasor rms current value is:

$$IA = 1472\ A\ \angle{-38.0°}$$

The present sample (IA = 1160 A) is a real rms current value that relates to the phasor rms current value:

$$1472\ A * \cos(-38.0°) = 1160\ A$$

EXAMPLE SEQUENTIAL EVENTS RECORDER (SER) REPORT

The following example SER report in Figure 11.6 (from a Model 0300G0 relay) also corresponds to the example standard 15-cycle event report in Figure 11.2.

```
GENERATOR                          Date: 01/30/00    Time: 10:20:45.872
TERMINAL

FID=SEL-300G-X207-V31H425XX4X-Z001001-D200000217       CID=04B0

#     DATE      TIME           ELEMENT           STATE

22    01/20/98  09:09:58.611   51N               Asserted
21    01/20/98  09:09:58.611   64G1              Asserted
20    01/20/98  09:09:58.611   50N1              Asserted
19    01/20/98  09:09:58.714   50N1T             Asserted
18    01/20/98  09:09:58.714   86_TRIP           TRIPPED
17    01/20/98  09:09:58.714   PRIME_MVR_TR      TRIPPED
16    01/20/98  09:09:58.714   FIELD_BKR_TR      TRIPPED
15    01/20/98  09:09:58.714   GEN_MAIN_TR       TRIPPED
14    01/20/98  09:09:58.714   FAULT_TRIP        TRIPPED
13    01/20/98  09:09:58.760   GEN_MAIN_BKR      OPENED
12    01/20/98  09:09:58.810   60LOP             Asserted
11    01/20/98  09:09:58.826   51N               Deasserted
10    01/20/98  09:09:58.826   50N1T             Deasserted
9     01/20/98  09:09:58.826   50N1              Deasserted
8     01/20/98  09:09:58.826   FAULT_TRIP        RESET
7     01/20/98  09:09:58.826   FIELD_BKR         OPENED
6     01/20/98  09:09:58.830   64G1              Deasserted
5     01/20/98  09:09:58.876   86_TRIP           RESET
4     01/20/98  09:09:58.876   PRIME_MVR_TR      RESET
3     01/20/98  09:09:58.876   FIELD_BKR_TR      RESET
2     01/20/98  09:09:58.876   GEN_MAIN_TR       RESET
1     01/20/98  09:10:00.828   INAV_ENR_SCHM     ARMED
```

Figure 11.6: Example Sequential Events Recorder (SER) Event Report

The SER event report rows in Figure 11.6 are explained in the following text, numbered in correspondence to the # column. The circled, numbered comments in Figure 11.2 also correspond to the # column numbers in Figure 11.6. The SER event report in Figure 11.6 contains records of events that occurred after the standard event report in Figure 11.2.

Item #	Explanation
22, 21, 20	Neutral time-overcurrent element, 51N, 100% stator ground element, 64G1, and neutral definite-time overcurrent element, 50N1, pick up and start timing at fault inception.
19	50N1D definite time-delay expires and 50N1T Relay Word bit asserts. Related settings: 50N1D = 0.10 seconds Time difference: 09:09:58.714 – 09:09:58.611 = 0.103 seconds
18, 17, 16, 15, 14	At the same instant, the relay asserts TRIP4, TRIP3, TRIP2, TRIP1, and SV3, aliased in the SER report as: 86_TRIP PRIME_MVR_TR FIELD_BKR_TR GEN_MAIN_TR FAULT_TRIP
13	The generator main circuit breaker opens, opening its 52a contact and deasserting optoisolated input IN101. The relay settings set 52A = IN101, and the alias settings define the message: GEN_MAIN_BKR OPENED when the 52A Relay Word bit (input IN101) deasserts.
12	Following the end of the example event report, 60LOP asserts due to declining generator phase voltages.
11, 10, 9, 8, 7	Declining neutral current allows the 51N, 50N1, and 50N1T neutral overcurrent elements to deassert. This allows the SV3 variable (FAULT_TRIP) to deassert. The field circuit breaker auxiliary contact connected to IN102 opens, deasserting the input, and causing the message: FIELD_BKR OPENED
6	Declining neutral voltage allows the 64G1 element to deassert.
5, 4, 3, 2	TRIP4, TRIP3, TRIP2, and TRIP1, aliased as 86_TRIP, PRIME_MVR_TR, FIELD_BKR_TR, GEN_MAIN_TR, deassert after having been closed a minimum of 0.16 seconds. Related settings: TDURD = 0.16 seconds Time difference: 09:09:58.876 – 09:09:58.714 = 0.162 seconds
1	Two seconds after IN102 deasserted, SV2T asserts, arming the inadvertent energization protection scheme.

DIFFERENTIAL EVENT REPORT HEADERS

The differential event report headers in Figure 11.7 (from a Model 0300G1 Relay) correspond to the descriptions above.

Like standard format event reports, in differential event reports the arrow (>) in the column following the IC87 column identifies the “trigger” row. This is the row that corresponds to the Date and Time values at the top of the event report.

The asterisk (*) in the column following the IC87 column identifies the row with the maximum phase current. The maximum phase current is calculated from the row identified with the asterisk and the row 1 quarter-cycle previous. These currents are listed at the end of the event report in the event summary. If the "trigger" row (>) and the maximum phase current row (*) are the same row, the * symbol takes precedence.

```
GENERATOR                        Date: 01/30/00    Time: 10:20:01.350
TERMINAL

FID=SEL-300G-X207-V31H425XX4X-Z001001-D20000217        CID=04B0

                                              8
                                              7  Out  In
            Currents (Amps Pri)               UB 1357 135
   IA     IB     IC     IA87   IB87   IC87   RL 246A 246
[1]
   488  -1824   1332     -486   1823  -1333  .. ...7 ...
  1820   -488  -1333    -1816    488   1334 *.. ...7 ...
  -488   1824  -1332      487  -1823   1334  .. ...7 ...
 -1821    488   1333     1816   -488  -1334  .. ...7 ...
[2]
.
.
.
Differential Current Magnitudes and Control Elements
                                                              8   8   8
       Operate             Restraint            2nd Harm      7   7   7   8
                      (Multiples of TAP)                      U   R   B   7
  I1     I2     I3     I1     I2     I3     I1     I2     I3   123 123 123 B
[1]
  0.00   0.00   0.00   0.94   0.95   0.94   0.01   0.00   0.00 ... ... ... .
  0.00   0.01   0.00   0.94   0.95   0.94   0.00   0.00   0.00*... ... ... .
  0.00   0.00   0.00   0.94   0.95   0.94   0.00   0.00   0.00 ... ... ... .
  0.00   0.00   0.00   0.94   0.95   0.94   0.00   0.00   0.00 ... ... ... .
[2]

Event: TRIG  Frequency:  60.00
Targets:
Currents (A Pri), ABCNGQ:   1885  1888  1884     1     1     0

Group 1 Settings:

RID     =GENERATOR
TID     =TERMINAL
.
.
.
```

Figure 11.7: Example Differential Event Report 1/4-Cycle Resolution

TABLE OF CONTENTS

SECTION 12: MAINTAIN AND TROUBLESHOOT RELAY 12-1

Relay Maintenance Testing 12-1
Relay Misoperation 12-2
Relay Troubleshooting 12-3
    Inspection Procedure 12-3
    Troubleshooting Procedure 12-3
Relay Calibration 12-4

SECTION 12: MAINTAIN AND TROUBLESHOOT RELAY

RELAY MAINTENANCE TESTING

The maintenance testing philosophy for SEL relays is very simple. Our recommendations are summarized below:

a. Monitor the relay self-test ALARM contact to ensure that relay problems detected by the relay itself are quickly noticed and corrected.

b. Review relay generated event reports and SER records following each operation to ensure that relay and connection equipment performance is nominal.

c. Periodically check relay METER data for sensibility.

d. Periodically perform relay I/O operation checks.

SEL relays use extensive self-testing capabilities that detect and indicate relay problems when they occur. By monitoring the relay ALARM contact, you are immediately notified when the relay is out of service and can take appropriate steps to diagnose and correct the problem. Relay functions such as the dc monitor function and loss-of-potential function should also be used to alarm for abnormal conditions and failures that can be detrimental to the protection system performance if not immediately corrected.

SEL relay reporting functions such as event reports and SER records can quickly indicate problems with the relay and other connected equipment. Using the event report current, voltage, and relay element data, you can determine that the relay protection elements are operating properly. Using the event report input and output data, you can determine that the relay is asserting outputs at the correct instants and that auxiliary equipment is operating properly. We recommend you review all relay event reports and perform detailed reviews of reports for operations that are not nominal.

Periodically verify that the relay is making correct and accurate current and voltage measurements by comparing the relay METER output to other meter readings on the protected generator. Often, simple sensibility checks are sufficient to indicate a serious problem. Relay calibration can be verified by comparing the relay METER readings to the readings of a calibrated meter in the same circuit. Due to the hardware design of this relay, typically, the relay accuracy will not drift gradually, but rather will be obviously erroneous if there is a problem with the relay data acquisition system.

To verify correct operation of relay output contacts, perform the following steps:

Isolate the relay output contacts from their dc circuits.

Using the Access Level B **PULSE** command or the front-panel CNTRL function, close the relay output contacts individually (see ***Section 9: Front-Panel Operation*** and ***Section 10: Serial Port Communications and Commands*** for more detailed information regarding use of the contact control functions).

Use a continuity tester to verify that the relay contact closes when commanded.

Return the relay contacts to service in their individual circuits. Perform any additional desired tests to verify the circuit performance.

To verify correct operation of relay optoisolated inputs, perform the following steps:

1. Isolate the relay optoisolated inputs from their dc circuits.

Using the Access Level 1 **TAR** command or the front-panel TAR function, monitor the state of the optoisolated inputs individually while you apply rated dc control voltage to the rear-panel terminals for each input (see ***Section 9: Front-Panel Operation*** and ***Section 10: Serial Port Communications and Commands*** for more detailed information regarding use of the contact control functions).

Return the relay optoisolated inputs to service in their individual circuits. Perform any additional desired tests to verify the circuit performance.

These tests do not need to be performed more frequently than your present protection maintenance interval. Two- to five-year intervals are acceptable, particularly if relay event reports are reviewed as suggested above.

RELAY MISOPERATION

In the unlikely event of a relay misoperation, perform the following steps as soon as it is safe and practical to do so:

1. Do not remove dc power from the relay. If desired, you may isolate the relay contact outputs.

On a sheet of paper, record the state of the front-panel target LEDs. Also record the contents of rotating display messages from the front-panel LCD display.

Press the front-panel STATUS pushbutton. If the relay STATUS is OK, continue with Step 4. If STATUS indicates a WARN or FAIL condition, use the Up and Down arrow pushbuttons and note the failed self-test condition. Contact the factory or your local Technical Service Center for assistance.

Using a PC, establish Access Level 1 communication with the relay. Using your terminal emulation software text capture facility, open an ASCII text file on your PC disk drive to record relay data.

With the text file open, execute the relay **HISTORY** command. With the relay response on the PC screen, note the relay event report numbers associated with the date and time of the misoperation. If the operation involves optional current differential elements, record the differential formal event report using **EVE DIF *n***. Use the **EVE *n*** command to view and store the event reports of interest. Use the **SER** command to view and store the relay sequence of events record for the misoperation. Use the **SHO R** command to record the active SER settings. Close the text file. ***Section 10: Serial Port Communications and Commands*** contains information on establishing serial communications with the relay and more details on the commands above.

You can view the stored ASCII text file containing the event information using most standard word processing packages. It is usually helpful to select an 8 or 9 point Courier font to view or print the event data, as this helps line up the data rows vertically on a page.

Review the event and SER information to determine the cause of the misoperation. ***Section 11: Event Reports and SER Functions*** contains information and examples to assist with event and SER report review.

SEL Application Engineers are available to assist with this review, if necessary. You may be asked to describe, fax, or e-mail the relay information you collected in the steps above as part of this review.

RELAY TROUBLESHOOTING

Inspection Procedure

Complete the following procedure before disturbing the relay. After you finish the inspection, proceed to the ***Troubleshooting Procedure***.

1. Measure and record the power supply voltage at the power input terminals.

Check to see that the power is on. Do not turn the relay off.

Measure and record the voltage at all control inputs.

Measure and record the state of all output relays.

Troubleshooting Procedure

All Front-Panel LEDs Dark

1. Input power not present or fuse is blown.

Self-test failure.

Cannot See Characters on Relay LCD Screen

1. Relay is de-energized. Check to see if the ALARM contact is closed.

LCD contrast is out of adjustment. Use the steps below to adjust the contrast.

a. Remove the relay front panel by removing the six front-panel screws.

b. Press any front-panel button. The relay should turn on the LCD back lighting.

c. Locate the contrast adjust potentiometer adjacent to the serial port connector.

d. Use a small screwdriver to adjust the potentiometer.

e. Replace the relay front panel.

Relay Does Not Respond to Commands From Device Connected to Serial Port

1. Communications device not connected to relay.

Relay or communications device at incorrect baud rate or other communication parameter incompatibility, including cabling error.

Relay serial port has received an XOFF, halting communications. Type **<Ctrl>Q** to send the relay an XON and restart communications.

Relay Does Not Respond to Faults

1. Relay improperly set.

Improper test source settings.

CT or PT input wiring error.

Analog input cable between transformer secondary and main board loose or defective.

Failed relay self-test.

RELAY CALIBRATION

The SEL-300G Relay is factory-calibrated. If you suspect that the relay is out of calibration, please contact the factory.

FACTORY ASSISTANCE

We appreciate your interest in SEL products and services. If you have questions or comments, please contact us at:

Schweitzer Engineering Laboratories, Inc.
2350 NE Hopkins Court
Pullman, WA USA 99163-5603
Tel: +1.509.332.1890
Fax: +1.509.332.7990
Internet: www.selinc.com

TABLE OF CONTENTS

SECTION 13: DIFFERENTIAL ELEMENT SETTINGS.....13-1

Introduction 13-1
Ground Differential Element (Models 0300G0 and 0300G2) 13-1
Element Description 13-1
Setting Calculation 13-3
Element Operating Characteristics 13-3
Percentage Restrained Differential Element Overview (Models 0300G1 and 300G3) 13-4
Settings For Generator Protection 13-8
Setting Description 13-8
Setting Calculation 13-9
Settings For Unit Protection 13-11
Setting Description 13-11
Setting Calculation 13-12
Differential Element Transformer Connection and Ratio Compensation 13-16
Restrained Differential Element Operating Characteristics 13-17

TABLES

Table 13.1: Connection and TAP Compensation 13-16

FIGURES

Figure 13.1: 87N Element Logic Diagram 13-3
Figure 13.2: Fundamental and Second-Harmonic Filters Provide Current Inputs to Differential Elements 13-4
Figure 13.3: Operate, Restraint, and Second-Harmonic Blocking Current Calculations 13-5
Figure 13.4: Differential Element Logic Diagram 13-6
Figure 13.5: Restrained Differential Element Logic When E87 = G 13-6
Figure 13.6: Restrained Differential Element Logic When E87 = T and IHBL = N 13-7
Figure 13.7: Restrained Differential Element Logic When E87 = T and IHBL = Y 13-7
Figure 13.8: Differential Element Operating Characteristics 13-17

SECTION 13: DIFFERENTIAL ELEMENT SETTINGS

INTRODUCTION

The SEL-300G1/300G3 Relays are equipped with differential current inputs. These relays use these current inputs to operate nondedicated phase, negative-sequence, and residual overcurrent elements, described in ***Section 2: Relay Element Settings***. These relays also use these inputs to develop percentage restrained phase current differential elements, whose operation and settings are described in this section.

The SEL-300G0/300G2 Relays are not equipped with differential current inputs, but provide a ground current differential element (87N) that operates based on the difference between the measured neutral current and the sum of the three phase current inputs. The 87N element provides sensitive ground fault detection on resistance-grounded and solidly grounded generators, particularly where multiple generators are connected directly to a load bus. This element should not be applied to protect high-impedance grounded generators.

GROUND DIFFERENTIAL ELEMENT (MODELS 0300G0 AND 0300G2)

Element Description

Functional Description

The SEL-300G0/300G2 Relays provide two definite-time delayed ground current differential elements designed to detect ground faults on resistance grounded and solidly grounded generators. Because these elements are current-based, they cannot provide ground fault coverage for 100 percent of the stator windings. They do, however, offer selective ground fault protection because they do not respond to ground faults beyond the generator phase current transformers. This quality makes the element well suited to protect generators connected to multiple-unit buses, or for generators connected to a load-bus, such as might be found in an industrial installation.

The relay measures the generator neutral current using the neutral CT connected to the relay IN input. It then calculates the residual current, which is the sum of the three phase current inputs. The residual current is adjusted by the ratio of the CTR and CTRN settings to scale the residual current in terms of the secondary neutral current, then the difference is calculated. Normally, under balanced load or external ground fault conditions, the difference current should be zero. In the event of an internal ground fault, the difference current will be nonzero. If the difference current magnitude is greater than the element pickup setting, the element picks up and begins to operate the definite time-delay. If the difference current remains above the pickup setting for the duration of the definite time-delay, the time-delayed element Relay Word bit asserts.

Note: The 87N elements are applicable only when the generator and relay are connected as shown in Figures 5.16 or 5.17. Do not attempt to use this element with high-impedance grounded generators, as the primary residual current they supply during a ground fault is too low for secure, dependable protection.

Setting Descriptions

Enable Ground Differential Protection (Y,N) E87N = Y

Set E87N = Y to enable ground differential elements. If ground differential protection is not required, set E87N = N. When E87N = N, the 87N1P, 87N1T, 87N2P, and 87N2T Relay Word bits are inactive and the following relay settings are hidden and do not need to be entered.

Level 1 Ground Differential Pickup
(0.1 • CTR/CTRN–15 A, 5 A models) 87N1P = 0.5
(0.02 • CTR/CTRN–3 A, 1 A models)

Level 1 Ground Differential Time Delay (0.00 to 400.00 s) 87N1D = 0.10

Set the 87N1P element sensitively to detect the maximum number of generator ground faults. With this high sensitivity, there is some risk of element pickup due to phase current transformer saturation during external three-phase faults close to the generator. To help ensure that this pickup does not cause a misoperation, set the 87N1D time delay longer than the longest clearing time for a severe, external fault.

Level 2 Ground Differential Pickup
(0.1 • CTR/CTRN–15 A, 5 A models) 87N2P = 1.5
(0.02 • CTR/CTRN–3 A, 1 A models)

Level 2 Ground Differential Time Delay (0.00 to 400.00 s) 87N2D = 0.00

Set the 87N2P element less sensitively to detect severe ground faults high in the generator windings or on the generator bushings. The higher overcurrent setting allows a shorter or zero time-delay.

87N Element Torque Control (SELOGIC® control equation) 87NTC = 1

The ground differential elements are enabled when the result of 87NTC equals logical 1. The elements are blocked when the 87NTC SELOGIC control equation result equals logical 0. Typically, the element can be enabled continuously, suggesting the logical 1 setting.

Relay Word Bits

Relay Word Bit	Function Description	Typical Applications
87N1P	Instantaneous Level 1 Ground Differential Element Pickup	Indication, Testing, SER, Event Triggering
87N1T	Time-delayed Level 1 Ground Differential Element Pickup	Indication, Testing, Tripping
87N2P	Instantaneous Level 2 Ground Differential Element Pickup	Indication, Testing, SER, Event Triggering
87N2T	Time-delayed Level 2 Ground Differential Element Pickup	Indication, Testing, Tripping

Setting Calculation

Information Needed

- Phase and neutral current transformer ratios, CTR and CTRN
- Maximum generator ground fault current, IG

Recommendations

In resistance grounded generator applications, the generator contribution to ground faults is limited by the size of the neutral resistor. To determine the minimum sensitivity of the 87N element, simply divide the generator ground fault current contribution, IG, by the neutral current transformer ratio, CTRN. When the system contribution to the generator ground fault is zero, the ground differential current is:

I diff = IG/CTRN A secondary

Any residual current supplied by the system during the generator fault increases the relay sensitivity.

When the protected generator is connected to a bus which can source ground fault current, set 87N2P approximately equal to I diff, calculated above. 87N1P can be set more sensitively to achieve additional sensitivity and operate with time-delay for external fault security.

Ground Differential Element Tripping

Because the ground differential elements detect generator faults, tripping generally is applied to the generator main breaker, the field breaker, the prime mover, and the generator lockout relay. Refer to ***Section 4: SELOGIC Control Equations*** for more detail and examples of tripping SELOGIC control equations.

Element Operating Characteristics

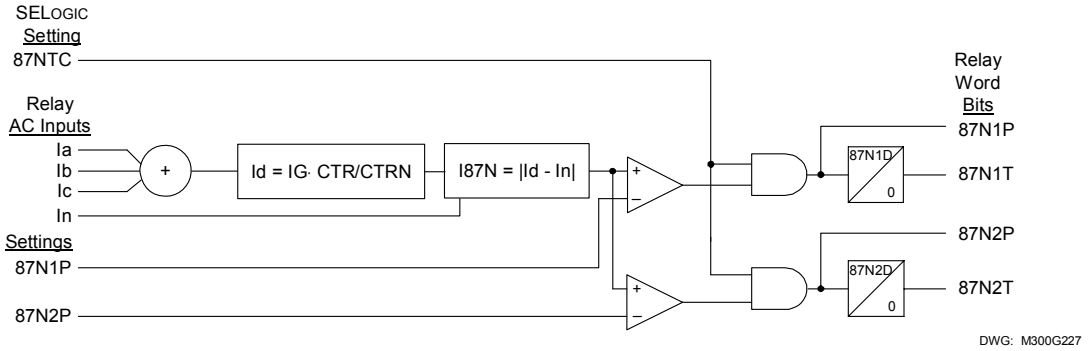

Figure 13.1: 87N Element Logic Diagram

PERCENTAGE RESTRAINED DIFFERENTIAL ELEMENT OVERVIEW (MODELS 0300G1 AND 300G3)

To simplify the setting process for the majority of applications, the SEL-300G1/300G3 Relay differential element is enabled by setting E87 equal to either G or T.

When E87 = G, several of the differential element settings are fixed to default values, leaving only three settings to consider. Set E87 = G when the protected generator is the only apparatus in the differential zone, as shown in Figure 5.13.

When E87 = T, additional settings are available to compensate for the inclusion of a generator step-up transformer in the differential zone, as shown in Figure 5.15.

Setting E87 = N disables differential protection and hides the remaining settings associated with the element.

When E87 = G or T, the differential protection function includes a sensitive, percentage restrained differential element and an unrestrained element that must be set less sensitively.

When E87 = G or T, the relay measures the fundamental frequency currents from the phase inputs (IA1, IB1, and IC1) and the differential inputs (IA871, IB871, and IC871). See Figure 13.2. The relay also measures the second-harmonic current quantities for each set of inputs. The relay mathematically compensates the measured currents, taking into account the current transformer connections, the power transformer connections (if E87 = T), and the TAP settings. Using the compensated currents, the relay next calculates the operate quantities (IOP1, IOP2, and IOP3), the restraint quantities (IRT1, IRT2, and IRT3), and the second-harmonic blocking quantities (I1F2, I2F2, and I3F2).

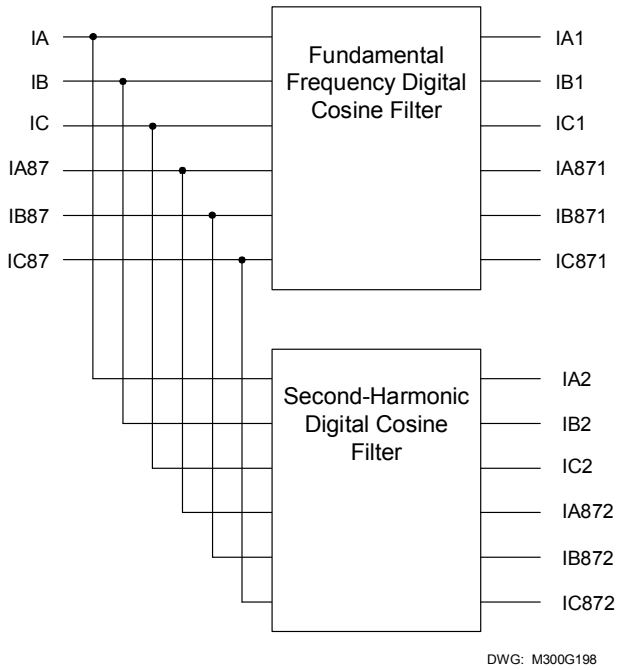

Figure 13.2: Fundamental and Second-Harmonic Filters Provide Current Inputs to Differential Elements

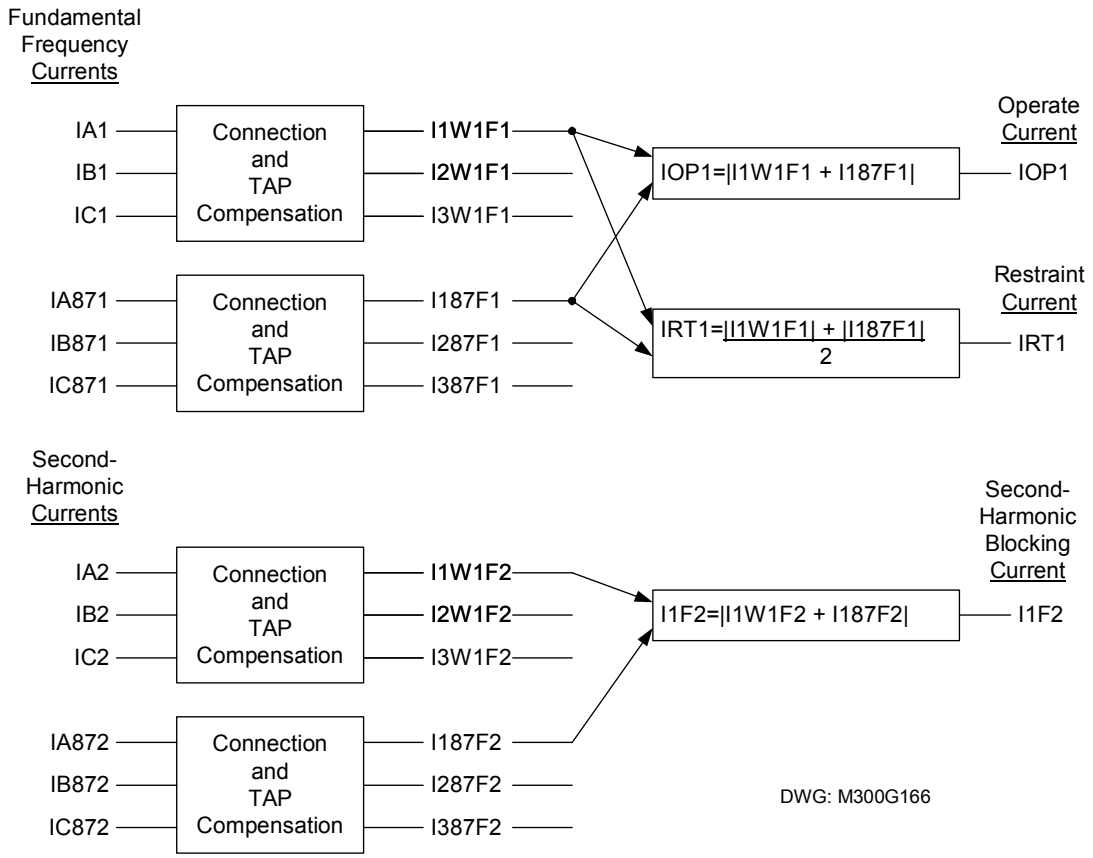

Figure 13.3: Operate, Restraint, and Second-Harmonic Blocking Current Calculations

The front-panel and serial port **METER DIF** commands report the present values of IOP1, IOP2, IOP3, IRT1, IRT2, and IRT3 in multiples of TAP. These magnitudes also are reported in the differential format event report, obtained using the **EVE DIF** serial port command. The **METER DIF** command response also reports the operate currents in per unit of the individual restraint currents. These values are a direct report of the differential element mismatch and are very useful when commissioning the relay. More details on these commands are contained in ***Section 9: Front-Panel Operation***, ***Section 10: Serial Port Communications and Commands***, and ***Section 11: Event Reports and SER Functions***.

Figure 13.4 illustrates the differential element logic. Figure 13.5, Figure 13.6, and Figure 13.7 describe the restrained differential element blocking logic for various relay settings.

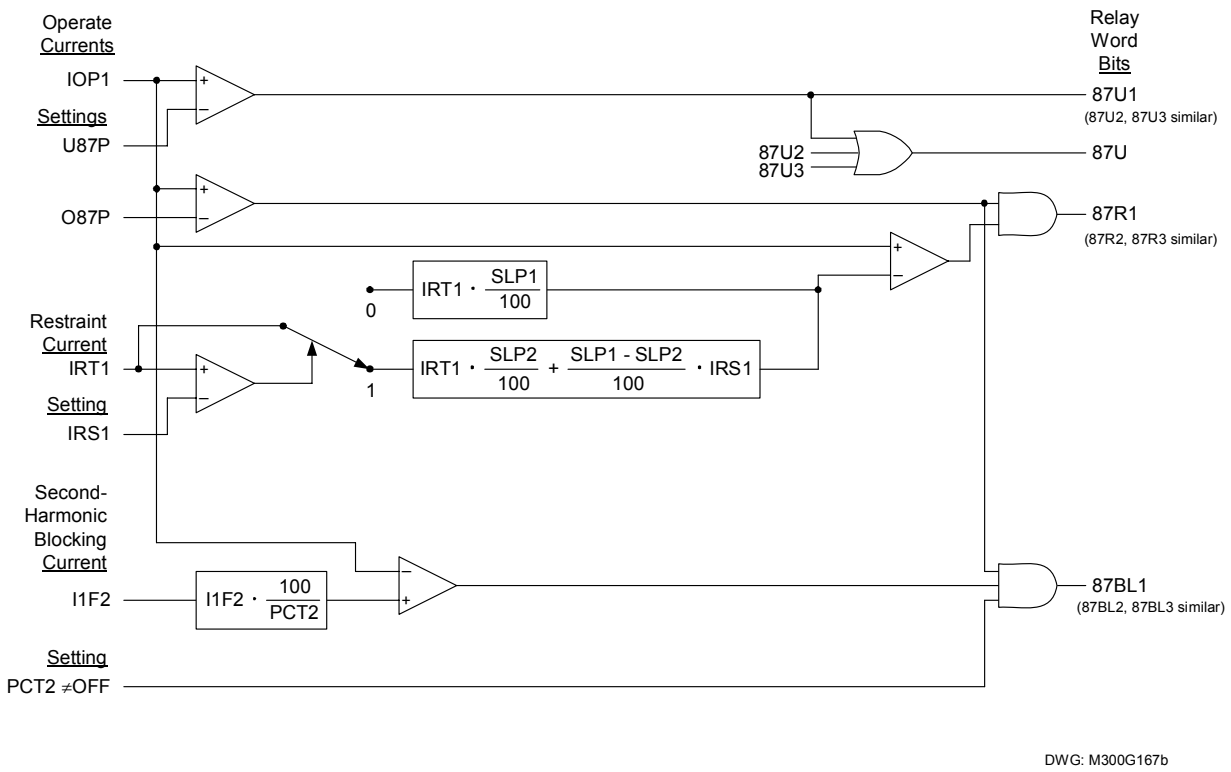

Figure 13.4: Differential Element Logic Diagram

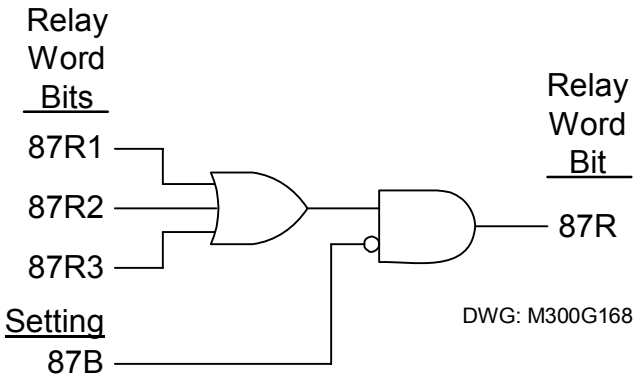

Figure 13.5: Restrained Differential Element Logic When E87 = G

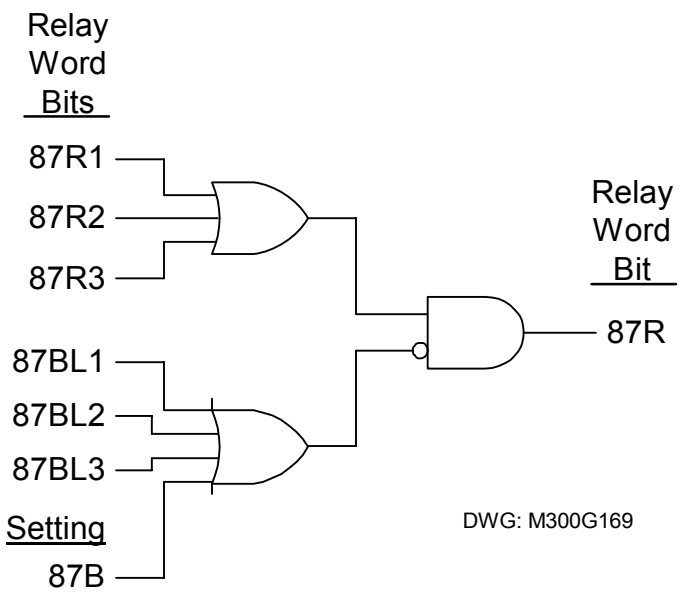

Figure 13.6: Restrained Differential Element Logic When E87 = T and IHBL = N

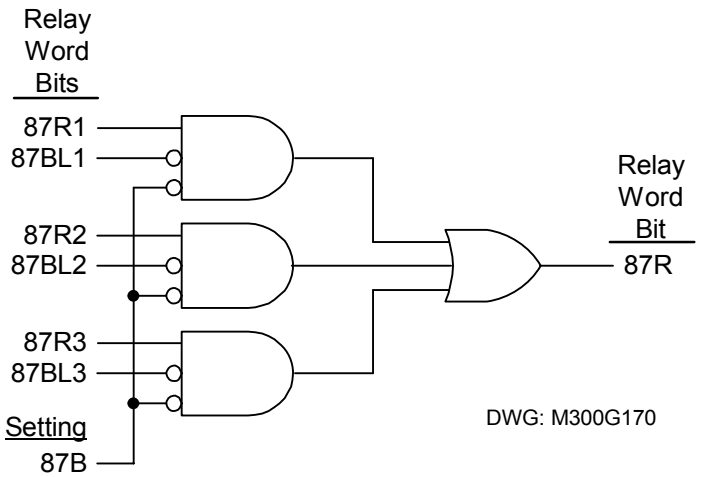

Figure 13.7: Restrained Differential Element Logic When E87 = T and IHBL = Y

Relay Word Bits

Relay Word Bit	Function Description	Typical Applications
87U	Unrestrained Differential Element Pickup	Tripping
87R	Restrained Differential Element Pickup	Tripping
87U1	Element 1 Unrestrained Element Pickup	Indication, Testing
87U2	Element 2 Unrestrained Element Pickup	Indication, Testing
87U3	Element 3 Unrestrained Element Pickup	Indication, Testing
87R1	Element 1 Restrained Element Pickup	Indication, Testing
87R2	Element 2 Restrained Element Pickup	Indication, Testing
87R3	Element 3 Restrained Element Pickup	Indication, Testing
87B	Restrained Element Block	Indication, Testing
87BL1	Element 1 Second-Harmonic Block	Indication, Testing
87BL2	Element 2 Second-Harmonic Block	Indication, Testing
87BL3	Element 3 Second-Harmonic Block	Indication, Testing

SETTINGS FOR GENERATOR PROTECTION

Setting Description

For generator current differential applications similar to those shown in Figure 5.13, the SEL-300G Relay offers simple generator differential protection, whose settings are described below:

Enable Differential Protection (G, T, N) E87 = G

Set E87 = G to enable differential protection elements in most generator differential applications. If differential protection is not required, set E87 = N. When E87 = N, the 87B, 87BL1, 87BL2, 87BL3, 87R, 87R1, 87R2, 87R3, 87U, 87U1, 87U2, and 87U3 Relay Word bits are inactive and the following relay settings are hidden and do not need to be entered.

Phase Input TAP Value TAP1 = Derived Quantity

87 Input TAP Value TAPD = Derived Quantity

Unrestrained Element Pickup, multiple of TAP (1.0–20.0) U87P = 10.0

Restrained Element Pickup, multiple of TAP (0.04–1.00) O87P = 0.30

Restraint Slope 1 Percentage (5–100%) SLP1 = 40

As you enter the relay settings, the relay will display the derived values of TAP1 and TAPD. You do not need to enter settings for TAP1 or TAPD when E87 = G.

The unrestrained differential element pickup is defined by the U87P setting. The 87U Relay Word bit asserts if any of the measured differential operate quantities, IOP1, IOP2, or IOP3, exceed the U87P setting. The restrained differential element pickup is defined by the O87P setting. The 87R Relay Word bit asserts depending on the measured operate and restraint currents, the percentage restraint slope setting, SLP1, the 87B SELOGIC control equation result, and several fixed settings discussed below.

The relay performs internal range checking on the U87P and O87P settings and the derived TAP quantities. The following secondary ranges are required:

$(0.1 \cdot In) \leq (U87P \cdot TAP_{min})$

$(U87P \cdot TAP_{max}) \leq (32 \cdot In)$

$(0.04 \cdot In) \leq (O87P \cdot TAP_{min})$

$(O87P \cdot TAP_{max}) \leq (32 \cdot In)$

where:

In = 1 A or 5 A rating of the relay phase current inputs

$TAP_{max}/TAP_{min} \leq 7.5$

where:

TAP_{max} is the larger and

TAP_{min} is the smaller of the two TAP values TAP1 and TAPD

If one of the U87P or O87P range checks fails, the relay will prompt you to reenter the differential pickup setting. When E87 = G, if the ratio of TAP_{max} to TAP_{min} is greater than 7.5, it typically indicates an error in the CTR or CTRD setting entry. The relay will indicate an error and prompt you for corrected CTR and CTRD settings. If the CTR and CTRD settings are correct and the TAP_{max}/TAP_{min} range check still fails, consider using E87 = T.

Restrained Element Block (SELOGIC control equation) 87B = 0

The percentage restrained differential element is disabled when the 87B SELOGIC control equation result is a logical 1. Most applications permit the 87 elements to be enabled all the time, suggesting the 87B should be set to logical 0.

When E87 = G, the relay hides the following settings, and uses their default values in the element definition:

XFMR Connection	TRCON = GEN
87 Input CT Connection (Y, DAB, DAC)	CTCON = Y
Restraint Slope 2 Percentage (OFF, 50–200%)	SLP2 = 100
Restraint Slope 1 Limit, multiple of TAP (1.0–16.0)	IRS1 = 3.0
Second-Harmonic Blocking Percent (OFF, 5–100%)	PCT2 = OFF

Setting Calculation

Unrestrained Differential Element Pickup Setting, U87P

The instantaneous, unrestrained differential element is intended to detect very high difference currents that clearly indicate an internal fault. This element responds only to the fundamental frequency component of the differential operate current and is not affected by the percentage restraint function. It should be set high enough to not respond to false difference current caused by differences in CT performance for heavy through-faults. Setting U87P = 10 generally provides satisfactory performance.

Note that the relay requires the following inequality be true:

$$(U87P \cdot TAP_{max}) \leq (32 \cdot In)$$

where:

In	= 1 A or 5 A rating of the relay phase current inputs
TAP_{max}	is the larger of the two quantities, INOM or INOM* (CTR/CTRD)

Restrained Differential Element Pickup Setting, O87P

Set the restrained element operate current pickup at a minimum value for increased sensitivity but high enough to avoid incorrect operation due to steady state CT error. An O87P setting of 0.3 generally provides satisfactory performance.

Note that the relay requires the following inequality be true:

$$(087P \cdot TAP_{min}) \geq (0.04 \cdot In)$$

where:

In	= 1 A or 5 A rating of the relay phase current inputs
TAP_{min}	is the smaller of the two quantities, INOM or INOM • (CTR/CTRD)

Restrained Differential Element Slope 1 Setting, SLP1

The sensitive differential element percentage restraint characteristic improves the element security during heavy through-faults. During the external fault, the CT ratio errors may increase, causing the relay to measure differential current. To prevent incorrect operation during this condition, the relay automatically increases the required operate current in direct proportion to the measured restraint current, by a settable amount, SLP1.

If the CT error for each of the two CTs is ±10% and the relay differential measurement error is ≤5%, then the minimum SLP1 setting is 25%.

Fixed Settings: SLP2, IRS1, PCT2

When E87 = G, the relay fixes the values of SLP2 = 100%, IRS1 = 3 per unit of TAP, and PCT2 = OFF. These settings disable second-harmonic blocking, which is not required in the vast majority of generator differential applications and set conservative values for the percentage restraint characteristic during external faults whose current is higher than three times TAP.

Derived Settings: TAP1, TAPD

When E87 = G, the relay derives the values of TAP1 and TAPD. TAP1 automatically is set equal to the generator nominal current in secondary amps, defined by the INOM setting. TAPD is set equal to the same current, placed in terms of secondary A at the differential input CTs: TAPD = INOM • CTR/CTRD.

The relay requires that the ratio of the maximum TAP to the minimum TAP be less than 7.5:1. In the vast majority of applications, CTR ≈ CTRD, so this requirement should not cause a problem. The relay uses the TAP1 and TAPD values in the Connection and TAP Compensation function shown in Figure 13.3. When E87 = G, only TAP compensation is performed. I1W1F1 equals IA1 divided by TAP1. I187F1 equals IA87 divided by TAPD.

Differential Element Tripping

The 87U and 87R differential elements detect faults and usually are used to trip the main generator breaker, the field breaker, the prime mover, and the generator lockout relay. Refer to ***Section 4: SELOGIC Control Equations*** for more detail and examples of tripping SELOGIC control equations.

SETTINGS FOR UNIT PROTECTION

Setting Description

For unit current differential applications similar to those shown in Figure 5.15, the SEL-300G offers differential protection that can compensate correctly for the ratio and phase shift of the generator step-up transformer.

Enable Differential Protection (G, T, N) E87 = T

Set E87 = T to enable differential protection elements when the generator step-up transformer is included in the differential zone. If differential protection is not required, set E87 = N. When E87 = N, the 87B, 87BL1, 87BL2, 87BL3, 87R, 87R1, 87R2, 87R3, 87U, 87U1, 87U2, and 87U3 Relay Word bits are inactive and the following relay settings are hidden and do not need to be entered.

XFMR High-Side Winding L-L Voltage (OFF, 1.0–1000.0 kV) VWDGD = 13.8

XFMR Connection (GEN, YY, YDAC, YDAB, DACDAC, DABDAB, DABY, DACY) TRCON = DABY

87 Input CT Connection (Y, DAB, DAC) CTCON = DAB

Phase Input TAP Value TAP1 = Derived Quantity

87 Input TAP Value TAPD = Derived Quantity

Unrestrained Element Pickup, multiple of TAP (1.0–20.0) U87P = 10.0

Restrained Element Pickup, multiple of TAP (0.04–1.00) O87P = 0.30

Restraint Slope 1 Percentage (5–100%) SLP1 = 40

When a generator step-up transformer is included in the differential zone, set VWDGD equal to the transformer rated high-side voltage in line-to-line kilovolts. If you are setting E87 = T, but not including a power transformer in the differential zone, either set VWDGD equal to the generator rate line-to-line voltage or set VWDGD = OFF.

The TRCON setting is defined by the step-up transformer connections. The CTCON setting is defined by the connection of the 87 input current transformers.

As you enter the relay settings, the relay will display the derived values of TAP1 and TAPD. If you enter a setting for VWDGD, you do not need to enter settings for TAP1 or TAPD when E87 = T. When you set VWDGD = OFF, you will need to calculate and enter settings for TAP1 and TAPD using the instructions below.

The unrestrained differential element pickup is defined by the U87P setting. The 87U Relay Word bit asserts if any of the measured differential operate quantities, IOP1, IOP2, or IOP3, exceeds the U87P setting. The restrained differential element pickup is defined by the O87P

setting. The 87R Relay Word bit asserts depending on the measured operate and restraint currents, the percentage restraint slope settings, SLP1, SLP2, and IRS1, the second-harmonic blocking function defined by PCT2 and IHBL settings, and the 87B SELOGIC control equation result.

The relay performs internal range checking on the U87P and O87P settings and the derived TAP quantities. The following secondary ranges are required:

$0.1 \cdot \text{In A secondary} \leq \text{U87P} \cdot \text{TAP}_{min}$

$\text{U87P} \cdot \text{TAP}_{max} \leq 32 \cdot \text{In A secondary}$

$0.04 \cdot \text{In A secondary} \leq \text{O87P} \cdot \text{TAP}_{min}$

$\text{O87P} \cdot \text{TAP}_{max} \leq 32 \cdot \text{In A secondary}$

where:

In = 1 A or 5 A rating of the relay phase current inputs

$\text{TAP}_{max}/\text{TAP}_{min} \leq 7.5$

If one of the U87P or O87P range checks fails, the relay will prompt you to reenter the differential pickup setting. If the ratio of TAP_{max} to TAP_{min} is greater than 7.5, it typically indicates an error in the CTR, CTRD, or VWDGD setting entry. The relay will indicate an error and prompt you for corrected settings. If the settings are correct and the $\text{TAP}_{max}/\text{TAP}_{min}$ range check still fails, consider setting VWDGD = OFF, directly setting the TAP quantities within range, and desensitizing the O87P setting.

Restraint Slope 2 Percentage (OFF, 50–200%) SLP2 = 100

Restraint Slope 1 Limit, multiple of TAP (1.0–16.0) IRS1 = 3.0

Second Harmonic Blocking Percent (OFF, 5–100%) PCT2 = 12

Independent Harmonic Blocking (Y, N) IHBL = N

The SLP2 and IRS1 settings define the second percentage restraint slope. As shown in Figure 13.8, the SLP2 slope is effective when the measured restraint current is greater than IRS1 times TAP. If a second slope is not desired, set SLP2 = OFF. When SLP2 = OFF, the relay hides the IRS1 setting and does not require that you enter a value.

The PCT2 setting defines a second-harmonic blocking percentage. In the majority of unit protection applications, setting PCT2 to OFF or 12 percent will provide satisfactory performance.

When PCT2 = OFF, the IHBL setting is hidden and does not require a value.

Restrained Element Block (SELOGIC control equation) 87B = 0

The percentage restrained differential element is disabled when the 87B SELOGIC control equation result is a logical 1. When the differential element is applied for unit protection, you may wish to set 87B = 24C2. This blocks the differential element during overexcitation conditions when fifth-harmonic current might cause the differential element to incorrectly pick up.

Setting Calculation

Transformer High-Side Line-to-Line Voltage, VWDGD

The VWDGD setting is used to derive the TAPD value. When a generator step-up transformer is included in the differential zone, set VWDGD equal to the transformer rated high-side voltage in

line-to-line kilovolts. If you are setting E87 = T, but not including a power transformer in the differential zone, either set VWDGD equal to the generator rate line-to-line voltage or set VWDGD = OFF. When VWDGD = OFF, the TAP1 and TAPD settings must be calculated and entered manually, as discussed below.

Transformer and CT Connection Settings, TRCON and CTCON

The TRCON setting is defined by the generator step-up transformer connections. The setting represents both windings. For instance, TRCON = DABY indicates that the transformer winding connected to the generator is delta connected and the high side is wye connected. ***Appendix H: Differential Connection Diagrams*** shows the transformer connections associated with each of the available TRCON settings.

The CTCON setting is defined by the 87 input current transformer connection. CTCON = Y indicates the current transformers are wye connected. CTCON = DAB indicates that the current transformers are delta connected, with the polarity of the A-phase CT connected to the nonpolarity side of the B-phase CT. CTCON = DAC indicates that the current transformers are delta connected, with the polarity of the A-phase CT connected to the nonpolarity side of the C-phase CT. See ***Appendix H: Differential Connection Diagrams*** for example connection diagrams.

Derived Tap Settings, TAP1, TAPD

When E87 = T and VWDGD is not OFF, the relay derives the values of TAP1 and TAPD. TAP1 automatically is set equal to the generator nominal current in secondary amps, defined by the INOM setting. TAPD is set equal to the same current, placed in terms of secondary amps at the differential input CTs, taking into account the power transformer ratio and connections and the current transformer ratios and connections:

$$\text{TAPD} = \frac{\text{VNOM} \bullet \text{INOM} \bullet \text{PTR} \bullet \text{CTR} \bullet \text{C2}}{1000 \bullet \text{VWDGD} \bullet \text{CTRD}} \text{ A}$$

where:

VNOM, INOM,	
PTR, CTR,	
VWDGD,	
CTRD	= relay settings
C2	= 1.732 if CTCON = DAB or DAC
C2	= 1.0 for all other combinations of TRCON and CTCON

The relay requires that the ratio of the maximum TAP to the minimum TAP be less than 7.5:1 which is feasible for the vast majority of applications. If your particular application calls for a higher ratio of TAP_{max} to TAP_{min}, take one of the following remedial actions to lower the TAP ratio:

1. Select a different current transformer ratio for either the phase or 87 input current transformers.
2. Use an auxiliary current transformer in secondary circuits of the 87 input current transformers to modify the current transformer ratio apparent to the SEL-300G.
3. Set VWDGD = OFF then manually set TAP1 and TAPD to values that are close—but not equal—to the ideal derived values. These nonideal TAP values must still meet the

7.5:1 ratio criteria. Because they are not ideal, they will result in nonzero mismatch in the relay differential element. This will require that you select higher values for O87P, SLP1, and SLP2 to maintain security during through-faults.

Unrestrained Differential Element Pickup Setting, U87P

The instantaneous, unrestrained differential element is intended to detect very high difference currents that clearly indicate an internal fault. This element responds only to the fundamental frequency component of the differential operate current and is not affected by the percentage restraint function. It should be set high enough to not respond to false difference current caused by differences in CT performance for heavy through-faults. Setting U87P = 10 generally provides satisfactory performance.

Note that the relay requires the following inequality be true:

$$U87P \bullet TAP_{max} \leq 32 \bullet In$$

where:

In	= 1 A or 5 A rating of the relay phase current inputs
TAP_{max}	is the larger of TAP1 or TAPD

Restrained Differential Element Pickup Setting, O87P

Set the restrained element operate current pickup, O87P, at a lower value for increased sensitivity but high enough to avoid incorrect operation caused by steady-state CT error. Figure 13.8 shows that the O87P setting determines the minimum amount that the operate current must exceed the restraint current to cause a restrained differential trip. If the current transformers on either side of the generator are sufficiently mismatched, then it may be possible that load current or a low-level external fault will produce enough operate current to cause a trip with O87P set at its minimum value.

The term “matched CTs” is commonly used to describe current transformers that have the same construction type, ratio, accuracy class, and manufacturer. If the six differential CTs are “matched,” then an O87P setting below 0.3 may be adequate. If the six differential CTs do not meet the definition of “matched,” then an O87P setting of 0.3 or higher should be considered to provide secure performance.

The MET DIF command, which displays operate currents in percent of the respective restraint currents, may be used with the generator at or near full load to help determine an optimum O87P setting. Start with a secure O87P setting, and use the results from multiple MET DIF commands to adjust the setting.

Note that the relay requires the following inequality be true:

$$O87P \bullet TAP_{min} \geq 0.04 \bullet In$$

where:

In =	1 A or 5 A rating of the relay phase current inputs
TAP_{min}	is the smaller of TAP1 or TAPD

Restrained Differential Element Slope 1 Setting, SLP1

The sensitive differential element percentage restraint characteristic improves the element security during heavy through-faults. During the external fault, the CT ratio errors may increase, causing the relay to measure differential current. To prevent incorrect operation during this condition, the relay automatically increases the required operate current in direct proportion to the measured restraint current by a settable amount, SLP1.

If the CT error for each of the two CTs is ±10 percent, and the relay differential measurement error is ≤5 percent, then the minimum SLP1 setting is 25 percent.

Percentage Restraint Slope 2 Settings, SLP2, IRS1

When E87 = T, you may enter settings for SLP2 and IRS1. Setting IRS1 = 3 per unit of TAP and SLP2 = 60 percent to 100 percent provide restrained element security for deteriorating CT performance during high-current external faults. Higher values of SLP2 provide security for some degree of CT saturation. If you set SLP2 = OFF, the IRS1 setting is hidden and the SLP1 setting is applied to the entire range of differential element operation and should be higher than discussed above to provide security during high-current through-faults.

Second-Harmonic Blocking Settings, PCT2, IHBL

The PCT2 setting defines the restrained element second-harmonic blocking level. Setting PCT2 = OFF disables second-harmonic blocking and the relay hides the IHBL setting.

When PCT2 is not set to OFF, if the differential current contains more than PCT2 percent of second harmonic due to magnetizing inrush or CT saturation, the restrained differential element is blocked. The unrestrained element is not affected. In transformer differential applications, the traditional PCT2 setting is 12 percent to 15 percent to provide security during transformer magnetizing inrush conditions. In the majority of unit protection applications, setting PCT2 to OFF or 12 percent will provide satisfactory performance.

When PCT2 is not set to OFF, the IHBL setting offers two ways to perform harmonic blocking:

1. Common Harmonic Blocking (IHBL = N) blocks all of the percentage differential elements if any one phase has a second-harmonic magnitude above the PCT2 threshold (see Figure 13.6).

2. Independent Harmonic Blocking (IHBL = Y) blocks the percentage differential element for a particular phase if the second harmonic in that phase is above the PCT2 threshold. The other two differential elements are blocked by their own second-harmonic measurement only (see Figure 13.7).

Set IHBL = N in the majority of applications to improve the restrained element security.

Differential Element Tripping

The 87U and 87R differential elements detect faults and usually are used to trip the main generator breaker, the field breaker, the prime, and the generator lockout relay. Refer to ***Section 4: SELOGIC Control Equations*** for more detail and examples of tripping SELOGIC control equations.

DIFFERENTIAL ELEMENT TRANSFORMER CONNECTION AND RATIO COMPENSATION

Figure 13.3 shows that the relay performs compensation on the measured phase currents before performing any other differential element calculations. TAP compensation accounts for CT and power transformer ratios, and, partially, for the CT and transformer connections. Additional phase-shift compensation is needed for certain combinations of CT and transformer connection. Table 13.1 and the following discussion fully define the Connection and TAP Compensation referred to in Figure 13.3.

Table 13.1: Connection and TAP Compensation

TRCON	CTCON	CON1	CON2
GEN	Y	Y	Y
DACDAC	Y	Y	Y
DABDAB	Y	Y	Y
DABY	DAB	Y	Y
DACY	DAC	Y	Y
YY	Y	DAB	DAB
YDAC	Y	DAC	Y
YDAB	Y	DAB	Y
DABY	Y	Y	DAB
DACY	Y	Y	DAC

For CON1 = Y:

I1W1F1 = IA1/TAP1
I2W1F1 = IB1/TAP1
I3W1F1 = IC1/TAP1

For CON1 = DAB:

$$I1W1F1 = \frac{IA1 - IB1}{\sqrt{3} \bullet TAP1}$$

$$I2W1F1 = \frac{IB1 - IC1}{\sqrt{3} \bullet TAP1}$$

$$I3W1F1 = \frac{IC1 - IA1}{\sqrt{3} \bullet TAP1}$$

For CON2 = Y:

I187F1 = IA871/TAPD
I287F1 = IB871/TAPD
I387F1 = IC871/TAPD

For CON2 = DAB:

$$I187F1 = \frac{IA871 - IB871}{\sqrt{3} \bullet TAPD}$$

$$I287F1 = \frac{IB871 - IC871}{\sqrt{3} \bullet TAPD}$$

$$I387F1 = \frac{IC871 - IA871}{\sqrt{3} \bullet TAPD}$$

For CON1 = DAC:

$$I1W1F1 = \frac{IA1 - IC1}{\sqrt{3} \bullet TAP1}$$

$$I2W1F1 = \frac{IB1 - IA1}{\sqrt{3} \bullet TAP1}$$

$$I3W1F1 = \frac{IC1 - IB1}{\sqrt{3} \bullet TAP1}$$

For CON2 = DAC:

$$I187F1 = \frac{IA871 - IC871}{\sqrt{3} \bullet TAPD}$$

$$I287F1 = \frac{IB871 - IA871}{\sqrt{3} \bullet TAPD}$$

$$I387F1 = \frac{IC871 - IB871}{\sqrt{3} \bullet TAPD}$$

TAP and connection compensation for the second-harmonic currents is similar.

RESTRAINED DIFFERENTIAL ELEMENT OPERATING CHARACTERISTICS

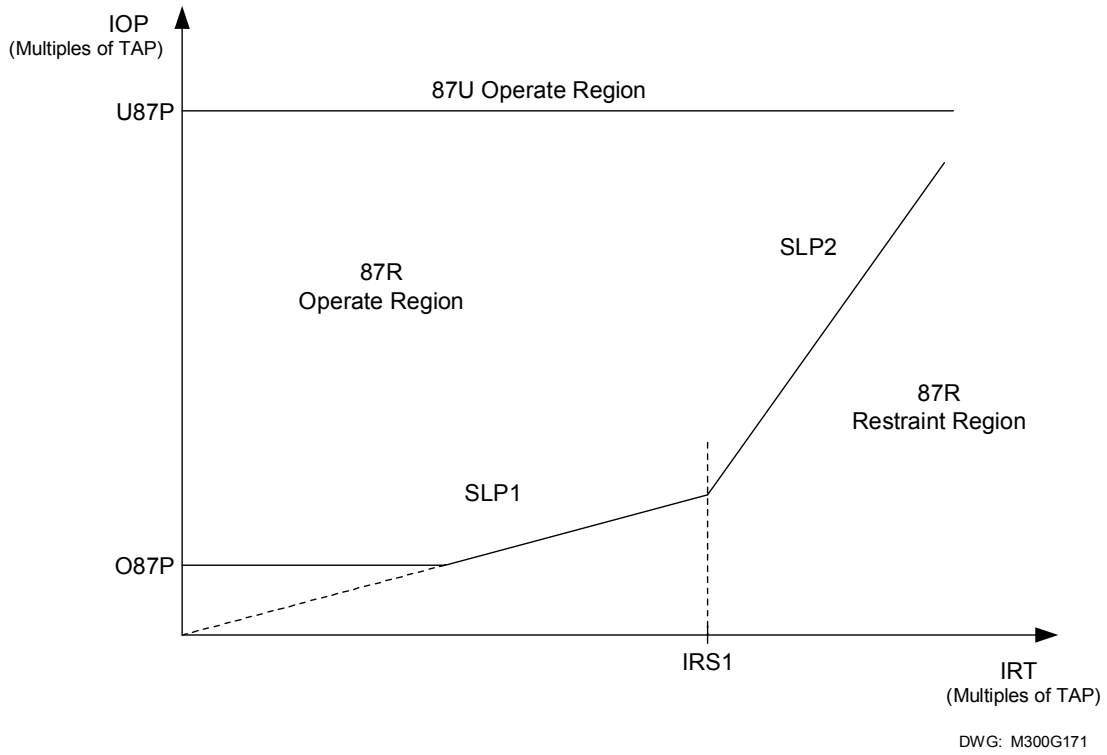

Figure 13.8: Differential Element Operating Characteristics

TABLE OF CONTENTS

APPENDIX A: FIRMWARE AND MANUAL VERSIONS A-1

Firmware Versions A-1
Instruction Manual A-12

APPENDIX B: FIRMWARE UPGRADE INSTRUCTIONS B-1

Overview B-1
Relay Firmware Upgrade Instructions B-1
    Introduction B-1
    Upgrade Procedure B-2
Ethernet Port Firmware Upgrade Instructions B-19
    Introduction B-19
    Upgrade Procedure B-20
Factory Assistance B-23

APPENDIX C: SEL DISTRIBUTED PORT SWITCH PROTOCOL (LMD) C-1

Settings C-1
Operation C-1

APPENDIX D: CONFIGURATION, *FAST METER*, AND *FAST OPERATE* COMMANDS D-1

Introduction D-1
Message Lists D-1
    Binary Message List D-1
    ASCII Configuration Message List D-1
Message Definitions D-2
    A5C0 Relay Definition Block D-2
    A5C1 *Fast Meter* Configuration Block D-2
    A5D1 *Fast Meter* Data Block D-11
    A5C2/A5C3 Demand/Peak Demand *Fast Meter* Configuration Messages D-12
    A5D2/A5D3 Demand/Peak Demand *Fast Meter* Message D-15
    A5B9 *Fast Meter* Status Acknowledge Message D-15
    A5CE *Fast Operate* Configuration Block D-15
    A5E0 *Fast Operate* Remote Bit Control D-16
    A5E3 *Fast Operate* Breaker Control D-17
    ID Message D-18
    DNA Message D-18
    BNA Message D-20

APPENDIX E: COMPRESSED ASCII COMMANDS E-1

Introduction E-1
CASCII Command—General Format.....E-1
CASCII Command—SEL-300G E-2
CSTATUS Command—SEL-300G.....E-7
CHISTORY Command—SEL-300G.....E-9
CEVENT Command—SEL-300G.....E-9

APPENDIX F: MODBUS RTU COMMUNICATIONS PROTOCOL F-1

Introduction F-1
Modbus RTU Communications Protocol F-1
Modbus Queries F-1
Modbus Responses F-2
Supported Modbus Function Codes F-2
Modbus Exception Responses.....F-2
Cyclical Redundancy Check F-3
01h Read Coil Status Command F-3
02h Read Input Status Command.....F-4
03h Read Holding Register Command.....F-6
04h Read Input Registers Command.....F-7
05h Force Single Coil Command F-8
06h Preset Single Register Command F-10
07h Read Exception Status Command F-10
08h Loopback Diagnostic Command F-11
10h Preset Multiple Registers Command F-12
64h Scattered Register Read F-13
Controlling Output Contacts and Remote Bits Using Modbus F-14
Error Codes F-16
Reading Event Data Using Modbus F-16
Reading History Data Using Modbus.....F-18

APPENDIX G: ACSELERATOR QUICKSET SEL-5030 SOFTWARE G-1

Overview G-1
The ACSELERATOR QuickSet System Requirements: G-1
Installation G-1
Starting the ACSELERATOR QuickSet Software G-2

APPENDIX H: DIFFERENTIAL CONNECTION DIAGRAMS H-1

APPENDIX I: UNSOLICITED FAST SER PROTOCOL I-1

Introduction I-1
Make Sequential Events Recorder (SER) Settings With Care I-1
Recommended Message Usage I-1
Functions and Function Codes I-2
01—Function Code: Enable Unsolicited Fast SER Data Transfer, Sent From Master to Relay I-2
02—Function Code: Disable Unsolicited Fast SER Data Transfer, Sent From Master to Relay I-3
18—Function: Unsolicited Fast SER Response, Sent From Relay to Master I-3
Acknowledge Message Sent From Master to Relay, and From Relay to Master I-5

TABLES

Table A.1: Firmware Versions A-2
Table A.2: Instruction Manual Versions A-12
Table 1: Troubleshooting New Firmware Upload B-15
Table F.1: Modbus Query Fields F-1
Table F.2: SEL-300G Relay Modbus Function Codes F-2
Table F.3: SEL-300G Relay Modbus Exception Codes F-2
Table F.4: 01h Read Coil Status Commands F-3
Table F.5: SEL-300G Relay Command Coils (FC01h) F-4
Table F.6: 02h Read Input Status Command F-4
Table F.7: SEL-300G Relay Inputs F-5
Table F.8: 03h Read Holding Register Command F-7
Table F.9: 04h Read Holding Register Command F-7
Table F.10: 05h Force Single Coil Command F-8
Table F.11: SEL-300G Relay Command Coils (FC05h) F-9
Table F.12: 06h Preset Single Register Command F-10
Table F.13: 07h Read Exception Status Command F-11
Table F.14: 08h Loopback Diagnostic Command F-12
Table F.15: 10h Preset Multiple Registers Command F-12
Table F.16: 64h Scattered Register Read Command F-13
Table F.17: SEL-300G Relay Modbus Command Region F-14
Table F.18: Modbus Command Codes F-15
Table F.19: Assign Event Report Channel Using Address 02D2 ..... F-17
Table F.20: Modbus Register Map F-19
Table I.1: Function Code 01 Message Format I-2

Table I.2: Function Code 02 Message Format I-3
Table I.3: Function Code 18 Message Format I-4
Table I.4: Message Format for Lost SER Records I-5
Table I.5: Acknowledge Message Format I-6
Table I.6: Supported Response Codes I-6

FIGURES

Figure 1: Establishing a Connection B-3
Figure 2: Determining the Computer Serial Port B-4
Figure 3: Determining Communications Parameters for the Computer B-4
Figure 4: Setting Terminal Emulation B-5
Figure 5: Terminal Emulation Startup Prompt B-5
Figure 6: Correcting the Port Setting B-6
Figure 7: Correcting the Communications Parameters B-7
Figure 8: Preparing HyperTerminal for ID Command Display B-9
Figure 9: List of Commands Available in SELBOOT B-10
Figure 10: Matching Computer to Relay Parameters B-11
Figure 11: Example Receive File Dialog Box B-11
Figure 12: Example Filename Identifying Old Firmware Version B-12
Figure 13: Downloading Old Firmware B-12
Figure 14: Selecting New Firmware to Send to the Relay B-14
Figure 15: Transferring New Firmware to the Relay B-14
Figure 16: Preparing HyperTerminal for ID Command Display B-18
Figure H.1: Protected Generator With No Step-Up Transformer H-1
Figure H.2: Delta-Wye Power Transformer With Wye High-Side CT Connections H-1
Figure H.3: Delta-Wye Power Transformer With Wye High-Side CT Connections H-2
Figure H.4: Delta-Wye Power Transformer With Delta High-Side CT Connections H-2
Figure H.5: Delta-Wye Power Transformer With Delta High-Side CT Connections H-3
Figure H.6: Delta-Delta Power Transformer With Wye High-Side CT Connections H-3
Figure H.7: Delta-Delta Power Transformer With Wye High-Side Connections H-4
Figure H.8: Wye-Delta Power Transformer With Wye High-Side Connections H-4
Figure H.9: Wye-Delta Power Transformer With Wye High-Side Connections H-5
Figure H.10: Wye-Wye Power Transformer With Wye High-Side CT Connections H-5

APPENDIX A: FIRMWARE AND MANUAL VERSIONS

FIRMWARE VERSIONS

To find the firmware revision number in your relay, view the status report using the serial port STATUS command or the front-panel STATUS pushbutton. For firmware versions prior to April 7, 2000, the status report displays the Firmware Identification (FID) label:

FID=**SEL-300G-Rxxx-Vxxxxxxxxxx-Dxxxxxx**

For firmware versions with the date code of April 7, 2000, or later, the FID label will appear as follows with the Part/Revision number in bold:

FID=**SEL-300G-Rxxx-Vxxxxxxxxxx-Zxxxxxx-Dxxxxxxxx**

The firmware revision number is after the "R" and the release date is after the "D". The string of *x*s after "SEL-300G" is the firmware part number and depends on the features ordered with the relay (refer to the ***SEL-300G Model Option Tables***. Model Option Tables can be obtained from the factory or from our website www.selinc.com).

For example:

FID=**SEL-300G-R204-V00H425XX4X-Z001001-D20000407**

is firmware revision number 204, base generator protection, 8 outputs, 125/250 V power supply, wye or delta, 5 A CTs, 125 Vdc control inputs, release date April 7, 2000.

Table A.1 lists the firmware versions, a description of modifications, and the instruction manual date code that corresponds to firmware versions. The most recent firmware version is listed first.

Table A.1: Firmware Versions

Firmware Part/Revision No.	Description of Firmware	Manual Date Code
SEL-300G-R326-Z302302-D20081231	Model SEL-0300G30 Seventeenth Revision. Model SEL-0300G31 Seventeenth Revision. Model SEL-0300G20 Seventeenth Revision. Model SEL-0300G21 Seventeenth Revision. Model SEL-0300G10 Seventeenth Revision. Model SEL-0300G11 Seventeenth Revision. Model SEL-0300G00 Eighteenth Revision. Model SEL-0300G01 Eighteenth Revision. Model SEL-0300G3W Twelfth Revision. Model SEL-0300G3Y Twelfth Revision. Model SEL-0300G2W Twelfth Revision. Model SEL-0300G2Y Twelfth Revision. Model SEL-0300G1W Twelfth Revision. Model SEL-0300G1Y Twelfth Revision. Model SEL-0300G0W Twelfth Revision. Model SEL-0300G0Y Twelfth Revision. —Revised LOP element to be the same as before (R208 and lower) by removing “V1 < 5V for 1 minute“ logic. —Moved Phase Rotation setting PHROT from GLOBAL to GROUP settings. —Added settings for RTD1-RTD12 and Field Ground Insulation-Resistance Rf to the front-panel rotating display settings.	20081231
SEL-300G- R242-Z200200-D20081231	Model SEL-0300G30 Twelfth Revision. Model SEL-0300G31 Twelfth Revision. Model SEL-0300G20 Twelfth Revision. Model SEL-0300G21 Twelfth Revision. Model SEL-0300G10 Twelfth Revision. Model SEL-0300G11 Twelfth Revision. Model SEL-0300G00 Thirteenth Revision. Model SEL-0300G01 Thirteenth Revision. Model SEL-0300G3W Seventh Revision. Model SEL-0300G3Y Seventh Revision. Model SEL-0300G2W Seventh Revision. Model SEL-0300G2Y Seventh Revision. Model SEL-0300G1W Seventh Revision. Model SEL-0300G1Y Seventh Revision. Model SEL-0300G0W Seventh Revision. Model SEL-0300G0Y Seventh Revision. —Revised LOP element to be the same as before (R208 and lower) by removing “V1 < 5V for 1 minute“ logic.	20081231

Firmware Part/Revision No.	Description of Firmware	Manual Date Code
SEL-300G-R325-Z301302-D20070607	Model SEL-0300G30 Sixteenth Revision. Model SEL-0300G31 Sixteenth Revision. Model SEL-0300G20 Sixteenth Revision. Model SEL-0300G21 Sixteenth Revision. Model SEL-0300G10 Sixteenth Revision. Model SEL-0300G11 Sixteenth Revision. Model SEL-0300G00 Seventeenth Revision. Model SEL-0300G01 Seventeenth Revision. Model SEL-0300G3W Eleventh Revision. Model SEL-0300G3Y Eleventh Revision. Model SEL-0300G2W Eleventh Revision. Model SEL-0300G2Y Eleventh Revision. Model SEL-0300G1W Eleventh Revision. Model SEL-0300G1Y Eleventh Revision. Model SEL-0300G0W Eleventh Revision. Model SEL-0300G0Y Eleventh Revision. —Added Unsolicited Fast SER Protocol. —Improved RTDFLT alarm processing, when an SEL-2600 series RTD module is used, by eliminating nuisance alarm chattering.	20070607
SEL-300G-R324-Z301301-D20060731	Model SEL-0300G30 Fifteenth Revision. Model SEL-0300G31 Fifteenth Revision. Model SEL-0300G20 Fifteenth Revision. Model SEL-0300G21 Fifteenth Revision. Model SEL-0300G10 Fifteenth Revision. Model SEL-0300G11 Fifteenth Revision. Model SEL-0300G00 Sixteenth Revision. Model SEL-0300G01 Sixteenth Revision. Model SEL-0300G3W Tenth Revision. Model SEL-0300G3Y Tenth Revision. Model SEL-0300G2W Tenth Revision. Model SEL-0300G2Y Tenth Revision. Model SEL-0300G1W Tenth Revision. Model SEL-0300G1Y Tenth Revision. Model SEL-0300G0W Tenth Revision. Model SEL-0300G0Y Tenth Revision. —Improved 51V sensitivity by adding voltage measurement phase compensation introduced by delta-wye step-up transformers. —No settings changes.	20060731

Firmware Part/Revision No.	Description of Firmware	Manual Date Code
SEL-300G-R323-Z301301-D20060508	Model SEL-0300G30 Fourteenth Revision. Model SEL-0300G31 Fourteenth Revision. Model SEL-0300G20 Fourteenth Revision. Model SEL-0300G21 Fourteenth Revision. Model SEL-0300G10 Fourteenth Revision. Model SEL-0300G11 Fourteenth Revision. Model SEL-0300G00 Fifteenth Revision. Model SEL-0300G01 Fifteenth Revision. Model SEL-0300G3W Ninth Revision. Model SEL-0300G3Y Ninth Revision. Model SEL-0300G2W Ninth Revision. Model SEL-0300G2Y Ninth Revision. Model SEL-0300G1W Ninth Revision. Model SEL-0300G1Y Ninth Revision. Model SEL-0300G0W Ninth Revision. Model SEL-0300G0Y Ninth Revision. —Added new Field Ground Protection Element (64F) and related changes (requires SEL-2664). —Added new settings for the 64F element.	20060508
SEL-300G-R322-Z300300-D20041019	Model SEL-0300G30 Thirteenth Revision. Model SEL-0300G31 Thirteenth Revision. Model SEL-0300G20 Thirteenth Revision. Model SEL-0300G21 Thirteenth Revision. Model SEL-0300G10 Thirteenth Revision. Model SEL-0300G11 Thirteenth Revision. Model SEL-0300G00 Fourteenth Revision. Model SEL-0300G01 Fourteenth Revision. Model SEL-0300G3W Eighth Revision. Model SEL-0300G3Y Eighth Revision. Model SEL-0300G2W Eighth Revision. Model SEL-0300G2Y Eighth Revision. Model SEL-0300G1W Eighth Revision. Model SEL-0300G1Y Eighth Revision. Model SEL-0300G0W Eighth Revision. Model SEL-0300G0Y Eighth Revision. —Two-wire EIA-485 Modbus communications improvements. —No Settings Changes.	20041019

Firmware Part/Revision No.	Description of Firmware	Manual Date Code
SEL-300G-R321-Z300300-D20040903	Model SEL-0300G30 Twelfth Revision. Model SEL-0300G31 Twelfth Revision. Model SEL-0300G20 Twelfth Revision. Model SEL-0300G21 Twelfth Revision. Model SEL-0300G10 Twelfth Revision. Model SEL-0300G11 Twelfth Revision. Model SEL-0300G00 Thirteenth Revision. Model SEL-0300G01 Thirteenth Revision. Model SEL-0300G3W Seventh Revision. Model SEL-0300G3Y Seventh Revision. Model SEL-0300G2W Seventh Revision. Model SEL-0300G2Y Seventh Revision. Model SEL-0300G1W Seventh Revision. Model SEL-0300G1Y Seventh Revision. Model SEL-0300G0W Seventh Revision. Model SEL-0300G0Y Seventh Revision. —Improved Settings File Transfer. —Improved Serial Port Time-Out Logic. —No Settings Changes.	20040903
SEL-300G-R241-Z200200-D20040903	Model SEL-0300G30 Eleventh Revision. Model SEL-0300G31 Eleventh Revision. Model SEL-0300G20 Eleventh Revision. Model SEL-0300G21 Eleventh Revision. Model SEL-0300G10 Eleventh Revision. Model SEL-0300G11 Eleventh Revision. Model SEL-0300G00 Twelfth Revision. Model SEL-0300G01 Twelfth Revision. Model SEL-0300G3W Sixth Revision. Model SEL-0300G3Y Sixth Revision. Model SEL-0300G2W Sixth Revision. Model SEL-0300G2Y Sixth Revision. Model SEL-0300G1W Sixth Revision. Model SEL-0300G1Y Sixth Revision. Model SEL-0300G0W Sixth Revision. Model SEL-0300G0Y Sixth Revision. —Improved Settings File Transfer. —Improved Serial Port Time-Out Logic. —No Settings Changes.	20040903

Firmware Part/Revision No.	Description of Firmware	Manual Date Code
SEL-300G-R320-Z300300-D20040607	Model SEL-0300G30 Eleventh Revision. Model SEL-0300G31 Eleventh Revision. Model SEL-0300G20 Eleventh Revision. Model SEL-0300G21 Eleventh Revision. Model SEL-0300G10 Eleventh Revision. Model SEL-0300G11 Eleventh Revision. Model SEL-0300G00 Twelfth Revision. Model SEL-0300G01 Twelfth Revision. Model SEL-0300G3W Sixth Revision. Model SEL-0300G3Y Sixth Revision. Model SEL-0300G2W Sixth Revision. Model SEL-0300G2Y Sixth Revision. Model SEL-0300G1W Sixth Revision. Model SEL-0300G1Y Sixth Revision. Model SEL-0300G0W Sixth Revision. Model SEL-0300G0Y Sixth Revision. —Added File Transfer Capability for SEL-5030. —Increased PTR Resolution. —Increased CTR and CTRD Range. —Increased VNOM Range for Y Connected PT. —Enhance 51VC Element (added new setting, 51VCA). —Added EVE GND and SEC Reports. —Added Energy Meter Rollover. —Extended INOM Range. —Meter Report Enhancement. —Added New Relay Word Bits for RTD and 64G Element. —Mho Distance Element Improvement (settings change–eliminated multiplier of 3). —Added Compensator Distance Element. —Added 60 and 180 Cycles Event Report. —Corrected the report header versus data discrepancy in the CEV DIF report.	20040607

Firmware Part/Revision No.	Description of Firmware	Manual Date Code
SEL-300G-R240-Z200200-D20040607	Model SEL-0300G30 Tenth Revision. Model SEL-0300G31 Tenth Revision. Model SEL-0300G20 Tenth Revision. Model SEL-0300G21 Tenth Revision. Model SEL-0300G10 Tenth Revision. Model SEL-0300G11 Tenth Revision. Model SEL-0300G00 Eleventh Revision. Model SEL-0300G01 Eleventh Revision. Model SEL-0300G3W Fifth Revision. Model SEL-0300G3Y Fifth Revision. Model SEL-0300G2W Fifth Revision. Model SEL-0300G2Y Fifth Revision. Model SEL-0300G1W Fifth Revision. Model SEL-0300G1Y Fifth Revision. Model SEL-0300G0W Fifth Revision. Model SEL-0300G0Y Fifth Revision. —Added File Transfer Capability for SEL-5030. —Increased PTR Resolution. —Increased CTR and CTRD Range. —Increased VNOM Range for Y Connected PT. —Enhance 51VC Element (added new setting, 51VCA). —Added EVE GND and SEC Reports. —Added Energy Meter Rollover. —Extended INOM Range. —Meter Report Enhancement. —Added New Relay Word Bits for RTD and 64G Element. —Mho Distance Element Improvement (settings change–eliminated multiplier of 3). —Corrected the report header versus data discrepancy in the CEV DIF report.	20040607
SEL-300G-R300-Z005004-D20020206	Model SEL-0300G30 Tenth Revision. Model SEL-0300G31 Tenth Revision. Model SEL-0300G20 Tenth Revision. Model SEL-0300G21 Tenth Revision. Model SEL-0300G10 Tenth Revision. Model SEL-0300G11 Tenth Revision. Model SEL-0300G00 Eleventh Revision. Model SEL-0300G01 Eleventh Revision. Model SEL-0300G3W Fifth Revision. Model SEL-0300G3Y Fifth Revision. Model SEL-0300G2W Fifth Revision. Model SEL-0300G2Y Fifth Revision. Model SEL-0300G1W Fifth Revision. Model SEL-0300G1Y Fifth Revision. Model SEL-0300G0W Fifth Revision. Model SEL-0300G0Y Fifth Revision. —Added support for faster CPU. —Added Modbus® RTU protocol.	20020206

Firmware Part/Revision No.	Description of Firmware	Manual Date Code
SEL-300G-R208-Z004003-D20011003	Model SEL-0300G30 Ninth Revision. Model SEL-0300G31 Ninth Revision. Model SEL-0300G20 Ninth Revision. Model SEL-0300G21 Ninth Revision. Model SEL-0300G10 Ninth Revision. Model SEL-0300G11 Ninth Revision. Model SEL-0300G00 Tenth Revision. Model SEL-0300G01 Tenth Revision. Model SEL-0300G3W Fourth Revision. Model SEL-0300G3Y Fourth Revision. Model SEL-0300G2W Fourth Revision. Model SEL-0300G2Y Fourth Revision. Model SEL-0300G1W Fourth Revision. Model SEL-0300G1Y Fourth Revision. Model SEL-0300G0W Fourth Revision. Model SEL-0300G0Y Fourth Revision. —Corrected setting interdependency checks of Local Bit Settings.	20011003
SEL-300G-R207-Z004003-D20010615	Manual update only. See Table A.2 for a summary of updates.	20010824
SEL-300G-R207-Z004003-D20010615	Model SEL-0300G30 Eighth Revision. Model SEL-0300G31 Eighth Revision. Model SEL-0300G20 Eighth Revision. Model SEL-0300G21 Eighth Revision. Model SEL-0300G10 Eighth Revision. Model SEL-0300G11 Eighth Revision. Model SEL-0300G00 Ninth Revision. Model SEL-0300G01 Ninth Revision. Model SEL-0300G3W Third Revision. Model SEL-0300G3Y Third Revision. Model SEL-0300G2W Third Revision. Model SEL-0300G2Y Third Revision. Model SEL-0300G1W Third Revision. Model SEL-0300G1Y Third Revision. Model SEL-0300G0W Third Revision. Model SEL-0300G0Y Third Revision. —Increased CTR and CTRD setting range to 1-30000 for 1 A version relays. —Corrected 87N element to prevent potential unreliable operations. —Corrected ability to set RTD, 32, and 25 elements from front panel.	20010615

Firmware Part/Revision No.	Description of Firmware	Manual Date Code
SEL-300G-R206-Z003003-D20001212	Model SEL-0300G30 Seventh Revision. Model SEL-0300G31 Seventh Revision. Model SEL-0300G20 Seventh Revision. Model SEL-0300G21 Seventh Revision. Model SEL-0300G10 Seventh Revision. Model SEL-0300G11 Seventh Revision. Model SEL-0300G00 Eighth Revision. Model SEL-0300G01 Eighth Revision. Model SEL-0300G3W Second Revision. Model SEL-0300G3Y Second Revision. Model SEL-0300G2W Second Revision. Model SEL-0300G2Y Second Revision. Model SEL-0300G1W Second Revision. Model SEL-0300G1Y Second Revision. Model SEL-0300G0W Second Revision. Model SEL-0300G0Y Second Revision. —Added compatibility with SEL-2600. —Added thermal elements. —Add thermal metering. —Allow TRGTR to be in SER. —Improve frequency metering display. —Improve current meter display accuracy at low levels. —Increase 25RCF setting to range 0.5-2.000.	20001212
SEL-300G-R205-Z002002-D20000616	Model SEL-0300G30 Sixth Revision. Model SEL-0300G31 Sixth Revision. Model SEL-0300G20 Sixth Revision. Model SEL-0300G21 Sixth Revision. Model SEL-0300G10 Sixth Revision. Model SEL-0300G11 Sixth Revision. Model SEL-0300G00 Seventh Revision. Model SEL-0300G01 Seventh Revision. Model SEL-0300G3W First Revision. Model SEL-0300G3Y First Revision. Model SEL-0300G2W First Revision. Model SEL-0300G2Y First Revision. Model SEL-0300G1W First Revision. Model SEL-0300G1Y First Revision. Model SEL-0300G0W First Revision. Model SEL-0300G0Y First Revision. —Display points increased from 8 to 16. —Remote, latch, and local bits increased from 8 to 16. —Revised miscellaneous items to improve the performance of the relay. —Added Out-of-Step Element (78). —Added Connectorized Versions 0300G_W and 0300G_Y. —Added 110 Vdc Control Power. —Modified FID String Format.	20000616
SEL-300G-R203-D000218	Manual update only. See Table A.2 for a summary of manual updates.	20000615

Firmware Part/Revision No.	Description of Firmware	Manual Date Code
SEL-300G-R203-D000218	Model SEL-0300G30 Fourth Revision. Model SEL-0300G31 Fourth Revision. Model SEL-0300G20 Fourth Revision. Model SEL-0300G21 Fourth Revision. —Corrected potential misoperation of synchronization check element at slip frequencies close to zero.	20000218
SEL-300G-R202-D990510	Model SEL-0300G30 Third Revision. Model SEL-0300G31 Third Revision. Model SEL-0300G20 Third Revision. Model SEL-0300G21 Third Revision. Model SEL-0300G10 Fourth Revision. Model SEL-0300G11 Fourth Revision. Model SEL-0300G00 Fifth Revision. Model SEL-0300G01 Fifth Revision. —Software maintenance: no performance modification.	19990421
SEL-300G-R201-D981204	Manual update only. See Table A.2 for a summary of manual updates.	19990312
SEL-300G-R201-D981204	Manual update only. See Table A.2 for a summary of manual updates.	19990115
SEL-300G-R201-D981204	Model SEL-0300G30 Second Revision. Model SEL-0300G31 Second Revision. Model SEL-0300G20 Second Revision. Model SEL-0300G21 Second Revision. Model SEL-0300G10 Third Revision. Model SEL-0300G11 Third Revision. Model SEL-0300G00 Fourth Revision. Model SEL-0300G01 Fourth Revision. —Corrected scaling error in directional power and phase distance elements - 1 A Models only. —Corrected positive-sequence impedance calculation for phase distance load encroachment function. —Corrected front-panel serial port setting baud rate range typographical error.	19981125
SEL-300G-R103-D981203	Model SEL-0300G10 Second Revision. Model SEL-0300G11 Second Revision. Model SEL-0300G00 Third Revision. Model SEL-0300G01 Third Revision. —Corrected scaling error in directional power elements—1 A Models only. —Corrected positive-sequence impedance calculation for phase distance load encroachment function. —Corrected front-panel serial port setting baud rate range typographical error.	19981125
SEL-300G-R200-D980721	Manual update only. See Table A.2 for a summary of manual updates.	19980731

Firmware Part/Revision No.	Description of Firmware	Manual Date Code
SEL-300G-R200-D980721	Model SEL-0300G30 First Revision. Model SEL-0300G31 First Revision. Model SEL-0300G20 First Revision. Model SEL-0300G21 First Revision. Model SEL-0300G10 Second Revision. Model SEL-0300G11 Second Revision. Model SEL-0300G00 Third Revision. Model SEL-0300G01 Third Revision. —Created 0300G2, 0300G3. —Added open-delta PT support. —Added 27PP2 phase-phase undervoltage element. —Added two-zone phase distance element; made 21P, 51V, and 51C element application mutually exclusive. —Added 87N elements to 0300G0, 0300G2. —Removed 51P element from all models. —Added single-phase overcurrent elements to 0300G1, 0300G3.	19980717
SEL-300G-R102-D980429	Model SEL-0300G10 First Revision. Model SEL-0300G11 First Revision. Model SEL-0300G00 Second Revision. Model SEL-0300G01 Second Revision. —Corrected problem with 40 Loss-of-Field element. —Corrected V1 and V2 Metering calculations for ACB rotation.	19980429
SEL-300G-R101-D980320	Manual update only. See Table A.2 for a summary of manual updates.	19980417
SEL-300G-R101-D980320	Model SEL-0300G10 Original Firmware Release. Model SEL-0300G11 Original Firmware Release. Model SEL-0300G00 First Revision. Model SEL-0300G01 First Revision. —Added differential elements, differential input overcurrent elements, and associated metering and event reporting functions. —Moved VNOM, INOM settings from Global to Group settings.	19980320

INSTRUCTION MANUAL

The date code at the bottom of each page of this manual reflects the creation or revision date.

Table A.2 lists the instruction manual release dates and a description of modifications. The most recent instruction manual revisions are listed at the top.

Table A.2: Instruction Manual Versions

Revision Date	Summary of Revisions
20081231	Section 2—Revised LOP logic and description, updated 64G2 setting recommendation, and moved phase rotation setting PHROT from GLOBAL to GROUP setting. Section 4—Added RTDs and Field Ground Resistance to rotating display. Section 6—Moved PHROT setting from GLOBAL to GROUP. Appendix A—Updated for firmware revision R242 and R326.
20070607	Section 2—Clarified method for calculating 64G element setting. Section 10—Updated for Unsolicited Fast SER Protocol addition. Appendix A—Updated for firmware revision R325. Appendix I—Added new appendix, Unsolicited Fast SER Protocol.
20060731	Section 2—Clarified negative, positive offset approaches. Section 4—Clarified language for 87 elements; added 51V voltage compensation. Section 13—Corrected equation in figure. Appendix A—Updated for firmware revision R324. Appendix B—Updated firmware upgrade instructions. Appendix F—Added that Event Summary Data requires Channel 16.
20060508	Section 1—Added Field Ground Protection (64F) element information. Section 2—Added Field Ground Protection (64F) element information. Section 4—Added new Relay Word bits. Section 5—Added SEL-2664 information. Setting Sheets—Added settings for the 64F element. Section 7—Added SEL-2664 information. Section 10—Expanded descriptions of commands. Appendix A—Updated for firmware revision R323. Appendix D—Added new information to 0000 Scale factor offset in Fast Meter message; added new information for the length and X Y components.
20041019	Section 1—Updated SEL-2600A fiber-optic cable information. Section 2—Improved 64G 100% Stator Ground Protection element recommendations. Setting Sheets—Updated port 1 RTSCTS setting information. Section 7—Updated 51V Commissioning Tests. Section 10—Miscellaneous edits. Section 11—Updated PUL and TRI command information on OUT201–OUT212. Appendix A—Updated firmware versions; updated instruction manual version table.
20040903	Section 4—Miscellaneous edits. Setting Sheets—Updated port time-out setting T_OUT setting information. Section 10—Added Command Summary. Appendix A—Updated firmware versions; updated instruction manual version table.

Revision Date	Summary of Revisions
20040607	Section 1—Deleted MOT information; updated specifications; miscellaneous edits. Section 2—Revised existing settings and descriptions; added new settings and Relay Word bit information. Section 3—Miscellaneous updates. Section 4—Added 27VSP setting; added new Relay Word bits; updated drawings. Section 5—Added mounting information; updated drawings. Section 6—Revised Introduction, Table 6.3, and Settings Sheets. Section 7—Miscellaneous edits for clarification. Section 8—Miscellaneous edits. Section 9—Miscellaneous edits. Section 10—Added CAS, CEV n, CHIS, CST, EVE SEC, and EVE GND commands. Section 11—Increased event report length; added new Relay Word bits. Section 12—Removed firmware upgrade instructions. Section 13—Miscellaneous edits. Appendix A—Updated firmware versions; added instruction manual revision history table. Appendix B—Created new Firmware Upgrade Instruction; relocated Differential Connection Diagrams to new Appendix H. Appendix D—Updated commands. Appendix E—Added new commands; updated others. Appendix F—Updated Modbus tables. Appendix G—Created new ACSELERATOR SEL-5030 Software appendix. Appendix H—Added former Appendix B: Differential Connection Diagrams.
20030225	Section 7—Corrected Figure 7.27.
20020206	Section 1—Added projection mount information, 220 Vdc optoisolated inputs, and miscellaneous changes. Section 2—Added references, corrected drawings, and clarified information. Section 3—Updated Alias Settings. Section 4—Miscellaneous updates. Section 5—Updated Figure 5.1. Section 6—Added Modbus settings and miscellaneous updates to Settings Sheets. Section 7—Miscellaneous updates. Section 10—Added Modbus Protocol. Section 11—Miscellaneous updates. Section 13—Miscellaneous updates. Appendix A—Updated firmware versions. Appendix D—Updated A5CO Relay Definition Block. Appendix F—New Appendix—Modbus Protocol.
20011003	Appendix A—Updated firmware versions.
20010824	Section 1—Updated UL/CSA certifications. Section 7—Updated Differential Element Commissioning Worksheet.
20010615	Section 6—Added error message to Table 6.3. Settings Sheet—Revised ranges of CTR, CTRD, 87N1P, & 87N2P. Section 10—Added reference to AB phase; clarified FREQ. Section 11—Changed symbols for 64G1 and 64G2. Section 12—Changed upgrade instructions to include SEL-2020 or SEL-2030 Communications Processor connection. Appendix A—Updated firmware versions.

Revision Date	Summary of Revisions
20001212	Section 1—Added thermal protection of generator and prime mover; revised relay specifications; added optional RTD elements; power supply output contacts; tightening torque and terminal connections; added RTD phrase to protection and control processing. Section 2—Added section on RTD based protection. Section 4—Revised Table 4.6 and Table 4.7. Section 5—Revised EIA-232 Serial Port Voltage Jumpers and Clock Battery. Section 6—Revised table 6.3; inserted RTD based protection in Settings Sheet. Section 10—Added MET T command. Appendix A—Updated firmware versions.
20000616	Reissued entire manual with new date code. Section 1—Added Connectorized® and panel-mount models, features, and ordering options; added 110 Vdc power supply option; revised relay specifications; added Out-of-Step Element to setting ranges and accuracies; revised timing accuracy for volts/hertz (24) element. Section 2—Added description of the 78 element; set processing rate for 40 and 78 elements at one-half cycle; revised pickup time for 50 element; and corrected minor typographical errors; latch variables increased to 16; number of 15-cycle event reports reduced to 29. Section 3—Revised SER triggering to accommodate 78 element; local bits increased to 16. Section 4—Added 78 element to trip equations; revised Relay Word bit definitions; increased latch, remote, and local bits to 16; increased display points to 16; revised Tables 4.6 and 4.7. Section 5—Added discussion and related data for the Connectorized and panel-mount versions. Section 6—Added setting entries for the 78 element; revised Settings Sheets to reflect increased local, remote, and latch bits, and display points. Section 7—Added commissioning details for the 78 element. Section 9—Increased local bits to 16. Section 10—Added references to SEL-2030 wherever applicable; added new screen captures to reflect addition of 78 element; revised Relay Word bit tables; reduced number of 15-cycle event reports to 29; revised Table 10.7. Section 11—Revised Event Report Columns and Sample Event Report to reflect 78 element; reduced number of 15-cycle event reports to 29. Appendix A—Updated firmware versions. Appendix D—Revised sample DNA message outputs. Appendix E—Revised Relay Word bit lists; revised sample CEV outputs.
20000615	Section 2—Negative-Sequence magnitude of $3 \cdot I_2$ replaced by I_2 on pages 2-40 and 2-49.
20000218	Appendix A—Updated firmware versions.
19990421	Section 1—Added 24 Vdc relay part number option. Section 7—Added 24 Vdc option to commissioning description. Appendix A—Updated firmware versions.
19990312	Section 2—Corrected phase distance element reach setting instructions on Page 2-14. Section 7—Corrected phase distance element testing instructions on Page 7-23.
19990115	Section 2—Corrected Enable Backup Protection setting on Page 2-8 and Enable Overvoltage Protection setting on Page 2-9. Section 4—Corrected setting name for Synch-Check Phase on Page 4-25. Section 4—Corrected typographical error in Figure 4.18 on Page 4-41.

Revision Date	Summary of Revisions
19981125	Section 1—Updated power supply information in General Specifications on Page 1-16. Section 2—Updated phase distance element logic diagram on Page 2-16. Section 2—Off-Frequency Accumulators, Setting Descriptions—adjusted Accumulator Time-Delayed Pickup range on Page 2-78. Section 5—Updated Relay Dimension and Panel Cutout drawing on Page 5-1. Changed voltage amount to 200 V continuous in Potential Transformer Inputs section on Page 5-9. Modified Figure 5.17 on Page 5-16. Settings Sheets—Added Voltage Ratio Correction Factor, 25RCF setting on Page 3. Added setting name for Independent Harmonic Blocking Setting (IHBL) on Page 10. Section 7—Miscellaneous edits from Page 7-19 through the end of the section. Section 8—Clarified Differential Metering quantities on page 8-12. Section 10—SHO Command (Show/View Settings)—Reworded sentence at the bottom of Page 10-23. Section 13—Changed IRS1 equation to read "IRS1 = 3 per unit of TAP" on Pages 13-10 and 13-15. Appendix A—Updated firmware versions.
19980731	Add danger warnings (in English and French) against electrical shock, fire, energy/high current levels and mechanical hazards to be in compliance with North American Product Safety guidelines.
19980717	Create Relay Models 0300G2 and 0300G3, making synch-check option available. Add support for open-delta pts. Add 27PP2, 59PP2 phase-to-phase voltage elements. Add 21P phase mho distance elements, add EBUP setting to enable one backup protection element at a time. Add 87N ground differential element to models 0300G0 and 0300G2. Add single-phase 50H2 element settings to models 0300G1 and 0300G3. Reduce maximum voltage element setting to 200.0 V secondary Remove 51P phase time-overcurrent element. Add error message tables; add relay model tables to Section 1. Modify page format.
19980429	Modify Appendix A.
19980417	Correct typographical errors; Clarify relay setting precision.
19980320	Added Section 13: Differential Element Settings; Added differential element test information and Differential Element Commissioning Worksheet to Section 7: Relay Commissioning; Moved VNOM and INOM settings from Global to Group setting; Added MET DIF and EVE DIF command descriptions; Clarified the calculation of the 64G2P setting.
19980130	Initial Release.

APPENDIX B: FIRMWARE UPGRADE INSTRUCTIONS

OVERVIEW

From time to time, SEL issues firmware upgrades for this relay. The instructions that follow explain how you can install new firmware in your SEL-300 series relay. In addition, SEL issues firmware upgrades for the optional Ethernet ports (see Ethernet Port Firmware Upgrade Instructions on page B-19).

This firmware upgrade kit contains firmware files for the relay, and also for the Ethernet port of the relay, if the relay is equipped for Ethernet communications. Follow the Relay Firmware Upgrade Instructions of this document to upgrade the Relay Firmware. Follow the Ethernet Port Firmware Upgrade Instructions on page B-19 to upgrade the Ethernet port. If both Relay and Ethernet firmware are upgraded, follow the instructions in their entirety, starting on page 1.

Note: SEL recommends that you upgrade all firmware to the latest revisions provided on the upgrade CD. Relay and Ethernet firmware files may be provided on the upgrade CD. Use the **STATUS** command to the relay and Ethernet card (if equipped) to compare firmware revision numbers between the files provided on the upgrade CD and those present in the relay prior to starting the upgrade process.

RELAY FIRMWARE UPGRADE INSTRUCTIONS

Introduction

These firmware upgrade instructions apply to all SEL-300 series relays except the SEL-321 series relays (which use EPROM instead of Flash).

SEL occasionally offers firmware upgrades to improve the performance of your relay. Changing physical components is unnecessary because the relay stores firmware in Flash memory.

A firmware loader program called SELBOOT resides in the relay. To upgrade firmware, use the SELBOOT program to download an SEL-supplied file from a personal computer to the relay via any communications port. This procedure is described in the following steps.

Note: SEL strongly recommends that you upgrade firmware at the location of the relay and with a *direct connection* from the personal computer to one of the relay serial ports. Do not load firmware from a remote location; problems can arise that you will not be able to address from a distance. When upgrading at the substation, do not attempt to load the firmware into the relay through an SEL communications processor.

Perform the firmware upgrade process in the following sequence:

A. Prepare the Relay

B. Establish a Terminal Connection

C. Save Settings and Other Data

D. Start SELBOOT

E. Download Existing Firmware

F. Upload New Firmware

G. Check Relay Self-Tests

H. Verify Settings, Calibration, Status, Breaker Wear, and Metering

I. Return the Relay to Service

Required Equipment

Gather the following equipment before starting this firmware upgrade:

- Personal computer (PC)
- Terminal emulation software that supports 1K Xmodem or Xmodem (these instructions use HyperTerminal® from a Microsoft® Windows® operating system)
- Serial communications cable (SEL Cable C234A or equivalent)
- Disk containing the firmware upgrade file
- Firmware Upgrade Instructions (these instructions)

Optional Equipment

These items help you manage relay settings and understand firmware upgrade procedures:

- SEL-5010 Relay Assistant Software or ACSELERATOR QuickSet® SEL-5030 software

  The SEL-5010 Relay Assistant software has a feature that guides you through the conversion process. This upgrade guide will assist you with steps C, D, E, F, and G of these upgrade instructions. If you do not have the latest SEL-5010 software, please contact your customer service representative or the factory for details on getting the SEL-5010 Relay Assistant software.

- Your relay instruction manual

Upgrade Procedure

A. Prepare the Relay

Step 1. If the relay is in use, follow your company practices for removing a relay from service.

Typically, these include changing settings, or disconnecting external voltage sources or output contact wiring, to disable relay control functions.

Step 2. Apply power to the relay.

Step 3. From the relay front panel, press the **{SET}** pushbutton.

Step 4. Use the arrow pushbuttons to navigate to PORT.

Step 5. Press the **{SELECT}** pushbutton.

Step 6. Use the arrow pushbuttons to navigate to the relay serial port you plan to use (usually the front port).

Step 7. Press the **{SELECT}** pushbutton.

Step 8. With SHOW selected, press the **{SELECT}** pushbutton.

Step 9. Press the **{Down Arrow}** pushbutton to scroll through the port settings; write down the value for each setting.

Step 10. At the EXIT SETTINGS? prompt, select Yes and press the **{SELECT}** pushbutton.

Step 11. Connect an SEL Cable C234A (or equivalent) serial communications cable to the relay serial port selected in Step 6 above.

B. Establish a Terminal Connection

To establish communication between the relay and a personal computer, you must be able to modify the computer serial communications parameters (i.e., data transmission rate, data bits, parity) and set the file transfer protocol to 1K Xmodem or Xmodem protocol.

Step 1. Connect a serial communications cable to the computer serial port:

a. Check the computer for a label identifying the serial communications ports.

b. Choose a port and connect an SEL Cable C234A (or equivalent) serial communications cable to the personal computer serial port.

If there is no identification label, connect the cable to any computer serial port. Note that you might later change this computer serial port to a different port in order to establish communication between the relay and the computer.

Step 2. Disconnect any other serial port connection(s).

Step 3. From the computer, open **HyperTerminal**.

On a personal computer running Windows, you would typically click **Start > Programs > Accessories**.

Step 4. Enter a name, select any icon, and click **OK** (Figure 1).

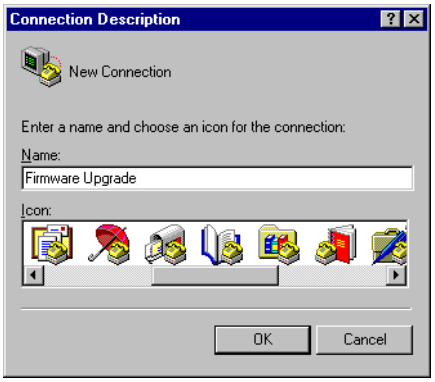

Figure 1: Establishing a Connection

Step 5. Select the computer serial port you are using to communicate with the relay (Figure 2) and click **OK**. This port matches the port connection that you made in Step 1 under ***B. Establish a Terminal Connection***.

Figure 2: Determining the Computer Serial Port

Step 6. Establish serial port communications parameters:

The settings for the computer (Figure 3) must match the relay settings you recorded earlier.

a. Enter the serial port communications parameters (Figure 3) that correspond to the relay settings you recorded in Step 9 under ***A. Prepare the Relay***.

If the computer settings do not match the relay settings, change the computer settings to match the relay settings.

b. Click **OK**.

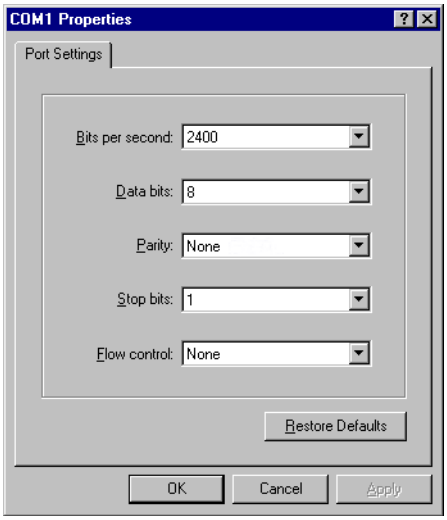

Figure 3: Determining Communications Parameters for the Computer

Step 7. Set terminal emulation to VT100:

a. From the **File** menu, choose **Properties**.

b. Select the **Settings** tab in the **Firmware Upgrade Properties** dialog box (Figure 4).

c. Select **VT100** from the **Emulation** list box and click **OK**.

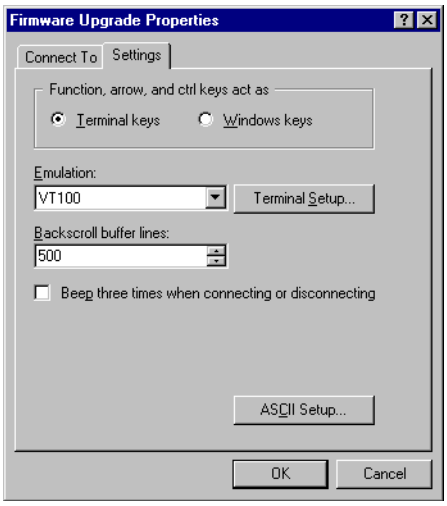

Figure 4: Setting Terminal Emulation

Step 8. Confirm serial communication.

Press **<Enter>**. In the terminal emulation window, you should see the Access Level 0 = prompt, similar to that in Figure 5.

If this is successful, proceed to ***C. Save Settings and Other Data*** on page B-7.

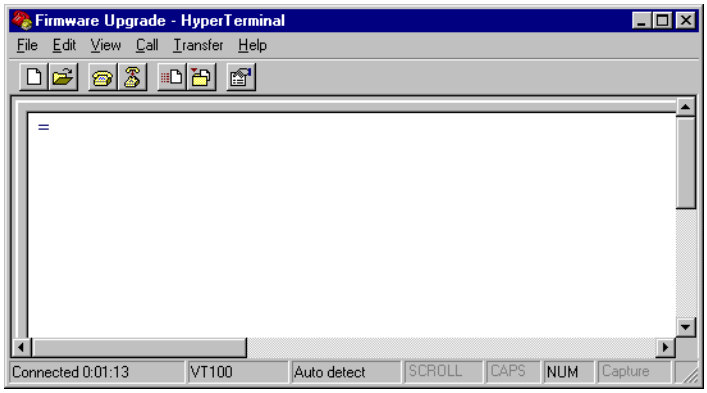

Figure 5: Terminal Emulation Startup Prompt

Failure to Connect

If you do not see the Access Level 0 = prompt, press **<Enter>** again. If you still do not see the Access Level 0 = prompt, you have either selected the incorrect serial communications port on the computer, or the computer speed setting does not match the data transmission rate of the relay. Perform the following steps to reattempt a connection.

Step 9. From the **Call** menu, choose **Disconnect** to terminate communication.

Step 10. Correct the port setting.

a. From the **File** menu, choose **Properties**.

You should see a dialog box similar to Figure 6.

b. Select a different port in the **Connect using** list box.

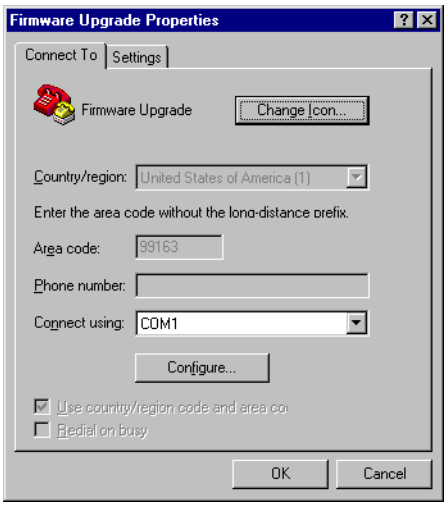

Figure 6: Correcting the Port Setting

Step 11. Correct the communications parameters.

a. From the filename **Properties** dialog box shown in Figure 6, click **Configure**.

You will see a dialog box similar to Figure 7.

b. Change settings in the appropriate list boxes to match the settings you recorded in Step 9 under ***A. Preparing the Relay*** and click **OK** twice to return to the terminal emulation window.

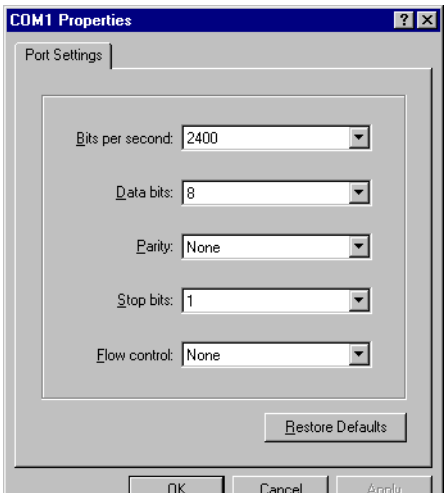

Figure 7: Correcting the Communications Parameters

Step 12. Press **<Enter>**. In the terminal emulation window, you should see the Access Level 0 = prompt, similar to that in Figure 5.

C. Save Settings and Other Data

Before upgrading firmware, retrieve and record any History (**HIS**), Event (**EVE**), Metering (**MET**), Breaker Wear Monitor (**BRE**), Communications Log Summary (**COM X** or **COM Y**), or Sequential Events Recorder (**SER**) data that you want to retain (see the relay instruction manual for these procedures).

Enter Access Level 2

Step 1. Type **ACC <Enter>** at the Access Level 0 = prompt.

Step 2. Type the Access Level 1 password and press **<Enter>**.

You will see the Access Level 1 => prompt.

Step 3. Type **2AC <Enter>**.

Step 4. Type the Access Level 2 password and press **<Enter>**.

You will see the Access Level 2 =>> prompt.

Note: If the relay does not prompt you for Access Level 1 and Access Level 2 passwords, check whether the relay has a password jumper in place. With this jumper in place, the relay is unprotected from unauthorized access (see the relay instruction manual).

Backup Relay Settings

The relay preserves settings and passwords during the firmware upgrade process. However, interruption of relay power during the upgrade process can cause the relay to lose settings. Make a copy of the original relay settings in case you need to reenter the settings. Use either the SEL-5010 Relay Assistant software or ACSELERATOR QuickSet to record the existing relay settings and proceed to ***D. Start SELBOOT*** on page B-8. Otherwise, perform the following steps.

Step 1. From the **Transfer** menu in **HyperTerminal**, select **Capture Text**.

Step 2. Enter a directory and filename for a text file where you will record the existing relay settings.

Step 3. Click **Start**.

The **Capture Text** command copies all the information you retrieve and all the keystrokes you type until you send the command to stop capturing text. The terminal emulation program stores these data in the text file.

Step 4. Execute the Show Calibration (**SHO C**) command to retrieve the relay calibration settings.

Use the following Show commands to retrieve the relay settings: SHO G, SHO 1, SHO L 1, SHO 2, SHO L 2, SHO 3, SHO L 3, SHO 4, SHO L 4, SHO 5, SHO L 5, SHO 6, SHO L 6, SHO P 1, SHO P 2, SHO P 3, SHO P F, SHO R, and SHO T.

Note: Settings classes can vary among SEL relays. See the relay instruction manual for a listing.

Step 5. From the **Transfer** menu in **HyperTerminal**, select **Capture Text** and click **Stop**.

The computer saves the text file you created to the directory you specified in Step 2 under ***Backup Relay Settings***.

Step 6. Write down the present relay data transmission setting (SPEED).

This setting is SPEED in the **SHO P** relay settings output. The SPEED value should be the same as the value you recorded in ***A. Prepare the Relay*** on page B-2.

D. Start SELBOOT

Step 1. Find and record the firmware identification string (FID):

a. From the **File** menu, choose **Properties**.

b. Select the **Settings** tab in the **Properties** dialog box (Figure 4).

c. Click **ASCII Setup**.

You should see a dialog box similar to Figure 8.

d. Under **ASCII Receiving**, select the check box to **Append line feeds to incoming line ends**.

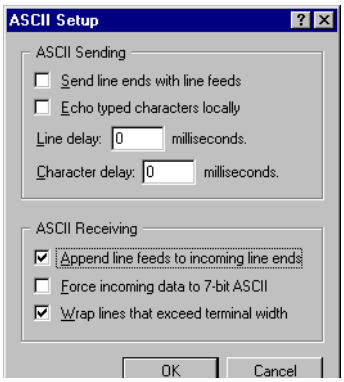

Figure 8: Preparing HyperTerminal for ID Command Display

e. Click **OK** twice to go back to the terminal emulation window.

f. Type **ID <Enter>** and record the FID number the relay displays.

g. Repeat Step a through Step c, then uncheck the **Append line feeds to incoming line ends** check box. (This feature can cause problems when uploading firmware to the relay.)

Step 2. From the computer, start the SELBOOT program.

a. From the Access Level 2 =>> prompt, type **L_D <Enter>**.

The relay responds with the following:

```
Disable relay to send or receive firmware (Y/N)?
```

b. Type **Y <Enter>**.

The relay responds with the following:

```
Are you sure (Y/N)?
```

c. Type **Y <Enter>**.

The relay responds with the following:

```
Relay Disabled.
```

Step 3. Wait for the SELBOOT program to load.

The front-panel LCD screen displays the SELBOOT firmware number (e.g., SLBT-3xx-R100). The number following the R is the SELBOOT revision number. This number is different from the relay firmware revision number.

After SELBOOT loads, the computer will display the SELBOOT !> prompt.

Step 4. Press **<Enter>** to confirm that the relay is in SELBOOT.

You will see another SELBOOT !> prompt.

Commands Available in SELBOOT

For a listing of commands available in SELBOOT, type **HELP <Enter>**. You should see a screen similar to Figure 9.

```
!>HELP <Enter>
SELboot-3xx-R100

bau "rate"  ; Set baud rate to 300, 1200, 2400, 4800, 9600, 19200, or 38400 baud
era         ; Erase the existing relay firmware
exi         ; Exit this program and restart the device
fid         ; Print the relays firmware id
rec         ; Receive new firmware for the relay using xmodem
sen         ; Send the relays firmware to a pc using xmodem
hel         ; Print this list

FLASH Type : 040         Checksum = 370E  OK
```

Figure 9: List of Commands Available in SELBOOT

Establish a High-Speed Connection

Step 5. Type **BAU 38400 <Enter>** at the SELBOOT !> prompt.

Match Computer Communications Speed to the Relay

Step 6. From the **Call** menu, choose **Disconnect** to terminate communication.

Step 7. Correct the communications parameters:

a. From the **File** menu, choose **Properties**.

b. Choose **Configure**.

c. Change the computer communications speed to match the new data transmission rate in the relay (Figure 10).

d. Click **OK** twice.

Step 8. Press **<Enter>** to check for the SELBOOT !> prompt indicating that serial communication is successful.

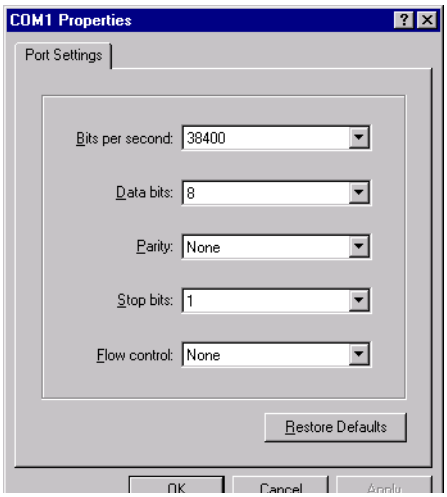

Figure 10: Matching Computer to Relay Parameters

E. Download Existing Firmware

Copy the firmware presently in the relay, in case the new firmware upload is unsuccessful. To make a backup of the existing firmware, the computer will need as much as 3 MB of free disk space. This backup procedure takes 5–10 minutes at 38400 bps.

Step 1. Type **SEN <Enter>** at the SELBOOT !> prompt to initiate the firmware transfer from the relay to the computer.

Step 2. From the **Transfer** menu in **HyperTerminal**, select **Receive File**.

You should see a dialog box similar to Figure 11.

Step 3. Enter the pathname of a folder on the computer hard drive where you want to record the existing relay firmware.

Step 4. Select **1K Xmodem** if this protocol is available on the PC.

If the computer does not have **1K Xmodem**, choose **Xmodem**.

Step 5. Click **Receive**.

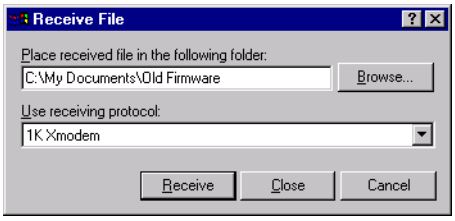

Figure 11: Example Receive File Dialog Box

Step 6. Enter a filename that clearly identifies the existing firmware version (Figure 12), using the version number from the FID you recorded in Step 1 under ***D. Start SELBOOT*** on page B-8, and click **OK**.

SEL lists the firmware revision number first, then the product number.

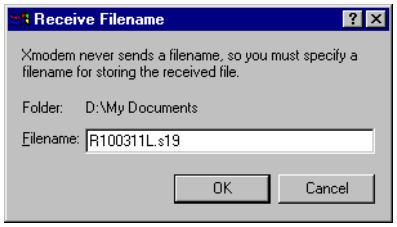

Figure 12: Example Filename Identifying Old Firmware Version

If Xmodem times out before the download completes, repeat the process from Step 1 on page B-11.

Note: HyperTerminal stored any pathname you entered in Step 3 and any filename you entered in Step 6 during the earlier download attempt; this saves you from reentering these on a subsequent attempt.

For a successful download, you should see a dialog box similar to Figure 13. After the transfer, the relay responds with the following:

```
Download completed successfully!
```

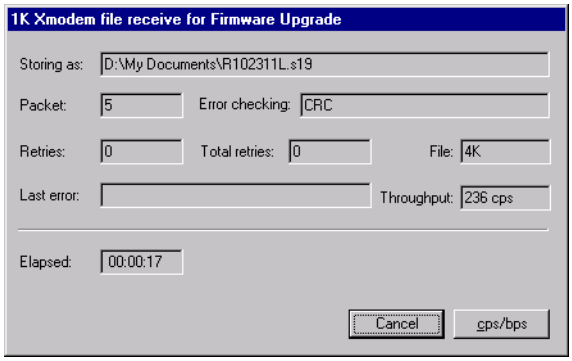

Figure 13: Downloading Old Firmware

F. Upload New Firmware

Step 1. Prepare to load the firmware:

a. Insert the disk containing the new firmware into the appropriate disk drive on the computer.

Note: This example shows uploading new firmware directly from a disk. For a faster upload (and less potential for file corruption), copy the new firmware to the local hard drive and upload the new firmware from the hard drive.

b. Some firmware is in self-extracting compressed files (files with .exe extensions). For firmware in such files, from Windows Explorer double-click on the file and

select the directory on the hard drive where you want to access the uncompressed files. Verify that these uncompressed files have an .s19 extension.

Step 2. Type **REC <Enter>** at the SELBOOT !> prompt to command the relay to receive new firmware.

```
!>REC <Enter>
Caution! -  This command erases the relays firmware.
If you erase the firmware, new firmware must be loaded into the relay
before it can be put back into service.
```

The relay asks whether you want to erase the existing firmware.

```
Are you sure you wish to erase the existing firmware? (Y/N) Y <Enter>
```

Step 3. Type **Y** to erase the existing firmware and load new firmware. (To abort, type **N** or press **<Enter>**).

The relay responds with the following:

```
Erasing
Erase successful
Press any key to begin transfer, then start transfer at the PC <Enter>
```

Step 4. Press **<Enter>** to start the file transfer routine.

Step 5. Send new firmware to the relay.

a. From the **Transfer** menu in **HyperTerminal**, choose **Send File** (Figure 14).

b. In the **Filename** text box, type the location and filename of the new firmware or use the **Browse** button to select the firmware file.

c. In the **Protocol** text box, select **1K Xmodem** if this protocol is available.

If the computer does not have **1K Xmodem**, select **Xmodem**.

d. Click **Send** to send the file containing the new firmware.

You should see a dialog box similar to Figure 15. Incrementing numbers in the **Packet** box and a bar advancing from left to right in the **File** box indicate that a transfer is in progress.

Receiving software takes 10–15 minutes at 38400 bps, depending on the relay. If you see no indication of a transfer in progress within a few minutes after clicking **Send**, use the **REC** command again and reattempt the transfer.

After the transfer completes, the relay displays the following:

```
Upload completed successfully. Attempting a restart.
```

A successful restart sequence can take as long as two minutes, after which time the relay leaves SELBOOT. You will see no display on your PC to indicate a successful restart.

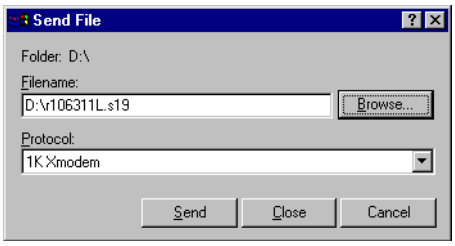

Figure 14: Selecting New Firmware to Send to the Relay

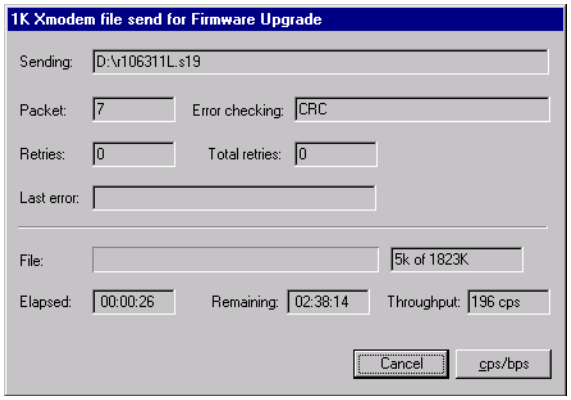

Figure 15: Transferring New Firmware to the Relay

Note: Unsuccessful uploads can result from Xmodem time-out, a power failure, loss of communication between the relay and the computer, or voluntary cancellation. Check connections, reestablish communication, and start again at Step 2 under ***F. Upload New Firmware***.

If you want to reload the previous firmware, begin at Step 2 under ***F. Upload New Firmware*** and use the firmware you saved in ***E. Download Existing Firmware*** on page B-11. Contact the factory for assistance in achieving a successful firmware upgrade.

Step 6. Press **<Enter>** and confirm that the Access Level 0 = prompt appears on the computer screen.

Step 7. If you see the Access Level 0 = prompt, proceed to ***G. Check Relay Self-Tests*** on page B-16.

Note: The relay restarts in SELBOOT if relay power fails while receiving new firmware. Upon power-up, the relay serial port will be at the default 2400 baud. Perform the steps beginning on page B-3 under ***B. Establish a Terminal Connection*** to increase the serial connection data speed. Then resume the firmware upgrade process at ***F. Upload New Firmware***.

No Access Level 0 = Prompt

If no Access Level 0 = prompt appears in the terminal emulation window, one of three things could have occurred. Refer to Table 1 to determine the best solution.

Table 1: Troubleshooting New Firmware Upload

Problem	Solution
The restart was successful, but the relay data transmission rate reverted to the rate at which the relay was operating prior to entering SELBOOT (the rate you recorded in ***A. Prepare the Relay*** on page B-2).	Change the computer terminal speed to match the relay data transmission rate you recorded in ***A. Prepare the Relay*** on page B-2 (see ***Match Computer Communications Speed to the Relay*** on page B-10): **Step 1.** From the **Call** menu, choose **Disconnect** to terminate relay communication. **Step 2.** Change the communications software settings to the values you recorded in ***A. Prepare the Relay*** on page B-2. **Step 3.** From the **Call** menu, choose **Connect** to reestablish communication. **Step 4.** Press **<Enter>** to check for the Access Level 0 = prompt indicating that serial communication is successful. **Step 1.** If you get no response, proceed to ***Match Computer Communications Speed to the Relay*** on page B-10.
The restart was successful, but the relay data transmission rate reverted to 2400 bps (the settings have been reset to default).	Match the computer terminal speed to a relay data transmission rate of 2400 bps: **Step 1.** From the **Call** menu, choose **Disconnect** to terminate relay communication. **Step 2.** Change the communications software settings to 2400 bps, 8 data bits, no parity, and 1 stop bit (see ***Match Computer Communications Speed to the Relay*** on page B-10). **Step 3.** From the **Call** menu, choose **Connect** to reestablish communication. **Step 4.** Press **<Enter>** to check for the Access Level 0 = prompt indicating successful serial communication. If you see a SELBOOT !> prompt, type **EXI <Enter>** to exit SELBOOT. Check for the Access Level 0 = prompt. If you see the Access Level 0 = prompt, proceed to ***G. Check Relay Self-Tests***.
The restart was unsuccessful, in which case the relay is in SELBOOT.	Reattempt to upload the new firmware (beginning at Step 5 under ***Establish a High-Speed Connection*** on page B-10) or contact the factory for assistance.

G. Check Relay Self-Tests

The relay can display various self-test fail status messages. The troubleshooting procedures that follow depend upon the status message the relay displays.

Step 1. Type **ACC <Enter>**.

Step 2. Type the Access Level 1 password and press **<Enter>**.

You will see the Access Level 1 => prompt.

Step 3. Enter the **STATUS** command (**STA <Enter>**) to view relay status messages.

If the relay displays no fail status message, proceed to ***H. Verify Settings, Calibration, Status, Breaker Wear, and Metering*** on page B-18.

IO_BRD Fail Status Message

Perform this procedure if you have only an IO_BRD Fail Status message; for additional fail messages, proceed to ***CR_RAM, EEPROM, and IO_BRD Fail Status Messages***.

Step 1. From Access Level 2, type **INI <Enter>** to reinitialize the I/O board(s). If this command is unavailable, go to ***CR_RAM, EEPROM, and IO_BRD Fail Status Messages.***

The relay asks the following question:

```
Are the new I/O board(s) correct (Y/N)?
```

a. Type **Y <Enter>**.

b. After a brief interval (as long as a minute), the EN LED will illuminate.

If the EN LED does not illuminate and you see a SELBOOT !> prompt, type **EXI <Enter>** to exit SELBOOT. After a brief interval the EN LED will illuminate. Check for Access Level 0 = prompt.

c. Use the **ACC** and **2AC** commands and type the corresponding passwords to reenter Access Level 2.

d. Enter the **SHO *n*** command to view relay settings and verify that these match the settings you saved (see ***Backup Relay Settings*** beginning on page B-8).

Note: Depending upon the relay, *n* can be 1–6, G, P, L, T, R, X, or Y.

Step 2. If the settings do not match, reenter the settings you saved earlier.

a. If you have SEL-5010 Relay Assistant software or ACSELERATOR QuickSet, restore original settings by following the instructions for the respective software.

b. If you do not have the SEL-5010 Relay Assistant software or ACSELERATOR QuickSet, restore original settings by issuing the necessary **SET *n*** commands, where *n* can be 1–6, G, P, L, T, R, X, or Y (depending upon the settings classes in the relay).

Step 3. Use the **PAS** command to set the relay passwords.

For example, type **PAS 1 <Enter>** to set the Access Level 1 password.

Use a similar format for other password levels. SEL relay passwords are case sensitive, so the relay treats lowercase and uppercase letters as different letters.

Step 4. Go to ***H. Verify Calibration, Status, Breaker Wear, and Metering*** on page B-18.

CR_RAM, EEPROM, and IO_BRD Fail Status Messages

Step 1. Use the **ACC** and **2AC** commands with the associated passwords to enter Access Level 2.

The factory default passwords are in effect; use the default relay passwords listed in the **PAS** command description in the relay instruction manual.

Step 2. Type **R_S <Enter>** to restore factory default settings in the relay (type **R_S 1 <Enter>** for a 1 A SEL-387 or 1 A SEL-352 Relay).

The relay asks whether to restore default settings. If the relay does not accept the **R_S** (or **R_S 1**) command, contact your customer service representative or the factory for assistance.

Step 3. Type **Y <Enter>**.

The relay can take as long as two minutes to restore default settings. The relay then reinitializes, and the EN LED illuminates.

Note: If the relay prompts you to enter a part number, use either the number from the firmware envelope label or the number from the new part number sticker (if supplied).

Step 4. Press **<Enter>** to check for the Access Level 0 = prompt indicating that serial communication is successful.

Step 5. Use the **ACC** and **2AC** commands and type corresponding passwords to reenter Access Level 2.

Step 6. Restore the original settings:

a. If you have SEL-5010 Relay Assistant software or ACSELERATOR QuickSet, restore the original settings by following the instructions for the respective software.

b. If you do not have the SEL-5010 Relay Assistant software or ACSELERATOR QuickSet, restore the original settings by issuing the necessary **SET *n*** commands, where *n* can be 1–6, G, P, L, T, R, X, or Y (depending upon the settings classes available in the relay).

Step 7. Use the **PAS** command to set the relay passwords.

For example, type **PAS 1 <Enter>** to set the Access Level 1 password.

Use a similar format for other password levels. SEL relay passwords are case sensitive, so the relay treats lowercase and uppercase letters as different letters.

Step 8. If any failure status messages still appear on the relay display, see the troubleshooting section in the relay instruction manual or contact your customer service representative or the factory for assistance.

H. Verify Settings, Calibration, Status, Breaker Wear, and Metering

Step 1. Use the **ACC** and **2AC** commands with the associated passwords to enter Access Level 2.

Step 2. Use the **SHO** command to view the relay settings and verify that these match the settings you saved earlier (see ***Backup Relay Settings*** on page B-8).

If the settings do not match, reenter the settings you saved earlier (see Step 6 under ***CR_RAM, EEPROM, and IO_BRD Fail Status Messages*** on page B-17).

Step 3. Type **SHO C <Enter>** to verify the relay calibration settings.

If the settings do not match the settings contained in the text file you recorded in ***Save Settings and Other Data*** on page B-7, contact your customer service representative or the factory for assistance.

Step 4. Use the firmware identification string (FID) to verify download of the correct firmware:

a. From the **File** menu, choose **Properties**.

b. Select the **Settings** tab in the **Firmware Upgrade Properties** dialog box (Figure 4).

c. Click **ASCII Setup**.

You should see a dialog box similar to Figure 16.

d. Under **ASCII Receiving**, select the check box to **Append line feeds to incoming line ends**.

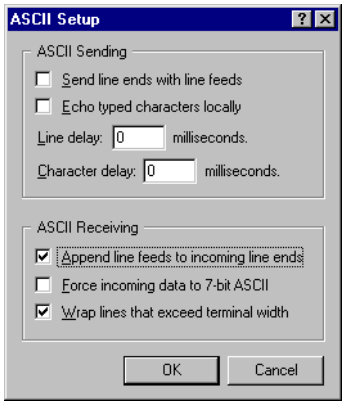

Figure 16: Preparing HyperTerminal for ID Command Display

e. Click **OK** twice to return to the terminal emulation window.

f. Type **ID <Enter>** and compare the number the relay displays against the number from the firmware envelope label.

g. If the label FID and part number match the relay display, proceed to Step 5.

h. For a mismatch between a displayed FID or part number and the firmware envelope label, reattempt the upgrade or contact the factory for assistance.

Step 5. Type **STA <Enter>** and verify that all relay self-test parameters are within tolerance.

Step 6. If you use the Breaker Wear Monitor, type **BRE <Enter>** to check the data and see if the relay retained breaker wear data through the upgrade procedure.

If the relay did not retain these data, use the **BRE W*n*** command to reload the percent contact wear values for each pole of Circuit Breaker *n* (*n* = 1, 2, 3, or 4) you recorded in ***C. Save Settings and Other Data*** on page B-7.

Step 7. Apply current and voltage signals to the relay.

Step 8. Type **MET <Enter>** and verify that the current and voltage signals are correct.

Step 9. Use the **TRIGGER** and **EVENT** commands to verify that the magnitudes of the current and voltage signals you applied to the relay match those displayed in the event report.

If these values do not match, check the relay settings and wiring.

I. Return the Relay to Service

Step 1. Follow your company procedures for returning a relay to service.

Step 2. Autoconfigure the SEL communications processor port if you have an SEL communications processor connected to the relay.

This step reestablishes automatic data collection between the SEL communications processor and the relay. Failure to perform this step can result in automatic data collection failure when cycling communications processor power.

The relay is now ready for your commissioning procedure.

ETHERNET PORT FIRMWARE UPGRADE INSTRUCTIONS

Introduction

Note: This section only applies to products equipped with an optional Ethernet port.

Perform the firmware upgrade process in the following sequence:

A. Prepare the Relay

B. Establish an FTP Connection and Transfer New Firmware

C. Establish a Telnet Connection

D. Verify Firmware Transfer

E. Verify IEC 61850 Operation (Optional)

Required Equipment

Gather the following equipment before starting this firmware upgrade:

- Personal computer (PC)
- FTP client software (may be included with the PC operating system)
- Disk containing the communications card firmware upgrade (.s19) file
- Firmware upgrade instructions (these instructions)

Upgrade Procedure

A. Prepare the Relay

Step 1. If the relay is in use, follow your company practices for removing a relay from service. Typically, these include changing settings, or disconnecting external voltage sources or output contact wiring, to disable relay control functions.

Step 2. Apply power to the relay.

Step 3. Apply the following PORT 1 setting and leave all others at default.

PROTO = TELNET

Step 4. These instructions assume that the Ethernet port (PORT 5) settings are set as follows:

IPADDR = 10.201.0.213
SUBNETM = 255.255.0.0
DEFRTR = 10.201.0.1
ETELNET = Y
TPORTC = 1024
EFTPSERV = Y
FTPUSER = 2AC

Note: Use IP settings (IPADDR, SUBNETM, DEFRTR) that are compatible with your PC's network settings.

B. Establish an FTP Connection and Transfer New Firmware

The following instructions use the Microsoft Windows command line and FTP client to establish an FTP connection between a PC and the relay. Consult your operating system or FTP client manuals if your equipment or software differs. These instructions assume that both devices are on the same side of any firewalls.

Step 1. Connect an Ethernet cable from the relay Ethernet port to an Ethernet switch and another cable from the PC Ethernet port to the same Ethernet switch.

Alternatively, connect a crossover Ethernet cable between the relay Ethernet port (PORT 5) and the PC Ethernet port.

Step 2. Copy the firmware upgrade file to the root directory of the PC's primary drive (usually C:\).

Step 3. Open a Command Prompt window.

a. Click **Start > Run**.

b. Type **cmd** in the dialog box.

c. Click **OK**.

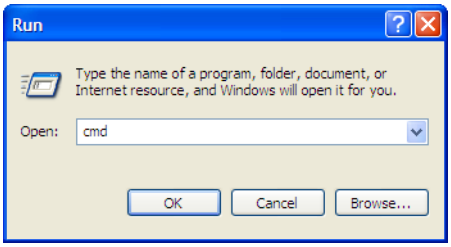

Step 4. In the Command Prompt window, set the current directory to the root of the primary drive (usually C:\).

a. Type **C: <Enter>**.

b. Type **cd \ <Enter>**.

Step 5. In the Command Prompt window, type **FTP <IP Address> <Enter>** (substitute the IP address of the Ethernet port for <*IP Address*>, e.g., **FTP 10.201.0.213**).

Step 6. When prompted, type the relay FTPUSER user name (the default user name is 2AC) and press **<Enter>**. After that, type the FTP user password (the default password is TAIL) and press **<Enter>**.

Step 7. Set the FTP file transfer mode to Binary by typing **BIN <Enter>** at the FTP prompt.

Step 8. Transfer the new firmware to the relay by typing **PUT C:\filename.s19 <Enter>** at the FTP prompt (substitute the firmware file name for *filename.s19*).

Step 9. The FTP file transfer will begin immediately. As the transfer progresses, and upon completion, messages similar to the following will be displayed.

```
200 PORT Command okay.

150 File status okay; about to open data connection.

226 Closing data connection.

ftp: 2926780 bytes sent in 46.80 Seconds 62.54 Kbytes/sec.
```

Step 10. Type **QUIT <Enter>** to exit the FTP session when the transfer is complete.

Step 11. (Optional) Delete the firmware upgrade file from the root directory of the computer's primary drive by typing **DELETE C:\filename.s19 <Enter>** at the command prompt.

C. Establish a Telnet Connection

To establish a Telnet-to-card connection, perform the following steps.

Step 1. Click **Start > Run**.

Step 2. Type **cmd <Enter>** to launch a Command Prompt window.

Step 3. Type **Telnet <IP Address> port** at the prompt (e.g., **Telnet 10.201.0.213 1024**).

Step 4. Press **<Enter>** several times until you see the = prompt.

D. Verify Firmware Transfer

To verify the firmware transfer completed properly, perform the following steps after establishing a Telnet connection.

Step 1. Issue a Status (**STA**) command.

Step 2. Verify that the Status report does not include any warnings or failures.

Step 3. Verify that the Status report includes "Device Enabled" at the end of the report.

Step 4. Verify that the Status report FID matches the FID of the firmware you transferred.

E. Verify or Restart IEC 61850 Operation (Optional)

SEL-300 series relays with optional IEC 61850 protocol require the presence of one valid CID file to enable the protocol. You should only transfer a CID file to the relay if you want to implement a change in the IEC 61850 configuration or if new Ethernet port firmware does not support the current CID file version. If you transfer an invalid CID file, the relay will disable the IEC 61850 protocol, as it no longer has a valid configuration. To restart IEC 61850 protocol operation, you must transfer a valid CID file to the relay.

Perform the following steps to verify that the IEC 61850 protocol is still operational after an Ethernet port firmware upgrade and if not, re-enable it. This procedure assumes that IEC 61850 was operational with a valid CID file immediately before initiating the Ethernet port firmware upgrade.

Step 1. Establish an FTP connection to the relay Ethernet port (See B. Establish an FTP Connection).

Step 2. Open the ERR.TXT file for reading.

If the ERR.TXT file contains error messages relating to CID file parsing, this indicates that the relay has disabled the IEC 61850 protocol. If this file is empty, the relay found no errors during CID file processing and IEC 61850 should remain enabled. Skip to Step 3 if ERR.TXT is empty.

If the IEC 61850 protocol has been disabled because of an upgrade-induced CID file incompatibility, you can use ACSELERATOR Architect® SEL-5032 Software to convert the existing CID file and make it compatible again.

a. Install the ACSELERATOR Architect software upgrade that supports your required CID file version.

b. Run ACSELERATOR Architect and open the project that contains the existing CID file for the relay.

c. Download the CID file to the relay.

   Upon connecting to the relay, ACSELERATOR Architect will detect the upgraded Ethernet port firmware and prompt you to allow it to convert the existing CID file to a supported version. Once converted, downloaded, and processed, the valid CID file allows the relay to re-enable the IEC 61850 protocol.

Step 3. In the Telnet session, type **GOO <Enter>**.

Step 4. View the GOOSE status and verify that the transmitted and received messages are as expected.

FACTORY ASSISTANCE

We appreciate your interest in SEL products and services. If you have questions or comments, please contact us at:

Schweitzer Engineering Laboratories, Inc.
2350 NE Hopkins Court
Pullman, WA 99163-5603 USA
Telephone: +1.509.332.1890
Fax: +1.509.332.7990
Internet: www.selinc.com
Email: info@selinc.com

APPENDIX C: SEL DISTRIBUTED PORT SWITCH PROTOCOL (LMD)

SEL Distributed Port Switch Protocol (LMD) permits multiple SEL relays to share a common communications channel. It is appropriate for low-cost, low-speed port switching applications where updating a real-time database is not a requirement.

SETTINGS

Use the front-panel SET pushbutton or the serial port **SET P** command to activate the LMD protocol. Change the port PROTO setting from the default SEL to LMD to reveal the following settings:

PREFIX: One character to precede the address. This should be a character that does not occur in the course of other communications with the relay. Valid choices are one of the following: "@", "#", "$", "%", "&". The default is "@".

ADDR: Two-character ASCII address. The range is "01" to "99". The default is "01".

SETTLE: Time in seconds that transmission is delayed after the request to send (RTS line) asserts. This delay accommodates transmitters with a slow rise time.

OPERATION

The relay ignores all input from this port until it detects the prefix character and the two-byte address. Upon receipt of the prefix and address, the relay enables echo and message transmission. Wait until you receive a prompt before entering commands to avoid losing echoed characters while the external transmitter is warming up.

Until the relay connection terminates, you can use the standard commands that are available when PROTO is set to SEL. The **QUIT** command terminates the connection. If no data are sent to the relay before the port timeup period, it automatically terminates the connection.

Enter the sequence **CTRL+X QUIT <CR>** before entering the prefix character if all relays in the multidrop network do not have the same prefix setting.

You can use the front-panel SET pushbutton to change the port settings to return to SEL protocol.

APPENDIX D: CONFIGURATION, *FAST METER*, AND *FAST OPERATE* COMMANDS

INTRODUCTION

SEL relays have two separate data streams that share the same serial port. The human data communications with the relay consist of ASCII character commands and reports that are intelligible to humans using a terminal or terminal emulation package. The binary data streams can interrupt the ASCII data stream to obtain information and then allow the ASCII data stream to continue. This mechanism allows a single communications channel to be used for ASCII communications (e.g., transmission of a long event report) interleaved with short bursts of binary data to support fast acquisition of metering data. The device connected to the other end of the link requires software that uses the separate data streams to exploit this feature. The binary commands and ASCII commands can also be accessed by a device that does not interleave the data streams.

SEL Application Guide AG95-10, ***Configuration and Fast Meter Messages***, is a comprehensive description of the SEL binary messages. Below is a description of the messages provided in the SEL-300G Relay.

MESSAGE LISTS

Binary Message List

Request to Relay (hex)	Response From Relay
A5C0	Relay Definition Block
A5C1	*Fast Meter* Configuration Block
A5D1	*Fast Meter* Data Block
A5C2	Demand *Fast Meter* Configuration Block
A5D2	Demand *Fast Meter* Data Message
A5C3	Peak Demand *Fast Meter* Configuration Block
A5D3	Peak Demand *Fast Meter* Data Message
A5B9	*Fast Meter* Status Acknowledge
A5CE	*Fast Operate* Configuration Block
A5E0	*Fast Operate* Remote Bit Control
A5E3	*Fast Operate* Breaker Control

ASCII Configuration Message List

Request to Relay (ASCII)	Response From Relay
ID	ASCII Firmware ID String and Terminal ID Setting (TID)
DNA	ASCII Names of Relay Word bits
BNA	ASCII Names of bits in the A5B9 Status Byte

MESSAGE DEFINITIONS

A5C0 Relay Definition Block

In response to the A5C0 request, the relay sends the following block:

Data	Description
A5C0	Command
42	Length
03	Support three protocols, SEL, LMD, and MOD
03	Support three *Fast Meter* messages
05	Support five status flag commands
A5C1	*Fast Meter* configuration command
A5D1	*Fast Meter* command
A5C2	Demand *Fast Meter* configuration command
A5D2	Demand *Fast Meter* command
A5C3	Peak Demand *Fast Meter* configuration command
A5D3	Peak Demand *Fast Meter* command
0004	Settings change bit
A5C100000000	*Fast Meter* configuration message
0004	Settings change bit
A5C200000000	Demand *Fast Meter* configuration message
0004	Settings change bit
A5C300000000	Peak Demand *Fast Meter* configuration message
0004	Settings change bit
444E410D0000	DNA command
0004	Settings change bit
49440D000000	ID command
0300	SEL protocol with *Fast Operate* and *Fast Messaging* (Unsolicited messaging)
0101	LMD protocol, *Fast Operate*
0002	Modbus protocol
00	Reserved
checksum	1-byte checksum of preceding bytes

A5C1 *Fast Meter* Configuration Block

In response to the A5C1 request, SEL-300G0 Relays send the following block:

Data	Description
A5C1	*Fast Meter* command
8E	Length
01	One status flag byte
00	Scale factors in *Fast Meter* message
00	No scale factors
0B	# of analog input channels
02	# of samples per channel
3A	# of digital banks
01	# of calculation blocks
0004	Analog channel offset

005C	Time stamp offset
0064	Digital offset
494100000000	Analog channel name (IA)
01	Analog channel type
FF	Scale factor type
0000	Scale factor offset in *Fast Meter* message
494200000000	Analog channel name (IB)
01	Analog channel type
FF	Scale factor type
0000	Scale factor offset in *Fast Meter* message
494300000000	Analog channel name (IC)
01	Analog channel type
FF	Scale factor type
0000	Scale factor offset in *Fast Meter* message
494E00000000	Analog channel name (IN)
01	Analog channel type
FF	Scale factor type
0000	Scale factor offset in *Fast Meter* message

When relay setting DELTA_Y = Y:

564100000000	Analog channel name (VA)
01	Analog channel type
FF	Scale factor type
0000	Scale factor offset in *Fast Meter* message
564200000000	Analog channel name (VB)
01	Analog channel type
FF	Scale factor type
0000	Scale factor offset in *Fast Meter* message
564300000000	Analog channel name (VC)
01	Analog channel type
FF	Scale factor type
0000	Scale factor offset in *Fast Meter* message

When relay setting DELTA_Y = D:

564142000000	Analog channel name (VAB)
01	Analog channel type
FF	Scale factor type
0000	Scale factor offset in *Fast Meter* message
564243000000	Analog channel name (VBC)
01	Analog channel type
FF	Scale factor type
0000	Scale factor offset in *Fast Meter* message
564341000000	Analog channel name (VCA)
01	Analog channel type
FF	Scale factor type
0000	Scale factor offset in *Fast Meter* message

564E00000000	Analog channel name (VN)
01	Analog channel type
FF	Scale factor type
0000	Scale factor offset in *Fast Meter* message
465245510000	Analog channel name (FREQ)
01	Analog channel type
FF	Scale factor type
0000	Scale factor offset in *Fast Meter* message
564443000000	Analog channel name (VDC)
01	Analog channel type
FF	Scale factor type
0000	Scale factor offset in *Fast Meter* message
526600000000	Analog channel name (Rf)
01	Analog channel type (float)
FF	Scale factor type (no scale factor)
0000	Scale factor offset in *Fast Meter* message (not used)
0x	Line Configuration Sum of one value for each group: Group 1 (x = 0 - ABC, x = 1 - ACB) Group 2 (x = 0 - Y connected, x = 2 - D connected)
0x	Standard Power Calculations (x = 0 if DELTA_Y = Y, x = 1 if DELTA_Y = D)
FFFF	No Deskew angle
FFFF	No Rs compensation
FFFF	No Xs compensation
00	IA channel index
01	IB channel index
02	IC channel index
04	VA channel index
05	VB channel index
06	VC channel index
00	Reserved
checksum	1-byte checksum of all preceding bytes

<u>For Rf Values</u>:

0.0–20000.0	Rf readings are valid
Rf < 0 (neg)	Rf readings are invalid, check: • If Relay Word bit (64FFLT = 1) Rf failure occurred • Else 64F element turned off

In response to the A5C1 request, SEL-300G1 Relays send the following block:

Data	Description
A5C1	*Fast Meter* command
AC	Length
01	One status flag byte
00	Scale factors in *Fast Meter* message
00	No scale factors
0E	# of analog input channels

02	# of samples per channel
3A	# of digital banks
01	# of calculation blocks
0004	Analog channel offset
0074	Time stamp offset
007C	Digital offset
494100000000	Analog channel name (IA)
01	Analog channel type
FF	Scale factor type
0000	Scale factor offset in *Fast Meter* message
494200000000	Analog channel name (IB)
01	Analog channel type
FF	Scale factor type
0000	Scale factor offset in *Fast Meter* message
494300000000	Analog channel name (IC)
01	Analog channel type
FF	Scale factor type
0000	Scale factor offset in *Fast Meter* message
494E00000000	Analog channel name (IN)
01	Analog channel type
FF	Scale factor type
0000	Scale factor offset in *Fast Meter* message

When relay setting DELTA_Y = Y:

564100000000	Analog channel name (VA)
01	Analog channel type
FF	Scale factor type
0000	Scale factor offset in *Fast Meter* message
564200000000	Analog channel name (VB)
01	Analog channel type
FF	Scale factor type
0000	Scale factor offset in *Fast Meter* message
564300000000	Analog channel name (VC)
01	Analog channel type
FF	Scale factor type
0000	Scale factor offset in *Fast Meter* message

When relay setting DELTA_Y = D:

564142000000	Analog channel name (VAB)
01	Analog channel type
FF	Scale factor type
0000	Scale factor offset in *Fast Meter* message
564243000000	Analog channel name (VBC)
01	Analog channel type
FF	Scale factor type
0000	Scale factor offset in *Fast Meter* message
564341000000	Analog channel name (VCA)
01	Analog channel type

FF	Scale factor type
0000	Scale factor offset in *Fast Meter* message
564E00000000	Analog channel name (VN)
01	Analog channel type
FF	Scale factor type
0000	Scale factor offset in *Fast Meter* message
494138370000	Analog channel name (IA87)
01	Analog channel type
FF	Scale factor type
0000	Scale factor offset in *Fast Meter* message
494238370000	Analog channel name (IB87)
01	Analog channel type
FF	Scale factor type
0000	Scale factor offset in *Fast Meter* message
494338370000	Analog channel name (IC87)
01	Analog channel type
FF	Scale factor type
0000	Scale factor offset in *Fast Meter* message
465245510000	Analog channel name (FREQ)
01	Analog channel type
FF	Scale factor type
0000	Scale factor offset in *Fast Meter* message
564443000000	Analog channel name (VDC)
01	Analog channel type
FF	Scale factor type
0000	Scale factor offset in *Fast Meter* message
526600000000	Analog channel name (Rf)
01	Analog channel type (float)
FF	Scale factor type (no scale factor)
0000	Scale factor offset in *Fast Meter* message (not used)
0x	Line Configuration Sum of one value for each group: Group 1 (x = 0 - ABC, x = 1 - ACB) Group 2 (x = 0 - Y connected, x = 2 - D connected)
0x	Standard Power Calculations (x = 0 if DELTA_Y = Y, x = 1 if DETLA_Y = D)
FFFF	No Deskew angle
FFFF	No Rs compensation
FFFF	No Xs compensation
00	IA channel index
01	IB channel index
02	IC channel index
04	VA channel index
05	VB channel index
06	VC channel index
00	Reserved
checksum	1-byte checksum of all preceding bytes

For Rf Values:

0.0–20000.0	Rf readings are valid
Rf < 0 (neg)	Rf readings are invalid, check: • If Relay Word bit (64FFLT = 1) Rf failure occurred • Else 64F element turned off

In response to the A5C1 request, SEL-300G2 Relays send the following block:

Data	Description
A5C1	*Fast Meter* command
98	Length
01	One status flag byte
00	Scale factors in *Fast Meter* message
00	No scale factors
0C	# of analog input channels
02	# of samples per channel
3A	# of digital banks
01	# of calculation blocks
0004	Analog channel offset
0064	Time stamp offset
006C	Digital offset
494100000000	Analog channel name (IA)
01	Analog channel type
FF	Scale factor type
0000	Scale factor offset in *Fast Meter* message
494200000000	Analog channel name (IB)
01	Analog channel type
FF	Scale factor type
0000	Scale factor offset in *Fast Meter* message
494300000000	Analog channel name (IC)
01	Analog channel type
FF	Scale factor type
0000	Scale factor offset in *Fast Meter* message
494E00000000	Analog channel name (IN)
01	Analog channel type
FF	Scale factor type
0000	Scale factor offset in *Fast Meter* message

When relay setting DELTA_Y = Y:

564100000000	Analog channel name (VA)
01	Analog channel type
FF	Scale factor type
0000	Scale factor offset in *Fast Meter* message
564200000000	Analog channel name (VB)
01	Analog channel type
FF	Scale factor type
0000	Scale factor offset in *Fast Meter* message
564300000000	Analog channel name (VC)
01	Analog channel type

FF	Scale factor type
0000	Scale factor offset in *Fast Meter* message

When relay setting DELTA_Y = D:

564142000000	Analog channel name (VAB)
01	Analog channel type
FF	Scale factor type
0000	Scale factor offset in *Fast Meter* message
564243000000	Analog channel name (VBC)
01	Analog channel type
FF	Scale factor type
0000	Scale factor offset in *Fast Meter* message
564341000000	Analog channel name (VCA)
01	Analog channel type
FF	Scale factor type
0000	Scale factor offset in *Fast Meter* message
565300000000	Analog channel name (VS)
01	Analog channel type
FF	Scale factor type
0000	Scale factor offset in *Fast Meter* message
564E00000000	Analog channel name (VN)
01	Analog channel type
FF	Scale factor type
0000	Scale factor offset in *Fast Meter* message
465245510000	Analog channel name (FREQ)
01	Analog channel type
FF	Scale factor type
0000	Scale factor offset in *Fast Meter* message
564443000000	Analog channel name (VDC)
01	Analog channel type
FF	Scale factor type
0000	Scale factor offset in *Fast Meter* message
526600000000	Analog channel name (Rf)
01	Analog channel type (float)
FF	Scale factor type (no scale factor)
0000	Scale factor offset in *Fast Meter* message (not used)
0x	Line Configuration Sum of one value for each group: Group 1 (x = 0 - ABC, x = 1 - ACB) Group 2 (x = 0 - Y connected, x = 2 - D connected)
0x	Standard Power Calculations (x = 0 if DELTA_Y = Y, x = 1 if DELTA_Y = D)
FFFF	No Deskew angle
FFFF	No Rs compensation
FFFF	No Xs compensation
00	IA channel index
01	IB channel index
02	IC channel index

04	VA channel index
05	VB channel index
06	VC channel index
00	Reserved
checksum	1-byte checksum of all preceding bytes

For Rf Values:

0.0–20000.0	Rf readings are valid
Rf < 0 (neg)	Rf readings are invalid, check: • If Relay Word bit (64FFLT = 1) Rf failure occurred • Else 64F element turned off

In response to the A5C1 request, SEL-300G3 Relays send the following block:

Data	Description
A5C1	*Fast Meter* command
B6	Length
01	One status flag byte
00	Scale factors in *Fast Meter* message
00	No scale factors
0F	# of analog input channels
02	# of samples per channel
3A	# of digital banks
01	# of calculation blocks
0004	Analog channel offset
007C	Time stamp offset
0084	Digital offset
494100000000	Analog channel name (IA)
01	Analog channel type
FF	Scale factor type
0000	Scale factor offset in *Fast Meter* message
494200000000	Analog channel name (IB)
01	Analog channel type
FF	Scale factor type
0000	Scale factor offset in *Fast Meter* message
494300000000	Analog channel name (IC)
01	Analog channel type
FF	Scale factor type
0000	Scale factor offset in *Fast Meter* message
494E00000000	Analog channel name (IN)
01	Analog channel type
FF	Scale factor type
0000	Scale factor offset in *Fast Meter* message

When relay setting DELTA_Y = Y:

564100000000	Analog channel name (VA)
01	Analog channel type
FF	Scale factor type

0000	Scale factor offset in *Fast Meter* message
564200000000	Analog channel name (VB)
01	Analog channel type
FF	Scale factor type
0000	Scale factor offset in *Fast Meter* message
564300000000	Analog channel name (VC)
01	Analog channel type
FF	Scale factor type
0000	Scale factor offset in *Fast Meter* message

When relay setting DELTA_Y = D:

564142000000	Analog channel name (VAB)
01	Analog channel type
FF	Scale factor type
0000	Scale factor offset in *Fast Meter* message
564243000000	Analog channel name (VBC)
01	Analog channel type
FF	Scale factor type
0000	Scale factor offset in *Fast Meter* message
564341000000	Analog channel name (VCA)
01	Analog channel type
FF	Scale factor type
0000	Scale factor offset in *Fast Meter* message

565300000000	Analog channel name (VS)
01	Analog channel type
FF	Scale factor type
0000	Scale factor offset in *Fast Meter* message
564E00000000	Analog channel name (VN)
01	Analog channel type
FF	Scale factor type
0000	Scale factor offset in *Fast Meter* message
494138370000	Analog channel name (IA87)
01	Analog channel type
FF	Scale factor type
0000	Scale factor offset in *Fast Meter* message
494238370000	Analog channel name (IB87)
01	Analog channel type
FF	Scale factor type
0000	Scale factor offset in *Fast Meter* message
494338370000	Analog channel name (IC87)
01	Analog channel type
FF	Scale factor type
0000	Scale factor offset in *Fast Meter* message
465245510000	Analog channel name (FREQ)
01	Analog channel type
FF	Scale factor type
0000	Scale factor offset in *Fast Meter* message

564443000000	Analog channel name (VDC)
01	Analog channel type
FF	Scale factor type
0000	Scale factor offset in *Fast Meter* message
526600000000	Analog channel name (Rf)
01	Analog channel type (float)
FF	Scale factor type (no scale factor)
0000	Scale factor offset in *Fast Meter* message (not used)
0x	Line Configuration Sum of one value for each group: Group 1 (x = 0 - ABC, x = 1 - ACB) Group 2 (x = 0 - Y connected, x = 2 - D connected)
0x	Standard Power Calculations (x = 0 if DELTA_Y = Y, x = 1 if DELTA_Y = D)
FFFF	No Deskew angle
FFFF	No Rs compensation
FFFF	No Xs compensation
00	IA channel index
01	IB channel index
02	IC channel index
04	VA channel index
05	VB channel index
06	VC channel index
00	Reserved
checksum	1-byte checksum of all preceding bytes

For Rf Values:

0.0–20000.0	Rf readings are valid
Rf < 0 (neg)	Rf readings are invalid, check: • If Relay Word bit (64FFLT = 1) Rf failure occurred • Else 64F element turned off

A5D1 *Fast Meter* Data Block

In response to the A5D1 request, Model SEL-0300G0 Relay sends the following block:

Data	Description
A5D1	Command
A0	Length
1-byte	1 Status Byte
88-bytes	X and Y components of: IA, IB, IC, IN, VA, VB, VC, VN, Freq, Vdc, and Rf in 4-byte IEEE FPS
8-bytes	Time stamp
58-bytes	58 Digital banks: TAR0–TAR57
1-byte	Reserved
checksum	1-byte checksum of all preceding bytes

In response to the A5D1 request, Model SEL-0300G1 Relays send the following block:

Data	Description
A5D1	Command
B8	Length
1-byte	1 Status Byte
112-bytes	X and Y components of: IA, IB, IC, IN, VA, VB, VC, VN, IA87, IB87, IC87, Freq, Vdc, and Rf in 4-byte IEEE FPS
8-bytes	Time stamp
58-bytes	58 Digital banks: TAR0–TAR57
1-byte	Reserved
checksum	1-byte checksum of all preceding bytes

In response to the A5D1 request, Model SEL-0300G2 Relay sends the following block:

Data	Description
A5D1	Command
A8	Length
1-byte	1 Status Byte
96-bytes	X and Y components of: IA, IB, IC, IN, VA, VB, VC,VS, VN, Freq, Vdc, and Rf in 4-byte IEEE FPS
8-bytes	Time stamp
58-bytes	58 Digital banks: TAR0–TAR57
1-byte	Reserved
checksum	1-byte checksum of all preceding bytes

In response to the A5D1 request, Model SEL-0300G3 Relays send the following block:

Data	Description
A5D1	Command
C0	Length
1-byte	1 Status Byte
120-bytes	X and Y components of: IA, IB, IC, IN, VA, VB, VC, VS, VN, IA87, IB87, IC87, Freq, Vdc, and Rf in 4-byte IEEE FPS
8-bytes	Time stamp
58-bytes	58 Digital banks: TAR0–TAR57
1-byte	Reserved
checksum	1-byte checksum of all preceding bytes

A5C2/A5C3 Demand/Peak Demand *Fast Meter* Configuration Messages

In response to the A5C2 or A5C3 request, the relay sends the following block:

Data	Description
A5C2 or A5C3	Command; Demand (A5C2) or Peak Demand (A5C3)
EE	Length
01	# of status flag bytes
00	Scale factors in meter message
00	# of scale factors
16	# of analog input channels
01	# of samples per channel
00	# of digital banks

00	# of calculation blocks
0004	Analog channel offset
00B4	Time stamp offset
FFFF	Digital offset
494100000000	Analog channel name (IA)
02	Analog channel type
FF	Scale factor type
0000	Scale factor offset in *Fast Meter* message
494200000000	Analog channel name (IB)
02	Analog channel type
FF	Scale factor type
0000	Scale factor offset in *Fast Meter* message
494300000000	Analog channel name (IC)
02	Analog channel type
FF	Scale factor type
0000	Scale factor offset in *Fast Meter* message
494E00000000	Analog channel name (IN)
02	Analog channel type
FF	Scale factor type
0000	Scale factor offset in *Fast Meter* message
494700000000	Analog channel name (IG)
02	Analog channel type
FF	Scale factor type
0000	Scale factor offset in *Fast Meter* message
334932000000	Analog channel name (3I2)
02	Analog channel type
FF	Scale factor type
0000	Scale factor offset in *Fast Meter* message
50412B000000	Analog channel name (PA+)
02	Analog channel type
FF	Scale factor type
0000	Scale factor offset in *Fast Meter* message
50422B000000	Analog channel name (PB+)
02	Analog channel type
FF	Scale factor type
0000	Scale factor offset in *Fast Meter* message
50432B000000	Analog channel name (PC+)
02	Analog channel type
FF	Scale factor type
0000	Scale factor offset in *Fast Meter* message
50332B000000	Analog channel name (P3+)
02	Analog channel type
FF	Scale factor type
0000	Scale factor offset in *Fast Meter* message
51412B000000	Analog channel name (QA+)
02	Analog channel type
FF	Scale factor type
0000	Scale factor offset in *Fast Meter* message
51422B000000	Analog channel name (QB+)

02	Analog channel type
FF	Scale factor type
0000	Scale factor offset in *Fast Meter* message
51432B000000	Analog channel name (QC+)
02	Analog channel type
FF	Scale factor type
0000	Scale factor offset in *Fast Meter* message
51332B000000	Analog channel name (Q3+)
02	Analog channel type
FF	Scale factor type
0000	Scale factor offset in *Fast Meter* message
50412D000000	Analog channel name (PA-)
02	Analog channel type
FF	Scale factor type
0000	Scale factor offset in *Fast Meter* message
50422D000000	Analog channel name (PB-)
02	Analog channel type
FF	Scale factor type
0000	Scale factor offset in *Fast Meter* message
50432D000000	Analog channel name (PC-)
02	Analog channel type
FF	Scale factor type
0000	Scale factor offset in *Fast Meter* message
50332D000000	Analog channel name (P3-)
02	Analog channel type
FF	Scale factor type
0000	Scale factor offset in *Fast Meter* message
51412D000000	Analog channel name (QA-)
02	Analog channel type
FF	Scale factor type
0000	Scale factor offset in *Fast Meter* message
51422D000000	Analog channel name (QB-)
02	Analog channel type
FF	Scale factor type
0000	Scale factor offset in *Fast Meter* message
51432D000000	Analog channel name (QC-)
02	Analog channel type
FF	Scale factor type
0000	Scale factor offset in *Fast Meter* message
51332D000000	Analog channel name (Q3-)
02	Analog channel type
FF	Scale factor type
0000	Scale factor offset in *Fast Meter* message
00	Reserved
checksum	1-byte checksum of preceding bytes

A5D2/A5D3 Demand/Peak Demand *Fast Meter* Message

In response to the A5D2 or A5D3 request, the relay sends the following block:

Data	Description
A5D2 or A5D3	Command
BE	Length
1-byte	1 Status Byte
176-bytes	Demand: IA, IB, IC, IN, IG, 3I2, MWA I, MWB I, MWC I, MW3PI, MVA I, MVB I, MVC I, MV3PI, MWA O, MWB O, MWC O, MW3PO, MVA O, MVB O, MVC O, MV3PO in 8-byte IEEE FPS
8-bytes	Time stamp
1-byte	Reserved
1-byte	1-byte checksum of all preceding bytes

A5B9 *Fast Meter* Status Acknowledge Message

In response to the A5B9 request, the relay clears the *Fast Meter* (message A5D1) Status Byte. The SEL-300G Status Byte contains one active bit, STSET (bit 4). The bit is set on power up and on settings changes. If the STSET bit is set, the external device should request the A5C1, A5C2, and A5C3 messages. The external device can then determine if the scale factors or line configuration parameters have been modified.

A5CE *Fast Operate* Configuration Block

In response to the A5CE request, the relay sends the following block:

Data	Description
A5CE	Command
3C	Length
01	Support 1 circuit breaker
0010	Support 16 remote bit set/clear commands
01	Allow remote bit pulse commands
00	Reserved
31	Operate code, open breaker (OC1)
11	Operate code, close breaker (CC)
00	Operate code, clear remote bit RB1
20	Operate code, set remote bit RB1
40	Operate code, pulse remote bit RB1
01	Operate code, clear remote bit RB2
21	Operate code, set remote bit RB2
41	Operate code, pulse remote bit RB2
02	Operate code, clear remote bit RB3
22	Operate code, set remote bit RB3
42	Operate code, pulse remote bit RB3
03	Operate code, clear remote bit RB4
23	Operate code, set remote bit RB4
43	Operate code, pulse remote bit RB4
04	Operate code, clear remote bit RB5
24	Operate code, set remote bit RB5

44	Operate code, pulse remote bit RB5
05	Operate code, clear remote bit RB6
25	Operate code, set remote bit RB6
45	Operate code, pulse remote bit RB6
06	Operate code, clear remote bit RB7
26	Operate code, set remote bit RB7
46	Operate code, pulse remote bit RB7
07	Operate code, clear remote bit RB8
27	Operate code, set remote bit RB8
47	Operate code, pulse remote bit RB8
08	Operate code, clear remote bit RB9
28	Operate code, set remote bit RB9
48	Operate code, pulse remote bit RB9
09	Operate code, clear remote bit RB10
29	Operate code, set remote bit RB10
49	Operate code, pulse remote bit RB10
0A	Operate code, clear remote bit RB11
2A	Operate code, set remote bit RB11
4A	Operate code, pulse remote bit RB11
0B	Operate code, clear remote bit RB12
2B	Operate code, set remote bit RB12
4B	Operate code, pulse remote bit RB12
0C	Operate code, clear remote bit RB13
2C	Operate code, set remote bit RB13
4C	Operate code, pulse remote bit RB13
0D	Operate code, clear remote bit RB14
2D	Operate code, set remote bit RB14
4D	Operate code, pulse remote bit RB14
0E	Operate code, clear remote bit RB15
2E	Operate code, set remote bit RB15
4E	Operate code, pulse remote bit RB15
0F	Operate code, clear remote bit RB16
2F	Operate code, set remote bit RB16
4F	Operate code, pulse remote bit RB16
00	Reserved
checksum	1-byte checksum of all preceding bytes

A5E0 *Fast Operate* Remote Bit Control

The external device sends the following message to perform a remote bit operation:

Data	Description
A5E0	Command
06	Length
1-byte	Operate code: 00–0F clear remote bit RB1–RB16 20–2F set remote bit RB1–RB16 40–4F pulse remote bit for RB1–RB16 for one processing interval
1-byte	Operate validation: 4 • Operate code + 1

checksum	1-byte checksum of preceding bytes

The relay performs the specified remote bit operation if the following conditions are true:

The Operate code is valid.
The Operate validation = 4 • Operate code + 1.
The message checksum is valid.
The FASTOP port setting is set to Y.
The relay is enabled.

Remote bit set and clear operations are latched by the relay. Remote bit pulse operations assert the remote bit for one processing interval (1/4 cycle).

It is common practice to route remote bits to output contacts to provide remote control of the relay outputs. If you wish to pulse an output contact closed for a specific duration, SEL recommends using the remote bit pulse command and SELOGIC® control equations to provide secure and accurate contact control. The remote device sends the remote bit pulse command; the relay controls the timing of the output contact assertion. You can use any remote bit (RB1 through RB16) and any SELOGIC control equation timer (SV1 through SV16) to control any of the output contacts (OUT101 through OUT107). For example, to pulse output contact OUT104 for 30 cycles with Remote Bit RB4 and SELOGIC control equation timer SV4, issue the following relay settings:

via the **SET L** command,	
SV4 = RB4	SV4 input is RB4
OUT104 = SV4T	route SV4 timer output to OUT104
via the **SET** command,	
SV4PU = 0	SV4 pickup time = 0
V4DO = 30	SV4 dropout time is 30 cycles

To pulse the contact, send the A5E006430DDB command to the relay.

A5E3 *Fast Operate* Breaker Control

The external device sends the following message to perform a fast breaker open/close:

Data	Description
A5E3	Command
06	Length
1-byte	Operate code:
	31 - OPEN breaker (OC1)
	11 - CLOSE breaker
1-byte	Operate Validation: 4 • Operate code + 1
checksum	1-byte checksum of preceding bytes

The relay performs the specified breaker operation if the following conditions are true:

Conditions 1–5 defined in the A5E0 message are true.
The breaker jumper (JMP6B) is in place on the SEL-300G main board.

ID Message

In response to the ID command, the relay sends the firmware ID, relay TID setting, and the Modbus® device code as described below.

<STX>"FID=SEL-300G-Rrrr-Vvvvvvvvvvv-Zzzzzzz-Dyyyymmdd","aaaa"<CR>
"BFID=SELboot-3xx-Rrrr"," aaaa "<CR>
"CID=cccc"," aaaa "<CR>
"DEVID=[TID SETTING]"," aaaa "<CR>
"DEVCODE=33"," aaaa "<CR>
"PARTNO=[PARTNO SETTING]"," aaaa "<CR>
"CONFIG=bbbbbb"," aaaa "<CR>
"SPECIAL="," aaaa "<CR>
<ETX>

where	<STX>	is the STX character (02)
	FID	is the Firmware identification string.
	rrr	is the firmware revision.
	zzzzzz	is setting and protocol version numbers.
	yyyymmdd	are 4-digit year, 2-digit month, and 2-digit day codes.
	aaaa	is the 4-byte ASCII hex representation of the checksum for each line.
	BFID	is the Boot Firmware Identification string.
	CID	is the 4-digit hexadecimal checksum of the firmware.
	cccc	is the 4-digit firmware checksum.
	DEVCODE	is the Modbus Device ID Code for the SEL-300G.
	PARTNO	is the part number that matches the Model Option Table number.
	CONFIG	is configuration string for SEL internal use only.
	bbbbbb	is the 6-digit configuration code.
	SPECIAL	is Special Configuration Designators for future use.
	<ETX>	is the ETX character (03).

The ID message is available from Access Level 0 and higher.

DNA Message

In response to the Access Level 1 DNA command, the relay sends names of the Relay Word bits transmitted in the A5D1 message. The first name is associated with the MSB, the last name with the LSB. See ***Section 4:*** *Error! AutoText entry not defined.* ***Control Equations*** for detailed descriptions of the Relay Word Bits. Model SEL-0300G31 DNA message is:

<STX>"EN","BKR","LOP","TRIP","21/51V","50","51","N","0983"
"24","27/59","32","40","46","64G","81","87","07A8"
"24TC","24D1","24D1T","24C2","24C2T","24CR","SS1","SS2","0B3B"
"27P1","27P2","27PP1","27V1","59P1","59P2","59G1","59G2","0B2B"
"32PTC","32P1","32P1T","32P2","32P2T","59V1","59Q","59PP1","0C01"
"40ZTC","40Z1","40Z1T","40Z2","40Z2T","SWING","SG1","SG2","0C5A"
"46QTC","46Q1","46Q1T","46Q2","46Q2T","46Q2R","INAD","INADT","0CF7"
"78R1","78R2","78Z1","OOSTC","51CTC","51C","51CT","51CR","0BC8"
"51GTC","51G","51GT","51GR","51NTC","51N","51NT","51NR","0B7E"
"51VTC","51V","51VT","51VR","PDEM","QDEM","GDEM","NDEM","0C3B"
"50P1","50P1T","50P2","50P2T","50G1","50G1T","50G2","50G2T","0BE0"
"50N1","50N1T","50N2","50N2T","CC","CL","CLOSE","ULCL","0B75"

"64GTC","64G1","64G1T","64G2","64G2T","OOS","60LOP","CLEN","0C5E"
"BKMON","BCW","BCWA","BCWB","BCWC","FAULT","DCLO","DCHI","0CE3"
"81D1","81D2","81D3","81D4","81D5","81D6","3PO","52A","0A3D"
"81D1T","81D2T","81D3T","81D4T","81D5T","81D6T","27B81","50L","0C80"
"ONLINE","BND1A","BND1T","BND2A","BND2T","BND3A","BND3T","BNDA","0E3D"
"TRGTR","BND4A","BND4T","BND5A","BND5T","BND6A","BND6T","BNDT","0E30"
"TRIP","TRIP1","TRIP2","TRIP3","TRIP4","OC1","OC2","OC3","0CD1"
"TR1","TR2","TR3","TR4","ULTR1","ULTR2","ULTR3","ULTR4","0CC8"
"LB1","LB2","LB3","LB4","LB5","LB6","LB7","LB8","0994"
"LB9","LB10","LB11","LB12","LB13","LB14","LB15","LB16","0AE5"
"RB1","RB2","RB3","RB4","RB5","RB6","RB7","RB8","09C4"
"RB9","RB10","RB11","RB12","RB13","RB14","RB15","RB16","0B15"
"21CTC","21C1P","21C1T","21C2P","21C2T","ZLOAD","T64G","N64G","0CE1"
"SV1","SV2","SV3","SV4","SV1T","SV2T","SV3T","SV4T","0BAC"
"SV5","SV6","SV7","SV8","SV5T","SV6T","SV7T","SV8T","0BCC"
"SV9","SV10","SV11","SV12","SV9T","SV10T","SV11T","SV12T","0CD6"
"SV13","SV14","SV15","SV16","SV13T","SV14T","SV15T","SV16T","0D44"
"DP8","DP7","DP6","DP5","DP4","DP3","DP2","DP1","09C4"
"DP16","DP15","DP14","DP13","DP12","DP11","DP10","DP9","0B15"
"ER","OOST","IN106","IN105","IN104","IN103","IN102","IN101","0C61"
"ALARM","OUT107","OUT106","OUT105","OUT104","OUT103","OUT102","OUT101",
"0FC8"
"87B","87BL1","87BL2","87BL3","87R","87R1","87R2","87R3","0B58"
"87U","87U1","87U2","87U3","50H1","50H1T","50H2","50H2T","0B48"
"50Q1","50Q1T","50Q2","50Q2T","50R1","50R1T","50R2","50R2T","0C10"
"59VP","59VS","CFA","BKRCF","BSYNCH","25C","25A1","25A2","0C01"
"59PP2","27PP2","SF","VDIF","GENVHI","GENVLO","GENFHI","GENFLO","0EB5"
"*","*","*","*","*","MPP1P","MABC1P","27VS","0866"
"21PTC","21P1P","21P1T","21P2P","21P2T","MPP2P","MABC2P","*","0CD2"
"IN208","IN207","IN206","IN205","IN204","IN203","IN202","IN201","0CEC"
"*","*","*","*","*","*","*","*","04D0"
"OUT201","OUT202","OUT203","OUT204","OUT205","OUT206","OUT207","OUT208",
"0FF4"
"OUT209","OUT210","OUT211","OUT212","*","*","*","*","0A5F"
"50H2A","50H2B","50H2C","*","*","*","*","*","07B5"
"*","*","*","*","*","*","*","*","04D0"
"SET1","SET2","SET3","SET4","SET5","SET6","SET7","SET8","0C84"
"SET9","SET10","SET11","SET12","SET13","SET14","SET15","SET16","0DD5"
"RST1","RST2","RST3","RST4","RST5","RST6","RST7","RST8","0CEC"
"RST9","RST10","RST11","RST12","RST13","RST14","RST15","RST16","0E3D"
"LT1","LT2","LT3","LT4","LT5","LT6","LT7","LT8","0A24"
"LT9","LT10","LT11","LT12","LT13","LT14","LT15","LT16","0B75"
"OTHTRIP","OTHALRM","AMBTRIP","AMBALRM","BRGTRIP","BRGALRM",
"WDGTRIP","WDGALRM","141C"
"RTDFLT","*","*","*","*","*","*","2600IN","07AB"
"RTD4TR","RTD4AL","RTD3TR","RTD3AL","RTD2TR","RTD2AL","RTD1TR","RTD1AL",
"1130"
"RTD8TR","RTD8AL","RTD7TR","RTD7AL","RTD6TR","RTD6AL","RTD5TR","RTD5AL",
"1150"

"RTD12TR","RTD12AL","RTD11TR","RTD11AL","RTD10TR","RTD10AL","RTD9TR",
"RTD9AL","125A"
"*","*","*","*","*","*","*","*","04D0"

Messages for other relay models may be derived from Table 4.6: SEL-300G Relay Word Bits of this manual, using the above format.

BNA Message

In response to the **BNA** command, the relay sends names of the bits transmitted in the Status Byte in the A5D1 message. The first name is the MSB; the last name is the LSB. The BNA message is:

<STX>"*","*","*","STSET","*","*","*","*","yyyy"<ETX>

where: "yyyy" is the 4-byte ASCII representation of the checksum.

"*" indicates an unused bit location.

The **BNA** command is available from Access Level 1 and higher.

APPENDIX E: COMPRESSED ASCII COMMANDS

INTRODUCTION

The SEL-300G provides Compressed ASCII versions of certain ASCII commands in the relay. The Compressed ASCII commands allow an external device to obtain data from the relay in a format which directly imports into spreadsheet or database programs and that can be validated with a checksum.

The SEL-300G provides the following Compressed ASCII commands:

Command	Description
CASCII	Configuration message
CSTATUS	Status message
CHISTORY	History message
CEVENT	Event message

CASCII COMMAND—GENERAL FORMAT

The Compressed ASCII configuration message provides data for an external computer to extract data from other Compressed ASCII commands. To obtain the configuration message for the Compressed ASCII commands available in an SEL relay, type:

CAS <CR>

The relay sends:

<STX>"CAS",n,"yyyy"<CR>
"COMMAND 1",ll,"yyyy"<CR>
"#H","xxxxx","xxxxx",.....,"xxxxx","yyyy"<CR>
"#D","ddd","ddd","ddd","ddd",.....,"ddd","yyyy"<CR>
"COMMAND 2",ll,"yyyy"<CR>
"#h","ddd","ddd",.....,"ddd","yyyy"<CR>
"#D","ddd","ddd","ddd","ddd",.....,"ddd","yyyy"<CR>
•
•
•
"COMMAND n",ll,"yyyy"<CR>
"#H","xxxxx","xxxxx",.....,"xxxxx","yyyy"<CR>
"#D","ddd","ddd","ddd","ddd",.....,"ddd","yyyy"<CR><ETX>

where:	n	is the number of Compressed ASCII command descriptions to follow.
	COMMAND	is the ASCII name for the Compressed ASCII command as sent by the requesting device. The naming convention for the Compressed ASCII commands is a 'C' preceding the typical command. For example, CSTATUS (abbreviated to CST) is the compressed STATUS command.
	ll	is the minimum access level at which the command is available.

#H	identifies a header line to precede one or more data lines; '#' is the number of subsequent ASCII names. For example, “21H” identifies a header line with 21 ASCII labels.
#h	identifies a header line to precede one or more data lines; '#' is the number of subsequent format fields. For example, “8h” identifies a header line with 8 format fields.
xxxxx	is an ASCII name for corresponding data on following data lines. Maximum ASCII name width is 10 characters.
#D	identifies a data format line; '#' is the maximum number of subsequent data lines.
ddd	identifies a format field containing one of the following type designators: I Integer data F Floating point data mS String of maximum m characters (e.g., 10S for a 10 character string)
yyyy	is the 4-byte hex ASCII representation of the checksum.

A Compressed ASCII command may require multiple header and data configuration lines.

If a Compressed ASCII request is made for data that are not available (e.g., the history buffer is empty or invalid event request), the relay responds with the following message:

<STX>"No Data Available","0668"<CR><ETX>

CASCII COMMAND—SEL-300G

Display the SEL-300G Compressed ASCII configuration message by sending:

CAS <CR>

Model SEL-0300G0 Relay sends:

<STX>
"**CAS**",5,"yyyy"<CR>
"**CST**",1,"yyyy"<CR>
"1H","FID","yyyy"<CR>
"1D","46S","yyyy"<CR>
"7H","MONTH","DAY","YEAR","HOUR","MIN","SEC","MSEC","yyyy"<CR>
"1D","I","I","I","I","I","I","I","yyyy",<CR>
"27H","IA","IB","IC","IN","VA","VB","VC","VN","MOF","*","*","*","*","+5V_PS",
"+5V_REG",
"-5V_REG","+12V_PS","-12V_PS","+15V_PS","-15V_PS","TEMP","RAM","ROM",
"A/D","CR_RAM","EEPROM","IO_BRD","yyyy"<CR>
"1D","9S","9S","9S","9S","9S","9S","9S","9S","9S","9S","9S","9S","9S","9S","9S","9S",
"9S","9S","9S","9S","9S","9S","yyyy"<CR>
"**CHI**",1,"yyyy"<CR>
"1H","FID","yyyy"<CR>
"1D","46S","yyyy"<CR>

"13H","REC_NUM","MONTH","DAY","YEAR","HOUR","MIN","SEC","MSEC","EVENT",
"CURR","FREQ","GROUP","TARGETS","yyyy"<CR>
"30D","I","I","I","I","I","I","I","I","6S","I","F","I","56S","yyyy"<CR>
"**CEV**",1,"yyyy"<CR>
"1H","FID","yyyy"<CR>
"1D","46S","yyyy"<CR>
"7H","MONTH","DAY","YEAR","HOUR","MIN","SEC","MSEC","yyyy"<CR>
"1D","I","I","I","I","I","I","I","yyyy"<CR>
"15H","FREQ","SAM/CYC_A","SAM/CYC_D","NUM_OF_CYC","EVENT","TARGETS",
"IA","IB","IC","IN","IG","3I2","*","*","*","yyyy"<CR>
"1D","F","I","I","I","6S","56S","I","I","I","I","I","I","I","I","I","yyyy"<CR>
"14H","IA","IB","IC","IN","IG","VA(kV)","VB(kV)","VC(kV)","VN(kV)","*","VDC",
"FREQ","TRIG ","***Names of elements in the relay word rows 2–57 separated by spaces***","yyyy"<CR>
"60D","I","I","I","I","I","F","F","F","F","F","I","F","2S","88S","yyyy"<CR>
"**CEV C**",1,"yyyy"<CR>
"1H","FID","yyyy"<CR>
"1D","46S","yyyy"<CR>
"7H","MONTH","DAY","YEAR","HOUR","MIN","SEC","MSEC","yyyy"<CR>
"1D","I","I","I","I","I","I","I","yyyy",<CR>
"15H","FREQ","SAM/CYC_A","SAM/CYC_D","NUM_OF_CYC","EVENT","TARGETS",
"IA","IB","IC","IN","IG","3I2","*","*","*","yyyy"<CR>
"1D","F","I","I","I","6S","56S","I","I","I","I","I","I","I","I","I","yyyy"<CR>
"14H","IA","IB","IC","IN","IG","VA(kV)","VB(kV)","VC(kV)","VN(kV)", "*","VDC",
"FREQ","TRIG ","***Names of elements in the relay word rows 2–57 separated by spaces***","yyyy"<CR>
"240D","I","I","I","I","I","F","F","F","F","F","I","F","2S","88S","yyyy"<CR>
"**CEV R**",1,"yyyy"<CR>
"1H","FID","yyyy"<CR>
"1D","46S","yyyy"<CR>
"7H","MONTH","DAY","YEAR","HOUR","MIN","SEC","MSEC","yyyy"<CR>
"1D","I","I","I","I","I","I","I","yyyy",<CR>
"15H","FREQ","SAM/CYC_A","SAM/CYC_D","NUM_OF_CYC","EVENT","TARGETS",
"IA","IB","IC","IN","IG","3I2","*","*","*","yyyy"<CR>
"1D","F","I","I","I","6S","56S","I","I","I","I","I","I","I","I","I","yyyy"<CR>
"14H","IA","IB","IC","IN","IG","VA(kV)","VB(kV)","VC(kV)","VN(kV)", "*","VDC",
"FREQ","TRIG ","***Names of elements in the relay word rows 2–57 separated by spaces***","yyyy"<CR>
"256D","I","I","I","I","I","F","F","F","F","F","I","F","2S","88S","yyyy"<CR>
<ETX>

Model SEL-0300G1 Relay sends:

<STX>
"**CAS**",5,"yyyy"<CR>
"**CST**",1,"yyyy"<CR>
"1H","FID","yyyy"<CR>
"1D","46S","yyyy"<CR>
"7H","MONTH","DAY","YEAR","HOUR","MIN","SEC","MSEC","yyyy"<CR>

"1D","I","I","I","I","I","I","I","yyyy",<CR>
"27H","IA","IB","IC","IN","VA","VB","VC","VN","MOF","IA87","IB87","IC87","*",
"+5V_PS","+5V_REG","-5V_REG","+12V_PS","-12V_PS","+15V_PS","-15V_PS","TEMP",
"RAM","ROM","A/D","CR_RAM","EEPROM","IO_BRD","yyyy"<CR>
"1D","9S","9S","9S","9S","9S","9S","9S","9S","9S","9S","9S","9S","9S","9S","9S","9S","9S",
"9S","9S","9S","9S","9S","9S","9S","9S","9S","9S","yyyy"<CR>
"**CHI**",1,"yyyy"<CR>
"1H","FID","yyyy"<CR>
"1D","46S","yyyy"<CR>
"13H","REC_NUM","MONTH","DAY","YEAR","HOUR","MIN","SEC","MSEC","EVENT",
"CURR","FREQ","GROUP","TARGETS","yyyy"<CR>
"30D","I","I","I","I","I","I","I","I","6S","I","F","I","56S","yyyy"<CR>
"**CEV**",1,"yyyy"<CR>
"1H","FID","yyyy"<CR>
"1D","46S","yyyy"<CR>
"7H","MONTH","DAY","YEAR","HOUR","MIN","SEC","MSEC","yyyy"<CR>
"1D","I","I","I","I","I","I","I","yyyy"<CR>
"15H","FREQ","SAM/CYC_A","SAM/CYC_D","NUM_OF_CYC","EVENT","TARGETS",
"IA","IB","IC","IN","IG","3I2","IA87","IB87","IC87","yyyy"<CR>
"1D","F","I","I","I","6S","56S","I","I","I","I","I","I","I","I","I","yyyy"<CR>
"14H","IA","IB","IC","IN","IG","VA(kV)","VB(kV)","VC(kV)","VN(kV)", "*","VDC",
"FREQ","TRIG ","***Names of elements in the relay word rows 2–57 separated by spaces***","yyyy"<CR>
"60D","I","I","I","I","I","F","F","F","F","F","I","F","2S","88S","yyyy"<CR>
"**CEV C**",1,"yyyy"<CR>
"1H","FID","yyyy"<CR>
"1D","46S","yyyy"<CR>
"7H","MONTH","DAY","YEAR","HOUR","MIN","SEC","MSEC","yyyy"<CR>
"1D","I","I","I","I","I","I","I","yyyy",<CR>
"15H","FREQ","SAM/CYC_A","SAM/CYC_D","NUM_OF_CYC","EVENT","TARGETS",
"IA","IB","IC","IN","IG","3I2","IA87","IB87","IC87","yyyy"<CR>
"1D","F","I","I","I","6S","56S","I","I","I","I","I","I","I","I","I","yyyy"<CR>
"14H","IA","IB","IC","IN","IG","VA(kV)","VB(kV)","VC(kV)","VN(kV)", "*","VDC",
"FREQ","TRIG ","***Names of elements in the relay word rows 2–57 separated by spaces***","yyyy"<CR>
"256D","I","I","I","I","I","F","F","F","F","F","I","F","2S","88S","yyyy"<CR>
"**CEV R**",1,"yyyy"<CR>
"1H","FID","yyyy"<CR>
"1D","46S","yyyy"<CR>
"7H","MONTH","DAY","YEAR","HOUR","MIN","SEC","MSEC","yyyy"<CR>
"1D","I","I","I","I","I","I","I","yyyy",<CR>
"15H","FREQ","SAM/CYC_A","SAM/CYC_D","NUM_OF_CYC","EVENT","TARGETS",
"IA","IB","IC","IN","IG","3I2","IA87","IB87","IC87","yyyy"<CR>
"1D","F","I","I","I","6S","56S","I","I","I","I","I","I","I","I","I","yyyy"<CR>
"14H","IA","IB","IC","IN","IG","VA(kV)","VB(kV)","VC(kV)","VN(kV) ","*","VDC",
"FREQ","TRIG ","***Names of elements in the relay word rows 2–57 separated by spaces***","yyyy"<CR>
"256D","I","I","I","I","I","F","F","F","F","I","F","2S","88S","yyyy"<CR>
<ETX>

Model SEL-0300G2 Relay sends:

<STX>
"**CAS**",5,"yyyy"<CR>
"**CST**",1,"yyyy"<CR>
"1H","FID","yyyy"<CR>
"1D","46S","yyyy"<CR>
"7H","MONTH","DAY","YEAR","HOUR","MIN","SEC","MSEC","yyyy"<CR>
"1D","I","I","I","I","I","I","I","yyyy",<CR>
"27H","IA","IB","IC","IN","VA","VB","VC","VN","MOF","*","*","*","VS","+5V_PS",
"+5V_REG","-5V_REG","+12V_PS","-12V_PS","+15V_PS","-15V_PS","TEMP","RAM","RO
M","A/D","CR_RAM","EEPROM","IO_BRD","yyyy"<CR>
"1D","9S","9S","9S","9S","9S","9S","9S","9S","9S","9S","9S","9S","9S","9S","9S","9S",
"9S","9S","9S","9S","9S","9S","yyyy"<CR>
"**CHI**",1,"yyyy"<CR>
"1H","FID","yyyy"<CR>
"1D","46S","yyyy"<CR>
"13H","REC_NUM","MONTH","DAY","YEAR","HOUR","MIN","SEC","MSEC","EVENT",
"CURR","FREQ","GROUP","TARGETS","yyyy"<CR>
"30D","I","I","I","I","I","I","I","I","6S","I","F","I","56S","yyyy"<CR>
"**CEV**",1,"yyyy"<CR>
"1H","FID","yyyy"<CR>
"1D","46S","yyyy"<CR>
"7H","MONTH","DAY","YEAR","HOUR","MIN","SEC","MSEC","yyyy"<CR>
"1D","I","I","I","I","I","I","I","I","yyyy"<CR>
"15H","FREQ","SAM/CYC_A","SAM/CYC_D","NUM_OF_CYC","EVENT","TARGETS",
"IA","IB","IC","IN","IG","3I2","*","*","*","yyyy"<CR>
"1D","F","I","I","I","6S","56S","I","I","I","I","I","I","I","I","I","yyyy"<CR>
"14H","IA","IB","IC","IN","IG","VA(kV)","VB(kV)","VC(kV)","VN(kV)", "VS(kV) ","VDC",
"FREQ","TRIG ","***Names of elements in the relay word rows 2–57 separated by spaces***","yyyy"<CR>
"60D","I","I","I","I","I","F","F","F","F","F","I","F","2S","88S","yyyy"<CR>
"**CEV C**",1,"yyyy"<CR>
"1H","FID","yyyy"<CR>
"1D","46S","yyyy"<CR>
"7H","MONTH","DAY","YEAR","HOUR","MIN","SEC","MSEC","yyyy"<CR>
"1D","I","I","I","I","I","I","I","I","yyyy",<CR>
"15H","FREQ","SAM/CYC_A","SAM/CYC_D","NUM_OF_CYC","EVENT","TARGETS",
"IA","IB","IC","IN","IG","3I2","*","*","*","yyyy"<CR>
"1D","F","I","I","I","6S","56S","I","I","I","I","I","I","I","I","I","yyyy"<CR>
"14H","IA","IB","IC","IN","IG","VA(kV)","VB(kV)","VC(kV)","VN(kV)", "VS(kV) ","VDC",
"FREQ","TRIG ","***Names of elements in the relay word rows 2–57 separated by spaces***","yyyy"<CR>
"240D","I","I","I","I","I","F","F","F","F","F","I","F","2S","88S","yyyy"<CR>
"**CEV R**",1,"yyyy"<CR>
"1H","FID","yyyy"<CR>
"1D","46S","yyyy"<CR>
"7H","MONTH","DAY","YEAR","HOUR","MIN","SEC","MSEC","yyyy"<CR>
"1D","I","I","I","I","I","I","I","I","yyyy",<CR>

"15H","FREQ","SAM/CYC_A","SAM/CYC_D","NUM_OF_CYC","EVENT","TARGETS",
"IA","IB","IC","IN","IG","3I2","*","*","*","yyyy"<CR>
"1D","F","I","I","I","6S","56S","I","I","I","I","I","I","I","I","I","yyyy"<CR>
"14H","IA","IB","IC","IN","IG","VA(kV)","VB(kV)","VC(kV)","VN(kV)", "*","VDC",
"FREQ","TRIG ","***Names of elements in the relay word rows 2–57 separated by spaces***","yyyy"<CR>
"256D","I","I","I","I","I","F","F","F","F","F","I","F","2S","88S","yyyy"<CR>
<ETX>

Model SEL-0300G3 Relay sends:

<STX>
"**CAS**",5,"yyyy"<CR>
"**CST**",1,"yyyy"<CR>
"1H","FID","yyyy"<CR>
"1D","46S","yyyy"<CR>
"7H","MONTH","DAY","YEAR","HOUR","MIN","SEC","MSEC","yyyy"<CR>
"1D","I","I","I","I","I","I","I","yyyy",<CR>
"27H","IA","IB","IC","IN","VA","VB","VC","VN","MOF","IA87","IB87","IC87","VS",
"+5V_PS","+5V_REG","-5V_REG","+12V_PS","-12V_PS","+15V_PS","-15V_PS","TEMP","R
AM","ROM","A/D","CR_RAM","EEPROM","IO_BRD","yyyy"<CR>
"1D","9S","9S","9S","9S","9S","9S","9S","9S","9S","9S","9S","9S","9S","9S","9S","9S","9S",
"9S","9S","9S","9S","9S","9S","9S","9S","9S","9S","yyyy"<CR>
"**CHI**",1,"yyyy"<CR>
"1H","FID","yyyy"<CR>
"1D","46S","yyyy"<CR>
"13H","REC_NUM","MONTH","DAY","YEAR","HOUR","MIN","SEC","MSEC","EVENT",
"CURR","FREQ","GROUP","TARGETS","yyyy"<CR>
"30D","I","I","I","I","I","I","I","I","6S","I","F","I","56S","yyyy"<CR>
"**CEV**",1,"yyyy"<CR>
"1H","FID","yyyy"<CR>
"1D","46S","yyyy"<CR>
"7H","MONTH","DAY","YEAR","HOUR","MIN","SEC","MSEC","yyyy"<CR>
"1D","I","I","I","I","I","I","I","yyyy"<CR>
"15H","FREQ","SAM/CYC_A","SAM/CYC_D","NUM_OF_CYC","EVENT","TARGETS",
"IA","IB","IC","IN","IG","3I2","IA87","IB87","IC87","yyyy"<CR>
"1D","F","I","I","I","6S","56S","I","I","I","I","I","I","I","I","I","yyyy"<CR>
"14H","IA","IB","IC","IN","IG","VA(kV)","VB(kV)","VC(kV)","VN(kV)", "VS(kV) ","VDC",
"FREQ","TRIG ","***Names of elements in the relay word rows 2–57 separated by spaces***","yyyy"<CR>
"60D","I","I","I","I","I","F","F","F","F","F","I","F","2S","88S","yyyy"<CR>
"**CEV C**",1,"yyyy"<CR>
"1H","FID","yyyy"<CR>
"1D","46S","yyyy"<CR>
"7H","MONTH","DAY","YEAR","HOUR","MIN","SEC","MSEC","yyyy"<CR>
"1D","I","I","I","I","I","I","I","yyyy",<CR>
"15H","FREQ","SAM/CYC_A","SAM/CYC_D","NUM_OF_CYC","EVENT","TARGETS",
"IA","IB","IC","IN","IG","3I2","IA87","IB87","IC87","yyyy"<CR>
"1D","F","I","I","I","6S","56S","I","I","I","I","I","I","I","I","I","yyyy"<CR>

"14H","IA","IB","IC","IN","IG","VA(kV)","VB(kV)","VC(kV)","VN(kV)", "VS(kV) ","VDC",
"FREQ","TRIG ","***Names of elements in the relay word rows 2–57 separated by spaces***","yyyy"<CR>
"256D","I","I","I","I","I","F","F","F","F","F","I","F","2S","88S","yyyy"<CR>
"**CEV R**",1,"yyyy"<CR>
"1H","FID","yyyy"<CR>
"1D","46S","yyyy"<CR>
"7H","MONTH","DAY","YEAR","HOUR","MIN","SEC","MSEC","yyyy"<CR>
"1D","I","I","I","I","I","I","I","yyyy",<CR>
"15H","FREQ","SAM/CYC_A","SAM/CYC_D","NUM_OF_CYC","EVENT","TARGETS",
"IA","IB","IC","IN","IG","3I2","IA87","IB87","IC87","yyyy"<CR>
"1D","F","I","I","I","6S","56S","I","I","I","I","I","I","I","I","I","yyyy"<CR>
"14H","IA","IB","IC","IN","IG","VA(kV)","VB(kV)","VC(kV)","VN(kV)", "VS(kV) ","VDC",
"FREQ","TRIG ","***Names of elements in the relay word rows 2–57 separated by spaces"***,"yyyy"<CR>
"256D","I","I","I","I","I","F","F","F","F","I","F","2S","88S","yyyy"<CR>
<ETX>

See the **CEVENT** command for definition of the "Names of elements in the Relay Word Rows ***2–57*** separated by spaces" field.

CSTATUS COMMAND—SEL-300G

Display status data in Compressed ASCII format by sending:

CST <CR>

Model SEL-0300G0 Relay sends:

<STX>"FID","yyyy"<CR>
"***Relay FID string***","yyyy"<CR>
"MONTH","DAY","YEAR","HOUR","MIN","SEC","MSEC","yyyy"<CR>
xxxx,xxxx,xxxx,xxxx,xxxx,xxxx,xxxx,"yyyy"<CR>
"IA","IB","IC","IN","VA","VB","VC","VN","MOF","*","*","*","*","+5V_PS","+5V_REG",
"-5V_REG","+12V_PS","-12V_PS","+15V_PS","-15V_PS","TEMP","RAM","ROM","A/D","C
R_RAM","EEPROM","IO_BRD","yyyy"<CR>
,"xxxx","xxxx","xxxx","xxxx","xxxx","xxxx","xxxx",
"xxxx","xxxx","xxxx","xxxx","xxxx","xxxx","xxxx","xxxx","xxxx","xxxx",
"xxxx","xxxx","xxxx","xxxx","xxxx","xxxx","yyyy"<CR><ETX>

Model SEL-0300G1 Relay sends:

<STX>"FID","yyyy"<CR>
"***Relay FID string***","yyyy"<CR>
"MONTH","DAY","YEAR","HOUR","MIN","SEC","MSEC","yyyy"<CR>
xxxx,xxxx,xxxx,xxxx,xxxx,xxxx,xxxx,"yyyy"<CR>
"IA","IB","IC","IN","VA","VB","VC","VN","MOF","IA87","IB87","IC87","*","+5V_PS",
"+5V_REG","-5V_REG","+12V_PS","-12V_PS","+15V_PS","-15V_PS","TEMP","RAM","RO
M","A/D","CR_RAM","EEPROM","IO_BRD","yyyy"<CR>
,"xxxx","xxxx","xxxx","xxxx","xxxx","xxxx","xxxx",
"xxxx","xxxx","xxxx","xxxx","xxxx","xxxx","xxxx","xxxx","xxxx","xxxx",
"xxxx","xxxx","xxxx","xxxx","xxxx","xxxx","xxxx","xxxx","xxxx","yyyy"<CR><ETX>

Model SEL-0300G2 Relay sends:

<STX>"FID","yyyy"<CR>
"***Relay FID string***","yyyy"<CR>
"MONTH","DAY","YEAR","HOUR","MIN","SEC","MSEC","yyyy"<CR>
xxxx,xxxx,xxxx,xxxx,xxxx,xxxx,xxxx,"yyyy"<CR>
"IA","IB","IC","IN","VA","VB","VC","VN","MOF","*","*","*","VS","+5V_PS",
"+5V_REG","-5V_REG","+12V_PS","-12V_PS","+15V_PS","-15V_PS",
"TEMP","RAM","ROM","A/D","CR_RAM","EEPROM","IO_BRD","yyyy"<CR>
,"xxxx","xxxx","xxxx","xxxx","xxxx","xxxx","xxxx",
"xxxx","xxxx","xxxx","xxxx","xxxx","xxxx","xxxx","xxxx","xxxx","xxxx",
"xxxx","xxxx","xxxx","xxxx","xxxx","xxxx","xxxx","yyyy"<CR><ETX>

Model SEL-0300G3 Relay sends:

<STX>"FID","yyyy"<CR>
"***Relay FID string***","yyyy"<CR>
"MONTH","DAY","YEAR","HOUR","MIN","SEC","MSEC","yyyy"<CR>
xxxx,xxxx,xxxx,xxxx,xxxx,xxxx,xxxx,"yyyy"<CR>
"IA","IB","IC","IN","VA","VB","VC","VN","MOF","IA87","IB87","IC87","VS","+5V_PS",
"+5V_REG","-5V_REG","+12V_PS","-12V_PS","+15V_PS","-15V_PS","TEMP","RAM","RO
M","A/D","CR_RAM","EEPROM","IO_BRD","yyyy"<CR>
,"xxxx","xxxx","xxxx","xxxx","xxxx","xxxx","xxxx",
"xxxx","xxxx","xxxx","xxxx","xxxx","xxxx","xxxx","xxxx","xxxx","xxxx",
"xxxx","xxxx","xxxx","xxxx","xxxx","xxxx","xxxx","xxxx","xxxx","xxxx", "yyyy"<CR><ETX>

where: xxxx are the data values corresponding to the first line labels and
yyyy is the 4-byte hex ASCII representation of the checksum.

CHISTORY COMMAND—SEL-300G

Display history data in Compressed ASCII format by sending:

CHI <CR>

The relay sends:

<STX>"FID","yyyy"<CR>
"***Relay FID string***","yyyy"<CR>
"REC_NUM","MONTH","DAY","YEAR","HOUR","MIN","SEC","MSEC","EVENT",
"CURR","FREQ","GROUP","TARGETS","yyyy"<CR>
xxxx,xxxx,xxxx,xxxx,xxxx,xxxx,xxxx,xxxx,"xxxx",xxxx,xxxx,xxxx,xxxx,
"yyyy"<CR><ETX>

(the second line is then repeated for each record)

where: xxxx are the data values corresponding to the first line labels and
yyyy is the 4-byte hex ASCII representation of the checksum.

If the history buffer is empty, the relay responds:

<STX>"No Data Available","0668"<CR><ETX>

CEVENT COMMAND—SEL-300G

Display event report in Compressed ASCII format by sending:

CEV [*n* Sx sec Ly[-[w]] R C DIF] (parameters in [ ] are optional)

where:

n	event number (1–29) if LER = 15, (1–15) if LER = 30, defaults to 1.
S*x*	*x* samples per cycle (4 or 16); defaults to 4.
sec	Displays sampled values in secondary Amperes and Volts instead of primary Amperes and kV.
L*y*	*y* cycles event report length (1 – LER) for filtered event reports, (1 – LER+1) for raw event reports, defaults to 15 if not specified.
Ly-	displays report from cycle *y* to LER.
L*y-w*	displays report from cycle *y* to cycle *w*.
R	specifies raw (unfiltered) data; defaults to 16 samples per cycle unless. overridden by the Sx parameter. Defaults to 16 cycles in length unless overridden with the Ly parameter.
C	specifies 16 samples per cycle, 15 cycle length, in primary amperes and kV.
DIF	Specifies differential data report (SEL-0300G1 and SEL-0300G3 models).

The relay responds to the **CEV** command with the ***n*th** event report as shown below. Items in ***italics*** will be replaced with the actual relay data.

<STX>"FID","yyyy"<CR>
"***Relay FID string***","yyyy"<CR>
"MONTH","DAY","YEAR","HOUR","MIN","SEC","MSEC","yyyy"<CR>
xxxx,xxxx,xxxx,xxxx,xxxx,xxxx,xxxx,"yyyy"<CR>
"FREQ","SAM/CYC_A","SAM/CYC_D","NUM_OF_CYC","EVENT","TARGETS","IA","IB",
"IC","IN","IG","3I2","*","*","*","yyyy"<CR>
xxxx,xxxx,xxxx,xxxx,"xxxx",xxxx,xxxx,xxxx,xxxx,xxxx,xxxx,xxxx,"yyyy"<CR>
"IA","IB","IC","IN","IG","VA(kV)","VB(kV)","VC(kV)","VN(kV)", "*","VDC","FREQ",
"TRIG","***Names of elements in the relay word separated by spaces*** ","yyyy"<CR>
xxxx,xxxx,xxxx,xxxx,xxxx,xxxx,xxxx,xxxx,xxxx,xxxx,xxxx,z,"***HEX-ASCII Relay Word***",
"yyyy"<CR>
"SETTINGS","yyyy"<CR>
"***Relay group and global settings as displayed with the showset command (surrounded by quotes***)","yyyy"<CR><ETX>

where:	xxxx	are the data values corresponding to the line labels.
	yyyy	is the 4-byte hex ASCII representation of the checksum.
	FREQ	is the power system frequency at the trigger instant.
	SAM/CYC_A	is the number of analog data samples per cycle (4 or 16).
	SAM/CYC_D	is the number of digital data samples per cycle (4 or 16).
	NUM_OF_CYC	is the number of cycles of data in the event report.
	EVENT	is the event type.
	TARGETS	are the front-panel tripping targets.
	IA, IB, IC, IN, IG, 3I2	is the fault current.
	TRIG	refers to the trigger record.
	z	is “>“ for the trigger row, “*” for the fault current row and empty for all others. If the trigger row and fault current row are the same, both characters are included (e.g., “>*”).
	HEX-ASCII Relay Word	is the hex ASCII format of the Relay Word. The first element in the Relay Word is the most significant bit in the first character.

If samples per cycle are specified as 16, the analog data are displayed at 1/16-cycle intervals and digital data at 1/4 cycle intervals. The digital data are displayed as a series of hex ASCII characters. The relay displays digital data only when they are available. When no data are available, the relay sends only the comma delimiter in the digital data field.

SEL-0300G1 and SEL-0300G3 Relay models respond to the **CEV DIF** command with the ***n*th** event report as shown below. Items in ***italics*** will be replaced with the actual relay data.

<STX>"FID","yyyy"<CR>
"***Relay FID string***","yyyy"<CR>
"MONTH","DAY","YEAR","HOUR","MIN","SEC","MSEC","yyyy"<CR>
xxxx,xxxx,xxxx,xxxx,xxxx,xxxx,xxxx,"yyyy"<CR>
"FREQ","SAM/CYC_A","SAM/CYC_D","NUM_OF_CYC","EVENT","TARGETS","IA","IB",
"IC","IN","IG","3I2","yyyy"<CR>
xxxx,xxxx,xxxx,xxxx,"xxxx",xxxx,xxxx,xxxx,xxxx,xxxx,xxxx,xxxx,"yyyy"<CR>
"IA","IB","IC","IA87","IB87","IC87","IOP1","IOP2","IOP3","IRT1","IRT2","IRT3","I1F2",

"I2F2","I3F2","TRIG","***Names of elements in the relay word separated by spaces***",
"yyyy"<CR>
xxxx,xxxx,xxxx,xxxx,xxxx,xxxx,xxxx,xxxx,xxxx,xxxx,xxxx,xxxx,xxxx,xxxx,xxxx,z,
"***HEX-ASCII Relay Word***","yyyy"<CR>
"SETTINGS","yyyy"<CR>
"***Relay group and global settings as displayed with the showset command (surrounded by quotes)***","yyyy"<CR><ETX>

where:	xxxx	are the data values corresponding to the line labels.
	yyyy	is the 4-byte hex ASCII representation of the checksum.
	FREQ	is the power system frequency at the trigger instant.
	SAM/CYC_A	is the number of analog data samples per cycle (4 or 16).
	SAM/CYC_D	is the number of digital data samples per cycle (4 or 16).
	NUM_OF_CYC	is the number of cycles of data in the event report.
	EVENT	is the event type.
	TARGETS	are the front-panel tripping targets.
	IA, IB, IC	are the phase input currents.
	IA87, IB87, IC87	are the differential input currents.
	IOP1, IOP2, IOP3, IRT1, IRT2, IRT3, I1F2, I2F2, I3F2	are the differential quantities.
	TRIG	refers to the trigger record.
	z	is “>“ for the trigger row, “*” for the fault current row and empty for all others. If the trigger row and fault current row are the same, both characters are included (e.g., “>*”).
	HEX-ASCII Relay Word	is the hex ASCII format of the Relay Word. The first element in the Relay Word is the most significant bit in the first character.

If the specified event does not exist, the relay responds:

<STX>"No Data Available","0668"<CR><ETX>

The “Names of elements in the Relay Word separated by spaces” field is shown below for Model SEL-0300G31 Relay:

"24TC 24D1 24D1T 24C2 24C2T 24CR SS1 SS2 27P1 27P2 27PP1 27V1 59P1 59P2 59G1 59G2 32PTC 32P1 32P1T 32P2 32P2T 59V1 59Q 59PP1 40ZTC 40Z1 40Z1T 40Z2 40Z2T SWING SG1 SG2 46QTC 46Q1 46Q1T 46Q2 46Q2T 46Q2R INAD INADT 78R1 78R2 78Z1 OOSTC 51CTC 51C 51CT 51CR 51GTC 51G 51GT 51GR 51NTC 51N 51NT 51NR 51VTC 51V 51VT 51VR PDEM QDEM GDEM NDEM 50P1 50P1T 50P2 50P2T 50G1 50G1T 50G2 50G2T 50N1 50N1T 50N2 50N2T CC CL CLOSE ULCL 64GTC 64G1 64G1T 64G2 64G2T OOS 60LOP CLEN BKMON BCW BCWA BCWB BCWC FAULT DCLO DCHI 81D1 81D2 81D3 81D4 81D5 81D6 3PO 52A 81D1T 81D2T81D3T 81D4T 81D5T 81D6T 27B81 50L ONLINE BND1A BND1T BND2A BND2T BND3A BND3T BNDA TRGTR BND4A BND4T BND5A BND5T BND6A BND6T BNDT TRIP TRIP1 TRIP2 TRIP3 TRIP4 OC1 OC2 OC3 TR1 TR2 TR3 TR4 ULTR1 ULTR2 ULTR3 ULTR4 LB1 LB2 LB3 LB4 LB5 LB6 LB7 LB8 LB9 LB10 LB11 LB12 LB13 LB14 LB15 LB16 RB1 RB2 RB3 RB4 RB5 RB6 RB7 RB8 RB9 RB10 RB11 RB12 RB13 RB14 RB15 RB16 21CTC 21C1P 21C1T 21C2P 21C2T ZLOAD T64G N64G SV1 SV2 SV3 SV4 SV1T SV2T SV3T SV4T SV5 SV6 SV7 SV8 SV5T SV6T SV7T SV8T SV9 SV10 SV11 SV12 SV9T SV10T SV11T SV12T SV13 SV14 SV15 SV16 SV13T SV14T SV15T SV16T DP8DP7 DP6 DP5 DP4 DP3 DP2 DP1 DP16 DP15 DP14 DP13 DP12

DP11 DP10 DP9 ER OOST IN106 IN105 IN104 IN103 IN102 IN101 ALARM OUT107 OUT106 OUT105 OUT104 OUT103 OUT102 OUT101 87B 87BL1 87BL2 87BL3 87R 87R1 87R2 87R3 87U 87U1 87U2 87U3 50H1 50H1T 50H2 50H2T 50Q1 50Q1T 50Q2 50Q2T 50R1 50R1T 50R2 50R2T 59VP 59VS CFA BKRCF BSYNCH 25C 25A1 25A2 59PP2 27PP2 SF VDIF GENVHI GENVLO GENFHI GENFLO * * * * * MPP1P MABC1P 27VS 21PTC 21P1P 21P1T 21P2P 21P2T MPP2P MABC2P * IN208 IN207 IN206 IN205 IN204 IN203 IN202 IN201 * * * * * * * * OUT201 OUT202 OUT203 OUT204 OUT205 OUT206OUT207 OUT208 OUT209 OUT210 OUT211 OUT212 * * * * 50H2A 50H2B 50H2C * * * * * ** * * * * * * SET1 SET2 SET3 SET4 SET5 SET6 SET7 SET8 SET9 SET10 SET11 SET12 SET13 SET14 SET15 SET16 RST1 RST2 RST3 RST4 RST5 RST6 RST7 RST8 RST9 RST10 RST11 RST12 RST13 RST14 RST15 RST16 LT1 LT2 LT3 LT4 LT5 LT6 LT7 LT8 LT9 LT10 LT11 LT12 LT13 LT14 LT15 LT16 OTHTRIP OTHALRM AMBTRIP AMBALRM BRGTRIP BRGALRM WDGTRIP WDGALRM RTDFLT * * * * * * 2600IN RTD4TR RTD4AL RTD3TR RTD3AL RTD2TR RTD2AL RTD1TR RTD1AL RTD8TR RTD8AL RTD7TR RTD7AL RTD6TR RTD6AL RTD5TR RTD5AL RTD12TR RTD12AL RTD11TR RTD11AL RTD10TR RTD10AL RTD9TR RTD9AL * * * * * * * * "

These names are listed in Table 4.6: SEL-300G Relay Word Bits of this manual. Lists for other relay models may be derived using Table 4.6.

A typical HEX-ASCII Relay Word is shown below:

"8400808284818990C00181020101800000F0000201720000000000500014000000000000000000000000000000","1BAD"

Each bit in the ***HEX-ASCII Relay Word*** reflects the status of a Relay Word bit. The order of the labels in the "***Names of elements in the relay word separated by spaces"*** field matches the order of the ***HEX-ASCII Relay Word***. In the example above, the first two bytes in the ***HEX-ASCII Relay Word*** are "84". In binary, this evaluates to 10000100. Mapping the labels to the bits yields:

Labels	24TC	24D1	24D1T	24C2	24C2T	24CR	SS1	SS2
Bits	1	0	0	0	0	1	0	0

In this example, the 24TC and 24CR Relay Word bits are asserted (logical 1); all others are deasserted (logical 0).

APPENDIX F: MODBUS RTU COMMUNICATIONS PROTOCOL

INTRODUCTION

This appendix describes Modbus® RTU communications features supported by the SEL-300G Relay communications port.

Complete specifications for the Modbus protocol are available from the Modicon web site at www.modicon.com.

Enable Modbus protocol using the serial port settings. When Modbus protocol is enabled, the relay switches the port to Modbus protocol and deactivates the ASCII protocol.

Modbus RTU is a binary protocol that permits communication between a single master device and multiple slave devices. The communication is half duplex; only one device transmits at a time. The master transmits a binary command that includes the address of the desired slave device. All of the slave devices receive the message, but only the slave device with the matching address responds.

The SEL-300G Modbus communication allows a Modbus master device to:

Acquire metering, monitoring, and event data from the relay.

Control SEL-300G output contacts and remote bits.

Read the SEL-300G self-test status and learn the present condition of all relay protection elements.

MODBUS RTU COMMUNICATIONS PROTOCOL

Modbus Queries

Modbus RTU master devices initiate all exchanges by sending a query. The query consists of the fields shown in Table F.1.

Table F.1: Modbus Query Fields

Field	Number of Bytes
Slave Device Address	1 byte
Function Code	1 byte
Data Region	0–251 bytes
Cyclical Redundancy Check (CRC)	2 bytes

The SEL-300G SLAVEID setting defines the device address. Set this value to a unique number for each device on the Modbus network. For Modbus communication to operate properly, no two slave devices may have the same address.

Function codes supported by the SEL-300G are described in Table F.2.

The cyclical redundancy check detects errors in the received data. If an error is detected, the relay discards the packet.

Modbus Responses

The slave device sends a response message after it performs the action requested in the query. If the slave cannot execute the command for any reason, it sends an error response. Otherwise, the slave device response is formatted similarly to the query including the slave address, function code, data (if applicable), and a cyclical redundancy check value.

Supported Modbus Function Codes

The SEL-300G supports the Modbus function codes shown in Table F.2.

Table F.2: SEL-300G Relay Modbus Function Codes

Codes	Description
01h	Read Coil Status
02h	Read Input Status
03h	Read Holding Registers
04h	Read Input Registers
05h	Force Single Coil
06h	Preset Single Register
07h	Read Exception Status
08h	Loopback Diagnostic Command
10h	Preset Multiple Registers
64h	Scattered Register Read

Modbus Exception Responses

The SEL-300G sends an exception code under the conditions described in Table F.3.

Table F.3: SEL-300G Relay Modbus Exception Codes

Exception Code	Error Type	Description
01	Illegal Function Code	The received function code is either undefined or unsupported.
02	Illegal Data Address	The received command contains an unsupported address in the data field.
03	Illegal Data Value	The received command contains a value that is out of range.
04	Device Error	The SEL-300G is in the wrong state for the requested function.
06	Busy	The SEL-300G is unable to process the command at this time due to a busy resource.
08	Memory Error	Checksum error on stored data.

In the event that any of the errors listed in Table F.3 occur, the relay assembles a response message that includes the exception code in the data field. The relay sets the most significant bit in the function code field to indicate to the master that the data field contains an error code, instead of the requested data.

Cyclical Redundancy Check

The SEL-300G calculates a 2-byte CRC value using the device address, function code, and data fields. It appends this value to the end of every Modbus response. When the master device receives the response, it recalculates the CRC. If the calculated CRC matches the CRC sent by the SEL-300G, the master device uses the data received. If there is not a match, the check fails and the message is ignored. The devices use a similar process when the master sends queries.

01h Read Coil Status Command

Use function code 01h to read the On/Off status of the selected bits (coils). You may read the status of up to 2000 bits per query. Note that the relay coil addresses start at 0 (e.g., Coil 1 is located at address zero). The coil status is packed one coil per bit of the data field. The Least Significant Bit (LSB) of the first data byte contains the starting coil address in the query. The other coils follow towards the high order end of this byte and from low order to high order in subsequent bytes.

Table F.4: 01h Read Coil Status Commands

Bytes	Field
Requests from the master must have the following format:	
1 byte	Slave Address
1 byte	Function Code (01h)
2 bytes	Address of the First Bit
2 bytes	Number of Bits to Read
2 bytes	CRC-16
A successful response from the slave will have the following format:	
1 byte	Slave Address
1 byte	Function Code (01h)
1 byte	Bytes of data (*n*)
n bytes	Data
2 bytes	CRC-16

To build the response, the relay calculates the number of bytes required to contain the number of bits requested. If the number of bits requested is not evenly divisible by eight, the relay adds one more byte to maintain the balance of bits, padded by zeroes to make an even byte.

The relay responses to errors in the query are shown below:

Error	Error Code Returned	Communication Counter Increments
Invalid bit to read	Illegal Data Address (02h)	Invalid Address
Invalid number of bits to read	Illegal Data Value (03h)	Illegal Register
Format error	Illegal Data Value (03h)	Bad Packet Format

The coil number assignments are defined in Table F.5.

Table F.5: SEL-300G Relay Command Coils (FC01h)

Coil Number	Description	Coil Number	Description
1	OUT101	21	RB1
2	OUT102	22	RB2
3	OUT103	23	RB3
4	OUT104	24	RB4
5	OUT105	25	RB5
6	OUT106	26	RB6
7	OUT107	27	RB7
8	ALARM	28	RB8
9	OUT201	29	RB9
10	OUT202	30	RB10
11	OUT203	31	RB11
12	OUT204	32	RB12
13	OUT205	33	RB13
14	OUT206	34	RB14
15	OUT207	35	RB14
16	OUT208	36	RB16
17	OUT209	37	CC
18	OUT210	38	OC1
19	OUT211	39	OC2
20	OUT212	40	OC3

02h Read Input Status Command

Use function code 02h to read the On/Off status of the selected bits (inputs). You may read the status of up to 2000 bits per query. Note that the input addresses start at 0 (e.g., Input 1 is located at address zero). The input status is packed one input per bit of the data field. The LSB of the first data byte contains the starting input address in the query. The other inputs follow towards the high order end of this byte, and from low order to high order in subsequent bytes.

Table F.6: 02h Read Input Status Command

Bytes	Field
Requests from the master must have the following format:	
1 byte	Slave Address
1 byte	Function Code (02h)
2 bytes	Address of the First Bit
2 bytes	Number of Bits to Read
2 bytes	CRC-16
A successful response from the slave will have the following format:	
1 byte	Slave Address
1 byte	Function Code (02h)
1 byte	Bytes of data (*n*)
n bytes	Data
2 bytes	CRC-16

To build the response, the relay calculates the number of bytes required to contain the number of bits requested. If the number of bits requested is not evenly divisible by eight, the relay adds one more byte to maintain the balance of bits, padded by zeroes to make an even byte.

Input numbers are defined in Table F.7.

Table F.7: SEL-300G Relay Inputs

Description								Input Number
EN	BKR CLOSED	LOP 60	TRIP	21/51V	50	51	N	8–1
24	27/59	32	40	46	64G	81	87	16–9
*	*	IN106	IN105	IN104	IN103	IN102	IN101	24–17
IN208	IN207	IN206	IN205	IN204	IN203	IN202	IN201	32–25
ALARM	OUT107	OUT106	OUT105	OUT104	OUT103	OUT102	OUT101	40–33
OUT201	OUT202	OUT203	OUT204	OUT205	OUT206	OUT207	OUT208	48–41
OUT209	OUT210	OUT211	OUT212	*	*	*	*	56–49
24TC	24D1	24D1T	24C2	24C2T	24CR	SS1	SS2	64–57
27P1	27P2	27PP1	27V1	59P1	59P2	59G1	59G2	72–65
32PTC	32P1	32P1T	32P2	32P2T	59V1	59Q	59PP1	80–73
40ZTC	40Z1	40Z1T	40Z2	40Z2T	SWING	SG1	SG2	88–81
46QTC	46Q1	46Q1T	46Q2	46Q2T	46Q2R	INAD	INADT	96–89
78R1	78R2	78Z1	OOSTC	51CTC	51C	51CT	51CR	104–97
51GTC	51G	51GT	51GR	51NTC	51N	51NT	51NR	112–105
51VTC	51V	51VT	51VR	PDEM	QDEM	GDEM	NDEM	120–113
50P1	50P1T	50P2	50P2T	50G1	50G1T	50G2	50G2T	128–121
50N1	50N1T	50N2	50N2T	CC	CL	CLOSE	ULCL	136–129
64GTC	64G1	64G1T	64G2	64G2T	OOS	60LOP	CLEN	144–137
BKMON	BCW	BCWA	BCWB	BCWC	FAULT	DCLO	DCHI	152–145
81D1	81D2	81D3	81D4	81D5	81D6	3PO	52A	160–153
81D1T	81D2T	81D3T	81D4T	81D5T	81D6T	27B81	50L	168–161
ONLINE	BND1A	BND1T	BND2A	BND2T	BND3A	BND3T	BNDA	176–169
TRGTR	BND4A	BND4T	BND5A	BND5T	BND6A	BND6T	BNDT	184–177
TRIP	TRIP1	TRIP2	TRIP3	TRIP4	OC1	OC2	OC3	192–185
TR1	TR2	TR3	TR4	ULTR1	ULTR2	ULTR3	ULTR4	200–193
LB1	LB2	LB3	LB4	LB5	LB6	LB7	LB8	208–201
LB9	LB10	LB11	LB12	LB13	LB14	LB15	LB16	216–209
RB1	RB2	RB3	RB4	RB5	RB6	RB7	RB8	224–217
RB9	RB10	RB11	RB12	RB13	RB14	RB15	RB16	232–225
21CTC	21C1P	21C1T	21C2P	21C2T	ZLOAD	T64G	N64G	240–233
SV1	SV2	SV3	SV4	SV1T	SV2T	SV3T	SV4T	248–241
SV5	SV6	SV7	SV8	SV5T	SV6T	SV7T	SV8T	256–249
SV9	SV10	SV11	SV12	SV9T	SV10T	SV11T	SV12T	264–257
SV13	SV14	SV15	SV16	SV13T	SV14T	SV15T	SV16T	272–265
DP8	DP7	DP6	DP5	DP4	DP3	DP2	DP1	280–273
DP16	DP15	DP14	DP13	DP12	DP11	DP10	DP9	288–281
ER	OOST	IN106	IN105	IN104	IN103	IN102	IN101	296–289
ALARM	OUT107	OUT106	OUT105	OUT104	OUT103	OUT102	OUT101	304–297
87B	87BL1	87BL2	87BL3	87R	87R1	87R2	87R3	312–305
87U	87U1	87U2	87U3	50H1	50H1T	50H2	50H2T	320–313
50Q1	50Q1T	50Q2	50Q2T	50R1	50R1T	50R2	50R2T	328–321
59VP	59VS	CFA	BKRCF	BSYNCH	25C	25A1	25A2	336–329

Description								Input Number
59PP2	27PP2	SF	VDIF	GENVHI	GENVLO	GENFHI	GENFLO	344–337
87NTC	87N1P	87N1T	87N2P	87N2T	MPP1P	MABC1P	27VS	352–345
21PTC	21P1P	21P1T	21P2P	21P2T	MPP2P	MABC2P	*	360–353
IN208	IN207	IN206	IN205	IN204	IN203	IN202	IN201	368–361
64FTC	64F1	64F1T	64F2	64F2T	64FFLT	*	*	376–369
OUT201	OUT202	OUT203	OUT204	OUT205	OUT206	OUT207	OUT208	384–377
OUT209	OUT210	OUT211	OUT212	*	*	*	*	392–385
50H2A	50H2B	50H2C	*	*	*	*	*	400–393
*	*	*	*	*	*	*	*	408–401
SET1	SET2	SET3	SET4	SET5	SET6	SET7	SET8	416–409
SET9	SET10	SET11	SET12	SET13	SET14	SET15	SET16	424–417
RST1	RST2	RST3	RST4	RST5	RST6	RST7	RST8	432–425
RST9	RST10	RST11	RST12	RST13	RST14	RST15	RST16	440–433
LT1	LT2	LT3	LT4	LT5	LT6	LT7	LT8	448–441
LT9	LT10	LT11	LT12	LT13	LT14	LT15	LT16	456–449
OTHTRIP	OTHALRM	AMBTRIP	AMBALRM	BRGTRIP	BRGALRM	WDGTRIP	WDGALRM	464–457
RTDFLT	*	*	*	*	*	*	2600IN	472–465
RTD4TR	RTD4AL	RTD3TR	RTD3AL	RTD2TR	RTD2AL	RTD1TR	RTD1AL	480–473
RTD8TR	RTD8AL	RTD7TR	RTD7AL	RTD6TR	RTD6AL	RTD5TR	RTD5AL	488–481
RTD12TR	RTD12AL	RTD11TR	RTD11AL	RTD10TR	RTD10AL	RTD9TR	RTD9AL	496–489

In each row, the input numbers are assigned from the right-most input to the left-most input (i.e., Input 1 is “N” and Input 8 is “EN”). Input addresses start at 0000 (i.e., Input 1 is located at Input Address 0000).

The relay responses to errors in the query are shown below:

Error	Error Code Returned	Communication Counter Increments
Invalid bit to read	Illegal Data Address (02h)	Invalid Address
Invalid number of bits to read	Illegal Data Value (03h)	Illegal Register
Format error	Illegal Data Value (03h)	Bad Packet Format

03h Read Holding Register Command

Use function code 03h to read directly from the Modbus Register Map shown in Table F.20. You may read a maximum of 125 registers at once with this function code. Most masters use 4X references with this function code. If you are accustomed to 4X references with this function code, for five-digit addressing, add 40001 to the standard database address.

Table F.8: 03h Read Holding Register Command

Bytes	Field
Requests from the master must have the following format:	
1 byte	Slave Address
1 byte	Function Code (03h)
2 bytes	Starting Register Address
2 bytes	Number of Registers to Read
2 bytes	CRC-16
A successful response from the slave will have the following format:	
1 byte	Slave Address
1 byte	Function Code (03h)
1 byte	Bytes of data (*n*)
n bytes	Data
2 bytes	CRC-16

The relay responses to errors in the query are shown below:

Error	Error Code Returned	Communication Counter Increments
Illegal register to read	Illegal Data Address (02h)	Invalid Address
Illegal number of registers to read	Illegal Data Value (03h)	Illegal Register
Format error	Illegal Data Value (03h)	Bad Packet Format
Busy	Slave is busy with other task (06h)	

04h Read Input Registers Command

Use function code 04h to read from the Modbus Register Map shown in Table F.20. You may read a maximum of 125 registers at once with this function code. Most masters use 3X references with this function code. If you are accustomed to 3X references with this function code, for five-digit addressing, add 30001 to the standard database address.

Table F.9: 04h Read Holding Register Command

Bytes	Field
Requests from the master must have the following format:	
1 byte	Slave Address
1 byte	Function Code (04h)
2 bytes	Starting Register Address
2 bytes	Number of Registers to Read
2 bytes	CRC-16

Bytes	Field
A successful response from the slave will have the following format:	
1 byte	Slave Address
1 byte	Function Code (04h)
1 byte	Bytes of data (*n*)
n bytes	Data
2 bytes	CRC-16

The relay responses to errors in the query are shown below:

Error	Error Code Returned	Communication Counter Increments
Illegal register to read	Illegal Data Address (02h)	Invalid Address
Illegal number of registers to read	Illegal Data Value (03h)	Illegal Register
Format error	Illegal Data Value (03h)	Bad Packet Format
Busy	Slave is busy with other task (06h)	

05h Force Single Coil Command

Use function code 05h to set or clear a coil.

Table F.10: 05h Force Single Coil Command

Bytes	Field
Requests from the master must have the following format:	
1 byte	Slave Address
1 byte	Function Code (05h)
2 bytes	Coil Reference
1 byte	Operation Code (FF for bit set, 00 for bit clear)
1 byte	Placeholder (00)
2 bytes	CRC-16

Note: The command response is identical to the command request.

The coil numbers supported by the SEL-300G are listed in Table F.11. The physical coils (coils 1–20) are self-resetting. Pulsing a set remote bit clears the remote bit.

Table F.11: SEL-300G Relay Command Coils (FC05h)

Coil	Field	Coil	Field
1	PULSE OUT101	29	SET/CLEAR RB9
2	PULSE OUT102	30	SET/CLEAR RB10
3	PULSE OUT103	31	SET/CLEAR RB11
4	PULSE OUT104	32	SET/CLEAR RB12
5	PULSE OUT105	33	SET/CLEAR RB13
6	PULSE OUT106	34	SET/CLEAR RB14
7	PULSE OUT107	35	SET/CLEAR RB15
8	PULSE ALARM	36	SET/CLEAR RB16
9	PULSE OUT201	37	PULSE RB1
10	PULSE OUT202	38	PULSE RB2
11	PULSE OUT203	39	PULSE RB3
12	PULSE OUT204	40	PULSE RB4
13	PULSE OUT205	41	PULSE RB5
14	PULSE OUT206	42	PLUSE RB6
15	PULSE OUT207	43	PULSE RB7
16	PULSE OUT208	44	PULSE RB8
17	PULSE OUT209	45	PULSE RB9
18	PULSE OUT210	46	PULSE RB10
19	PULSE OUT211	47	PULSE RB11
20	PULSE OUT212	48	PULSE RB12
21	SET/CLEAR RB1	49	PULSE RB13
22	SET/CLEAR RB2	50	PULSE RB14
23	SET/CLEAR RB3	51	PULSE RB15
24	SET/CLEAR RB4	52	PULSE RB16
25	SET/CLEAR RB5	53	PULSE CC
26	SET/CLEAR RB6	54	PULSE OC1
27	SET/CLEAR RB7	55	PULSE OC2
28	SET/CLEAR RB8	56	PULSE OC3

Coil addresses start at 0000 (i.e., Coil 1 is located at Coil address 0000). If the relay is disabled or the breaker jumper is not installed, it will respond with error code 4 (Device Error).

In addition to error code 4, the relay responses to errors in the query are shown below:

Error	Error Code Returned	Communication Counter Increments
Invalid bit (coil) number	Illegal Data Address (02h)	Invalid Address
Illegal bit state requested	Illegal Data Value (03h)	Illegal Function Code/Op Code
Format error	Illegal Data Value (03h)	Bad Packet Format

06h Preset Single Register Command

The SEL-300G uses this function to allow a Modbus master to write directly to a database register. Refer to the Modbus Register Map in Table F.20 for a list of registers that can be written using this function code. If you are accustomed to 4X references with this function code, for six-digit addressing, add 400001 to the standard database addresses.

Table F.12: 06h Preset Single Register Command

Bytes	Field
Requests from the master must have the following format:	
1 byte	Slave Address
1 byte	Function Code (06h)
2 bytes	Register Address
2 bytes	Data
2 bytes	CRC-16

Note: The command response is identical to the command request.

The relay responses to errors in the query are shown below:

Error	Error Code Returned	Communication Counter Increments
Illegal register address	Illegal Data Address (02h)	Invalid Address Illegal Write
Illegal register value	Illegal Data Value (03h)	Illegal Write
Format error	Illegal Data Value (03h)	Bad Packet Format

07h Read Exception Status Command

The SEL-300G uses this function to allow a Modbus master to read the present status of the relay and protected circuit.

Table F.13: 07h Read Exception Status Command

Bytes	Field
Requests from the master must have the following format:	
1 byte	Slave Address
1 byte	Function Code (07h)
0 bytes	No Data Fields Are Sent
2 bytes	CRC-16
A successful response from the slave will have the following format:	
1 byte	Slave Address
1 byte	Function Code (07h)
1 byte	Status Byte
2 bytes	CRC-16
The status byte is sent least significant bit first, and consists of the following bits:	
Bit 0	OUT1 Status
Bit 1	OUT2 Status
Bit 2	OUT3 Status
Bit 3	OUT4 Status
Bit 4	Alarm Output status
Bit 5	Input 1 Status
Bit 6	Input 2 Status
Bit 7	Relay Status

If the status bit is set to 1, the following are true for the status indicated by the bit:

Alarm contact is asserted.

Relay is disabled.

If the status bit is set to 0, the following are true for the status indicated by the bit:

Alarm contact is deasserted.

Relay is enabled.

The relay response to errors in the query is shown below:

Error	Error Code Returned	Communication Counter Increments
Format error	Illegal Data Value (03h)	Bad Packet Format

08h Loopback Diagnostic Command

The SEL-300G uses this function to allow a Modbus master to perform a diagnostic test on the Modbus communications channel and relay. When the subfunction field is 0000h, the relay returns a replica of the received message.

Table F.14: 08h Loopback Diagnostic Command

Bytes	Field
Requests from the master must have the following format:	
1 byte	Slave Address
1 byte	Function Code (08h)
2 bytes	Subfunction (0000h)
2 bytes	Data Field
2 bytes	CRC-16
A successful response from the slave will have the following format:	
1 byte	Slave Address
1 byte	Function Code (08h)
2 bytes	Subfunction (0000h)
2 bytes	Data Field (identical to data in Master request)
2 bytes	CRC-16

The relay responses to errors in the query are shown below:

Error	Error Code Returned	Communication Counter Increments
Illegal subfunction code	Illegal Data Value (03h)	Illegal Function Code/Op Code
Format error	Illegal Data Value (03h)	Bad Packet Format

10h Preset Multiple Registers Command

This function code works much like code 06h, except that it allows you to write multiple registers at once, up to 100 per operation. Refer to the Modbus Register Map in Table F.20 for a list of registers that can be written using this function code. If you are accustomed to 4X references with the function code, for six-digit addressing, simply add 400001 to the standard database addresses.

Table F.15: 10h Preset Multiple Registers Command

Bytes	Field
Requests from the master must have the following format:	
1 byte	Slave Address
1 byte	Function Code (10h)
2 bytes	Starting Address
2 bytes	Number of Registers to Write
1 byte	Bytes of Data (*n*)
n bytes	Data
2 bytes	CRC-16

Bytes	Field
A successful response from the slave will have the following format:	
1 byte	Slave Address
1 byte	Function Code (10h)
2 bytes	Starting Address
2 bytes	Number of Registers
2 bytes	CRC-16

The relay responses to errors in the query are shown below:

Error	Error Code Returned	Communication Counter Increments
Illegal register to set	Illegal Data Address (02h)	Invalid Address Illegal Write
Illegal number of registers to set	Illegal Data Value (03h)	Illegal Register Illegal Write
Incorrect number of bytes in query data region	Illegal Data Value (03h)	Bad Packet Format Illegal Write
Invalid register data value	Illegal Data Value (03h)	Illegal Write

64h Scattered Register Read

The SEL-300G uses this function to allow a Modbus master to read noncontiguous registers in a single request. A maximum of 100 registers can be read in a single query.

Table F.16: 64h Scattered Register Read Command

Bytes	Field
Requests from the master must have the following format:	
1 byte	Slave Address
1 byte	Function Code (64h)
1 byte	Query Data Length[a]
1 byte	Subfunction Code (04h)[b]
1 byte	Transmission Number
2 bytes	Address of First Register
2 bytes	Address of Second Register
•	•
•	•
•	•
2 bytes	Address of *n*th Register
2 bytes	CRC-16

Bytes	Field
A successful response from the slave will have the following format:	
1 byte	Slave Address
1 byte	Function Code (64h)
1 byte	Response Data Length
1 byte	Subfunction Code (04h)[b]
1 byte	Transmission Number
2 bytes	Data from First Register
2 bytes	Data from Second Register
•	•
•	•
•	•
2 bytes	Data from *n*th Register
2 bytes	CRC-16

[a]Query data length is always data length +2 because the subfunction code and the transmission number are part of the query data.
[b] Only subfunction 04h is supported.

The relay responses to errors in the query are shown below:

Error	Error Code Returned	Communication Counter Increments
Incorrect/Illegal query data length	Illegal Data Value (03h)	Bad Packet Format
Invalid subfunction code	Illegal Data Value (03h)	Illegal Function Code/Op Code
Illegal register address	Illegal Data Address (02h)	Invalid Address

Controlling Output Contacts and Remote Bits Using Modbus

The SEL-300G Modbus Register Map (Table F.20) includes three fields that allow a Modbus master to force the relay to perform a variety of operations. Use Modbus function codes 06h or 10h to write the appropriate command codes and parameters into the registers shown in Table F.17. If function code 06h is used to write to a command code that has parameters, the parameters must be written before the command code. After issuing a command, parameters 1 and 2 are cleared and must be rewritten prior to the next command.

Table F.17: SEL-300G Relay Modbus Command Region

Address	Field
02A0h	Command Code
02A1h	Parameter 1
02A2h	Parameter 2

Table F.18 defines the command codes, their function and associated parameters, and the Modbus function code used to initiate the related command code.

Table F.18: Modbus Command Codes

Command Code	Function	Parameter Definition		Modbus Function Code
01	Open Breaker 1	No Parameter		06h, 10h
02	Open Breaker 2	No Parameter		06h, 10h
03	Open Breaker 3	No Parameter		06h, 10h
04	Close Breaker 1	No Parameter		06h, 10h
05	Reset Targets	No Parameter		06h, 10h
06	Trigger	No Parameter		06h, 10h
07	Pulse OUT101	1–30 seconds duration (defaults to 1 second)		06h, 10h
08	Pulse OUT102	1–30 seconds duration (defaults to 1 second)		06h, 10h
09	Pulse OUT103	1–30 seconds duration (defaults to 1 second)		06h, 10h
10	Pulse OUT104	1–30 seconds duration (defaults to 1 second)		06h, 10h
11	Pulse OUT105	1–30 seconds duration (defaults to 1 second)		06h, 10h
12	Pulse OUT106	1–30 seconds duration (defaults to 1 second)		06h, 10h
13	Pulse OUT107	1–30 seconds duration (defaults to 1 second)		06h, 10h
14	Pulse Alarm	1–30 seconds duration (defaults to 1 second)		06h, 10h
15	Pulse OUT201	1–30 seconds duration (defaults to 1 second)		06h, 10h
16	Pulse OUT202	1–30 seconds duration (defaults to 1 second)		06h, 10h
17	Pulse OUT203	1–30 seconds duration (defaults to 1 second)		06h, 10h
18	Pulse OUT204	1–30 seconds duration (defaults to 1 second)		06h, 10h
19	Pulse OUT205	1–30 seconds duration (defaults to 1 second)		06h, 10h
20	Pulse OUT206	1–30 seconds duration (defaults to 1 second)		06h, 10h
21	Pulse OUT207	1–30 seconds duration (defaults to 1 second)		06h, 10h
22	Pulse OUT208	1–30 seconds duration (defaults to 1 second)		06h, 10h
23	Pulse OUT209	1–30 seconds duration (defaults to 1 second)		06h, 10h
24	Pulse OUT210	1–30 seconds duration (defaults to 1 second)		06h, 10h
25	Pulse OUT211	1–30 seconds duration (defaults to 1 second)		06h, 10h
26	Pulse OUT212	1–30 seconds duration (defaults to 1 second)		06h, 10h
27	Change Act. Group	1–2		06h, 10h
28	Switch Protocol	0080h		06h, 10h
29	Reset Data Regions	0000 0000 0000 0001	Demand Metering	06h, 10h
		0000 0000 0000 0010	Peak Demand Metering	
		0000 0000 0000 0100	Energy Values	
		0000 0000 0000 1000	Max/Min meter values	
		0000 0000 0001 0000	Breaker Monitor	
		0000 0000 0010 0000	History Buffer (history and events)	
		0000 0000 0100 0000	Targets	
		0000 0000 1000 0000	Sync Check	
		0000 0001 0000 0000	SER	
		0000 0010 0000 0000	Communication Counters	
		0000 0100 0000 0000	Profiles	

Command Code	Function	Parameter Definition	Modbus Function Code
30	Control Remote Bits	See Note	06h, 10h

Note Command Code 30–Control Remote Bits
This code controls the remote bits. This command code has two parameters:

Parameter 1 determines the bit operation.

Value	Operation
1	Set
2	Clear
3	Pulse (1/4 cycle)

Parameter 2 determines which bit to control. It is bitmasked for future expansion, but only one bit can be controlled at a time. The highest numbered bit will be controlled if more than one bit occurs in the parameter.

Bit Pattern	Remote Bit
0000 0000 0000 0001	RB1
0000 0000 0000 0010	RB2
0000 0000 0000 0100	RB3
0000 0000 0000 1000	RB4
0000 0000 0001 0000	RB5
0000 0000 0010 0000	RB6
0000 0000 0100 0000	RB7
0000 0000 1000 0000	RB8

Bit Pattern	Remote Bit
0000 0001 0000 0000	RB9
0000 0010 0000 0000	RB10
0000 0100 0000 0000	RB11
0000 1000 0000 0000	RB12
0001 0000 0000 0000	RB13
0010 0000 0000 0000	RB14
0100 0000 0000 0000	RB15
1000 0000 0000 0000	RB16

Error Codes

In addition to the error codes returned for function codes 06h or 10h, the following error codes are returned for command codes.

If the relay is disabled or if the breaker jumper is not installed while the commands 1–4 and 7–26 are issued, the relay will return error code 04 (device error).

If the relay is disabled while Reset Targets command (05) is issued, the relay will return error code 04h (device error).

If the TRIGGER command (06) cannot be executed due to multiple events in progress, the relay will return error code 06h (device busy). If the relay is disabled while this command is issued, the relay will return 04h (device error).

If the Switch Protocol command (28) or Reset command (29) cannot be executed if the relay is busy, it will return error code 06h (device busy).

Reading Event Data Using Modbus

The Modbus Register Map (Table F.20) provides a feature that allows you to download complete event data via Modbus. The SEL-300G stores the 29 latest event summaries and the 29 latest 15-cycle or the 15 latest 30-cycle full-length event reports. Please refer to ***Section 11: Event Reports and SER Functions*** for a detailed description.

The event report will contain both analog and digital data. To download the event data using Modbus, proceed as follows:

Write the event number you wish to download at address 02D1h.

Write the channel number you wish to download at address 02D2h. Refer to Table F.19 for the channel number assignment.

Read the four-sample per cycle raw event data from the Modbus Map.

Note that reading event data via Modbus is significantly slower compared to the other data in the Modbus Register Map (Table F.20). Typical response time to read a single channel data via Modbus is about 11 seconds when accessing the new event report for the first time. Subsequent channels with the same event report will be less than 100 ms at 9600 baud rate.

Table F.19: Assign Event Report Channel Using Address 02D2

Set 02D2	To Read Data From Channel
1	IA
2	IB
3	IC
4	IN
5	IG
6	VA
7	VB
8	VC
9	VN
10	VS
11	VDC
12	Frequency
13	IA87
14	IB87
15	IC87
16	Event Report Summary
17	Relay Element Status Row 2[a]
18	Relay Element Status Row 3[a]
19	Relay Element Status Row 4[a]
20	Relay Element Status Row 5[a]
21	Relay Element Status Row 6[a]
22	Relay Element Status Row 7[a]
23	Relay Element Status Row 8[a]
24	Relay Element Status Row 9[a]
25	Relay Element Status Row 10[a]
26	Relay Element Status Row 11[a]
27	Relay Element Status Row 12[a]
28	Relay Element Status Row 13[a]
28	Relay Element Status Row 14[a]
30	Relay Element Status Row 15[a]
31	Relay Element Status Row 16[a]
32	Relay Element Status Row 17[a]
33	Relay Element Status Row 18[a]
34	Relay Element Status Row 19[a]
35	Relay Element Status Row 20[a]

Set 02D2	To Read Data From Channel
36	Relay Element Status Row 21[a]
37	Relay Element Status Row 22[a]
38	Relay Element Status Row 23[a]
39	Relay Element Status Row 24[a]
40	Relay Element Status Row 25[a]
41	Relay Element Status Row 26[a]
42	Relay Element Status Row 27[a]
43	Relay Element Status Row 28[a]
44	Relay Element Status Row 29[a]
45	Relay Element Status Row 30[a]
46	Relay Element Status Row 31[a]
47	Relay Element Status Row 32[a]
48	Relay Element Status Row 33[a]
49	Relay Element Status Row 34[a]
50	Relay Element Status Row 35[a]
51	Relay Element Status Row 36[a]
52	Relay Element Status Row 37[a]
53	Relay Element Status Row 38[a]
54	Relay Element Status Row 39[a]
55	Relay Element Status Row 40[a]
56	Relay Element Status Row 41[a]
57	Relay Element Status Row 42[a]
58	Relay Element Status Row 43[a]
59	Relay Element Status Row 44[a]
60	Relay Element Status Row 45[a]
61	Relay Element Status Row 46[a]
62	Relay Element Status Row 47[a]
63	Relay Element Status Row 48[a]
64	Relay Element Status Row 49[a]
65	Relay Element Status Row 50[a]
66	Relay Element Status Row 51[a]
67	Relay Element Status Row 52[a]
68	Relay Element Status Row 53[a]

[a] Please refer to ***Section 4:*** *ERROR! AUTOTEXT ENTRY NOT DEFINED.* ***Control Equation*** to obtain the contents of each relay element status row. Relay Element Status Rows 0 and 1, which represents targets, are displayed at 0260h and 0261h in the Modbus Register Map.

If the user selects an event number for which there is no data available, 8000h will be returned.

Reading History Data Using Modbus

The Modbus Register Map, Table F.20, provides a feature that allows you to download the complete history of the last 29 events via Modbus. The history contains the date and time stamp, type of event that triggered the report, and the targets. Please refer to Note 8 of the Modbus Map for a list of event types.

To download the history data using Modbus, write the event number (1–29) to address 02B1h. Then read the history of the specific event number you requested from the Modbus Register Map, Table F.20.

If the user selects a history number for which there is no data available, 8000h will be returned.

Table F.20: Modbus Register Map

Address (Hex)	Field	Units	Range Low	Range High	Range Step	Scale Factor
Relay ID						
0000–0016	FID	ASCII string (see Note 1)	—	—	—	—
0017–0019	Revision	ASCII string (see Note 1)	—	—	—	—
001A–002D	Relay ID	ASCII string (see Note 1)	—	—	—	—
002E–004B	Terminal ID	ASCII string (see Note 1)	—	—	—	—
004C	Reserved	(See Note 2)	—	—	—	—
004D	Device Tag #	15045	—	—	—	—
004E	Feature Set ID	0	—	—	—	—
004F	Reserved	—		—	—	—
Relay Status						
0050	Channel IA offset value	mV	–5000	5000	1	1
0051	Channel IA status message 0=OK, 1=Warn, 2=fail	—	—	—	—	—
0052	Channel IB offset value	mV	–5000	5000	1	1
0053	Channel IB status message 0=OK, 1=Warn, 2=fail	—	—	—	—	—
0054	Channel IC offset value	mV	–5000	5000	1	1
0055	Channel IC status message 0=OK, 1=Warn, 2=fail	—	—	—	—	—
0056	Channel IN offset value	mV	–5000	5000	1	1
0057	Channel IN status message 0=OK, 1=Warn, 2=fail	—	—	—	—	—
0058	Channel VA offset value	mV	–5000	5000	1	1
0059	Channel VA status message 0=OK, 1=Warn, 2=fail	—	—	—	—	—
005A	Channel VB offset value	mV	–5000	5000	1	1
005B	Channel VB status message 0=OK, 1=Warn, 2=fail	—	—	—	—	—
005C	Channel VC offset value	mV	–5000	5000	1	1
005D	Channel VC status message 0=OK, 1=Warn, 2=fail	—	—	—	—	—
005E	Channel VN offset value	mV	–5000	5000	1	1
005F	Channel VN status message 0=OK, 1=Warn, 2=fail	—	—	—	—	—
0060	Channel IA87 offset value	mV	–5000	5000	1	1

Address (Hex)	Field	Units	Range Low	Range High	Range Step	Scale Factor
0061	Channel IA87 status message 0=OK, 1=Warn, 2=fail	—	—	—	—	—
0062	Channel IB87 offset value	mV	–5000	5000	1	1
0063	Channel IB87 status message 0=OK, 1=Warn, 2=fail	—	—	—	—	—
0064	Channel IC87 offset value	mV	–5000	5000	1	1
0065	Channel IC87 status message 0=OK, 1=Warn, 2=fail	—	—	—	—	—
0066	Channel VS offset value	mV	–5000	5000	1	1
0067	Channel VS status message 0=OK, 1=Warn, 2=fail	—	—	—	—	—
0068	Master DC offset (MOF) in A/D circuit	mV	–5000	5000	1	1
0069	MOF status message 0=OK, 1=Warn, 2=fail	—	—	—	—	—
006A	+5V Power supply voltage value	V	0	600	1	0.01
006B	+5V Power Supply Status message 0=OK, 1=Warn, 2=fail	—	—	—	—	—
006C	+5_REG power supply value	V	0	600	1	0.01
006D	+5_REG power supply status message 0=OK, 1=Warn, 2=fail	—	—	—	—	—
006E	–5_REG power supply value	V	–600	0	1	0.01
006F	–5_REG power supply status message 0=OK, 1=Warn, 2=fail	—	—	—	—	—
0070	(+12_ps) Power Supply Value	V	0	1500	1	0.01
0071	(+12_ps) Power Supply Status 0=OK, 1=Warn, 2=fail	—	—	—	—	—
0072	(–12_ps)Power Supply Value	V	–1500	0	1	0.01
0073	(–12_ps) Power Supply Status 0=OK, 1=Warn, 2=fail	—	—	—	—	—
0074	(+15_ps) Power Supply Value	V	0	2000	1	0.01
0075	(+15_ps) Power Supply Status0=OK, 1=Warn, 2=fail	—	—	—	—	—
0076	(–15_ps) Power Supply Value	V	–2000	0	1	0.01
0077	(–15_ps) Power Supply Status 0=OK, 1=Warn, 2=fail	—	—	—	—	—
0078	TEMP in degrees Celsius	°C	–1000	1000	1	0.1
0079	Temperature status 0=OK, 1=Warn, 2=fail	—	—	—	—	—
007A	RAM status 0=OK, 2=fail	—	—	—	—	—
007B	ROM status 0=OK, 2=fail	—	—	—	—	—
007C	A/D 0=OK, 1=Warn, 2=fail	—	—	—	—	—

Address (Hex)	Field	Units	Range Low	Range High	Range Step	Scale Factor
007D	CR_RAM status 0=OK, 2=fail	—	—	—	—	—
007E	EEPROM status 0=OK, 2=fail	—	—	—	—	—
007F	IO Board 0=OK, 2=fail	—	—	—	—	—
0080	RELAY STATUS 0=Enabled, 2= Disabled	—	—	—	—	—
0081–008F	Reserved	—	—	—	—	—
Instantaneous Metering						
0090	Phase A Current	Amps	0	65535	1	1
0091	Phase A Current Angle	degrees	–18000	18000	1	0.01
0092	Phase B Current	Amps	0	65535	1	1
0093	Phase B Current Angle	degrees	–18000	18000	1	0.01
0094	Phase C Current	Amps	0	65535	1	1
0095	Phase C Current Angle	degrees	–18000	18000	1	0.01
0096	Neutral Current	Amps	0	65535	1	1
0097	Neutral Current Angle	degrees	–18000	18000	1	0.01
0098	Residual Current	Amps	0	65535	1	1
0099	Residual Current Angle	degrees	–18000	18000	1	0.01
009A	Phase A Voltage	kV	0	65535	1	0.1
009B	Phase A Voltage Angle	degrees	–18000	18000	1	0.01
009C	Phase B Voltage	kV	0	65535	1	0.1
009D	Phase B Voltage Angle	degrees	–18000	18000	1	0.01
009E	Phase C Voltage	kV	0	65535	1	0.1
009F	Phase C Voltage Angle	degrees	–18000	18000	1	0.01
00A0	Neutral Voltage	sV	0	65535	1	0.01
00A1	Neutral Voltage Angle	degrees	–18000	18000	1	0.01
00A2	Sync Voltage	kV	0	65535	1	0.1
00A3	Sync Voltage Angle	degrees	–18000	18000	1	0.01
00A4	Third Harmonic Terminal Voltage	sV	0	65535	1	0.01
00A5	Third Harmonic Neutral Voltage	sV	0	65535	1	0.01
00A6	Megawatts Phase A (DELTA_Y=Y)**	MWatts	–32767	32767	1	0.1
00A7	Megavars Phase A (DELTA_Y=Y)**	MVars	–32767	32767	1	0.1
00A8	Power Factor Phase A (DELTA_Y=Y)**	—	0	100	1	0.01
00A9	LEAD/LAG Phase A (DELTA_Y=Y)** 0 = LAG, 1 = LEAD	—	—	—	—	—

Address (Hex)	Field	Units	Range Low	Range High	Range Step	Scale Factor
00AA	Megawatts Phase B (DELTA_Y=Y)**	MWatts	–32767	32767	1	0.1
00AB	Megavars Phase B (DELTA_Y=Y)**	MVars	–32767	32767	1	0.1
00AC	Power Factor Phase B (DELTA_Y=Y)**		0	100	1	0.01
00AD	LEAD/LAG Phase B (DELTA_Y=Y)** 0 = LAG, 1 = LEAD	—	—	—	—	—
00AE	Megawatts Phase C (DELTA_Y=Y)**	MWatts	–32767	32767	1	0.1
00AF	Megavars Phase C (DELTA_Y=Y)**	MVars	–32767	32767	1	0.1
00B0	Power Factor Phase C (DELTA_Y=Y)**	—	0	100	1	0.01
00B1	LEAD/LAG Phase C (DELTA_Y=Y)** 0 = LAG, 1 = LEAD	—	—	—	—	—
00B2	Megawatts 3 Phase	MWatts	–32767	32767	1	0.1
00B3	Megavars 3 Phase	MVars	–32767	32767	1	0.1
00B4	Power Factor 3 Phase	—	0	100	1	0.01
00B5	LEAD/LAG 3 Phase 0 = LAG 1 = LEAD	—	—	—	—	—
00B6	Positive Sequence Current (I1)	Amps	0	65535	1	1
00B7	Positive Sequence Current Angle	degrees	–18000	18000	1	0.01
00B8	Negative Sequence Current (3I2)	Amps	0	65535	1	1
00B9	Negative Sequence Current Angle	degrees	–18000	18000	1	0.01
00BA	Zero Sequence Current (3I0)	Amps	0	65535	1	1
00BB	Zero Sequence Current Angle	degrees	–18000	18000	1	0.01
00BC	Positive Sequence Voltage (V1)	kV	0	65535	1	0.1
00BD	Positive Sequence Voltage Angle	degrees	–18000	18000	1	0.01
00BE	Negative Sequence Voltage (V2)	kV	0	65535	1	0.1
00BF	Negative Sequence Voltage Angle	degrees	–18000	18000	1	0.01
00C0	Zero Sequence Voltage (3V0)	kV	0	65535	1	0.1
00C1	Zero Sequence Voltage Angle	degrees	–18000	18000	1	0.01
00C2	Phase IA87 Current	Amps	0	65535	1	1
00C3	Phase IA87 Current Angle	degrees	–18000	18000	1	0.01
00C4	Phase IB87 Current	Amps	0	65535	1	1
00C5	Phase IB87 Current Angle	degrees	–18000	18000	1	0.01
00C6	Phase IC87 Current	Amps	0	65535	1	1

Address (Hex)	Field	Units	Range Low	Range High	Range Step	Scale Factor
00C7	Phase IC87 Current Angle	degrees	–18000	18000	1	0.01
00C8	Frequency	Hertz	0	65535	1	0.01
00C9	DC Voltage	V	0	65535	1	0.1
00CA	Volts/Hertz	%		65535		0.01
Differential Currents						
00CB	Operate current for winding 1	Amps	0	65535	1	0.01
00CC	Restraint current for winding 1	Amps	0	65535	1	0.01
00CD	Percent of restraint for winding 1	—	0	65535	1	0.1
00CE	Operate current for winding 2	Amps	0	65535	1	0.01
00CF	Restraint current for winding 2	Amps	0	65535	1	0.01
00D0	Percent of restraint for winding 2	—	0	65535	1	0.1
00D1	Operate current for winding 3	Amps	0	65535	1	0.01
00D2	Restraint current for winding 3	Amps	0	65535	1	0.01
00D3	Percent of restraint for winding 3	—	0	65535	1	0.1
00D4	Second harmonic current in winding 1	Amps	0	65535	1	0.01
00D5	Percent of operate quantity for winding 1	—	0	65535	1	0.1
00D6	Second harmonic current in winding 2	Amps	0	65535	1	0.01
00D7	Percent of operate quantity for winding 2	—	0	65535	1	0.1
00D8	Second harmonic current in winding 3	Amps	0	65535	1	0.01
00D9	Percent of operate quantity for winding 3	—	0	65535	1	0.1
Demand						
00DA	Demand Current Phase A	Amps	0	65535	1	1
00DB	Demand Current Phase B	Amps	0	65535	1	1
00DC	Demand Current Phase C	Amps	0	65535	1	1
00DD	Demand Neutral Current IN	Amps	0	65535	1	1
00DE	Demand Residual Current IG	Amps	0	65535	1	1
00DF	Demand Negative Sequence Current 3I2	Amps	0	65535	1	1
Demand In						
00E0	Megawatts Phase A (DELTA_Y=Y)**	MWatts	–32767	32767	1	0.1
00E1	Megawatts Phase B (DELTA_Y=Y)**	MWatts	–32767	32767	1	0.1
00E2	Megawatts Phase C (DELTA_Y=Y)**	MWatts	–32767	32767	1	0.1

Address (Hex)	Field	Units	Range Low	Range High	Range Step	Scale Factor
00E3	Megawatts 3 Phase	MWatts	–32767	32767	1	0.1
00E4	Megavars Phase A (DELTA_Y=Y)**	MVars	–32767	32767	1	0.1
00E5	Megavars Phase B (DELTA_Y=Y)**	MVars	–32767	32767	1	0.1
00E6	Megavars Phase C (DELTA_Y=Y)**	MVars	–32767	32767	1	0.1
00E7	Megavars 3 Phase	MVars	–32767	32767	1	0.1
Demand Out						
00E8	Megawatts Phase A (DELTA_Y=Y)**	MWatts	–32767	32767	1	0.1
00E9	Megawatts Phase B (DELTA_Y=Y)**	MWatts	–32767	32767	1	0.1
00EA	Megawatts Phase C (DELTA_Y=Y)**	MWatts	–32767	32767	1	0.1
00EB	Megawatts 3 Phase	MWatts	–32767	32767	1	0.1
00EC	Megavars Phase A (DELTA_Y=Y)**	MVars	–32767	32767	1	0.1
00ED	Megavars Phase B (DELTA_Y=Y)**	MVars	–32767	32767	1	0.1
00EE	Megavars Phase C (DELTA_Y=Y)**	MVars	–32767	32767	1	0.1
00EF	Megavars 3 Phase	MVars	–32767	32767	1	0.1
Reset						
00F0	Last Demand Reset Time	ms	0	999	1	1
00F1		sec	0	59	1	1
00F2		minute	0	59	1	1
00F3		hour	1	23	1	1
00F4	Last Demand Reset Date	day	1	31	1	1
00F5		month	1	12	1	1
00F6		year	1992	2999	1	1
Peak Demand						
00F7	Peak Demand Current Phase A	Amps	0	65535	1	1
00F8	Peak Demand Current Phase B	Amps	0	65535	1	1
00F9	Peak Demand Current Phase C	Amps	0	65535	1	1
00FA	Peak Demand Neutral Current IN	Amps	0	65535	1	1
00FB	Peak Demand Residual Current IG	Amps	0	65535	1	1
00FC	Peak Demand Neg Seq Current 3I2	Amps	0	65535	1	1
Peak Demand In						
00FD	Megawatts Phase A (DELTA_Y=Y)**	MWatts	–32767	32767	1	0.1

Address (Hex)	Field	Units	Range Low	Range High	Range Step	Scale Factor
00FE	Megawatts Phase B (DELTA_Y=Y)**	MWatts	–32767	32767	1	0.1
00FF	Megawatts Phase C (DELTA_Y=Y)**	MWatts	–32767	32767	1	0.1
0100	Megawatts 3 Phase	MWatts	–32767	32767	1	0.1
0101	Megavars Phase A (DELTA_Y=Y)**	MVars	–32767	32767	1	0.1
0102	Megavars Phase B (DELTA_Y=Y)**	MVars	–32767	32767	1	0.1
0103	Megavars Phase C (DELTA_Y=Y)**	MVars	–32767	32767	1	0.1
0104	Megavars 3 Phase	MVars	–32767	32767	1	0.1
Peak Demand Out						
0105	Megawatts Phase A (DELTA_Y=Y)**	MWatts	–32767	32767	1	0.1
0106	Megawatts Phase B (DELTA_Y=Y)**	MWatts	–32767	32767	1	0.1
0107	Megawatts Phase C (DELTA_Y=Y)**	MWatts	–32767	32767	1	0.1
0108	Megawatts 3 Phase	MWatts	–32767	32767	1	0.1
0109	Megavars Phase A (DELTA_Y=Y)**	MVars	–32767	32767	1	0.1
010A	Megavars Phase B (DELTA_Y=Y)**	MVars	–32767	32767	1	0.1
010B	Megavars Phase C (DELTA_Y=Y)**	MVars	–32767	32767	1	0.1
010C	Megavars 3 Phase	MVars	–32767	32767	1	0.1
Reset						
010D	Last Peak Demand Reset Time	ms	0	999	1	1
010E		sec	0	59	1	1
010F		minute	0	59	1	1
0110		hour	1	23	1	1
0111	Last Peak Demand Reset Date	day	1	31	1	1
0112		month	1	12	1	1
0113		year	1992	2999	1	1
Energy In						
0114	Megawatts Phase A (DELTA_Y=Y)**	MWattH	0	65535	1	1
0115	Megawatts Phase B (DELTA_Y=Y)**	MWattH	0	65535	1	1
0116	Megawatts Phase C (DELTA_Y=Y)**	MWattH	0	65535	1	1
0117	Megawatts 3 Phase	MWattH	0	65535	1	1
0118	Megavars Phase A (DELTA_Y=Y)**	MVarH	0	65535	1	1

Address (Hex)	Field	Units	Range Low	Range High	Range Step	Scale Factor
0119	Megavars Phase B (DELTA_Y=Y)**	MVarH	0	65535	1	1
011A	Megavars Phase C (DELTA_Y=Y)**	MVarH	0	65535	1	1
011B	Megavars 3 Phase	MVarH	0	65535	1	1
Energy Out						
011C	Megawatts Phase A (DELTA_Y=Y)**	MWattH	0	65535	1	1
011D	Megawatts Phase B (DELTA_Y=Y)**	MWattH	0	65535	1	1
011E	Megawatts Phase C (DELTA_Y=Y)**	MWattH	0	65535	1	1
011F	Megawatts 3 Phase	MWattH	0	65535	1	1
0120	Megavars Phase A (DELTA_Y=Y)**	MVarH	0	65535	1	1
0121	Megavars Phase B (DELTA_Y=Y)**	MVarH	0	65535	1	1
0122	Megavars Phase C (DELTA_Y=Y)**	MVarH	0	65535	1	1
0123	Megavars 3 Phase	MVarH	0	65535	1	1
Reset						
0124	Last Energy Reset Time	ms	0	999	1	1
0125		sec	0	59	1	1
0126		minute	0	59	1	1
0127		hour	1	23	1	1
0128	Last Energy Reset Date	day	1	31	1	1
0129		month	1	12	1	1
012A		year	1992	2999	1	1
Min/Max Metering (See Note 3)						
012B	Max Phase A Current	Amps	0	65535	1	1
012C	Max Phase A Current Time	ms	0	999	1	1
012D		sec	0	59	1	1
012E		minute	0	59	1	1
012F		hour	1	23	1	1
0130	Max Phase A Current Date	day	1	31	1	1
0131		month	1	12	1	1
0132		year	1992	2999	1	1
0133	Min Phase A Current	Amps	0	65535	1	1
0134	Min Phase A Current Time	ms	0	999	1	1
0135		sec	0	59	1	1
0136		minute	0	59	1	1
0137		hour	1	23	1	1
0138	Min Phase A Current Date	day	1	31	1	1

Address (Hex)	Field	Units	Range			Scale Factor
			Low	High	Step	
0139		month	1	12	1	1
013A		year	1992	2999	1	1
013B	Max Phase B Current	Amps	0	65535	1	1
013C	Max Phase B Current Time	ms	0	999	1	1
013D		sec	0	59	1	1
013E		minute	0	59	1	1
013F		hour	1	23	1	1
0140	Max Phase B Current Date	day	1	31	1	1
0141		month	1	12	1	1
0142		year	1992	2999	1	1
0143	Min Phase B Current	Amps	0	65535	1	1
0144	Min Phase B Current Time	ms	0	999	1	1
0145		sec	0	59	1	1
0146		minute	0	59	1	1
0147		hour	1	23	1	1
0148	Min Phase B Current Date	day	1	31	1	1
0149		month	1	12	1	1
014A		year	1992	2999	1	1
014B	Max Phase C Current	Amps	0	65535	1	1
014C	Max Phase C Current Time	ms	0	999	1	1
014D		sec	0	59	1	1
014E		minute	0	59	1	1
014F		hour	1	23	1	1
0150	Max Phase C Current Date	day	1	31	1	1
0151		month	1	12	1	1
0152		year	1992	2999	1	1
0153	Min Phase C Current	Amps	0	65535	1	1
0154	Min Phase C Current Time	ms	0	999	1	1
0155		sec	0	59	1	1
0156		minute	0	59	1	1
0157		hour	1	23	1	1
0158	Min Phase C Current Date	day	1	31	1	1
0159		month	1	12	1	1
015A		year	1992	2999	1	1
015B	Max Neutral Current	Amps	0	65535	1	1
015C	Max Neutral Current Time	ms	0	999	1	1
015D		sec	0	59	1	1
015E		minute	0	59	1	1
015F		hour	1	23	1	1

Address (Hex)	Field	Units	Range			Scale Factor
			Low	High	Step	
0160	Max Neutral Current Date	day	1	31	1	1
0161		month	1	12	1	1
0162		year	1992	2999	1	1
0163	Min Neutral Current	Amps	0	65535	1	1
0164	Min Neutral Current Time	ms	0	999	1	1
0165		sec	0	59	1	1
0166		minute	0	59	1	1
0167		hour	1	23	1	1
0168	Min Neutral Current Date	day	1	31	1	1
0169		month	1	12	1	1
016A		year	1992	2999	1	1
016B	Max Residual Current	Amps	0	65535	1	1
016C	Max Residual Current Time	ms	0	999	1	1
016D		sec	0	59	1	1
016E		minute	0	59	1	1
016F		hour	1	23	1	1
0170	Max Residual Current Date	day	1	31	1	1
0171		month	1	12	1	1
0172		year	1992	2999	1	1
0173	Min Residual Current	Amps	0	65535	1	1
0174	Min Residual Current Time	ms	0	999	1	1
0175		sec	0	59	1	1
0176		minute	0	59	1	1
0177		hour	1	23	1	1
0178	Min Residual Current Date	day	1	31	1	1
0179		month	1	12	1	1
017A		year	1992	2999	1	1
017B	Max Phase A Voltage	kV	0	65535	1	0.1
017C	Max Phase A Voltage Time	ms	0	999	1	1
017D		sec	0	59	1	1
017E		minute	0	59	1	1
017F		hour	1	23	1	1
0180	Max Phase A Voltage Date	day	1	31	1	1
0181		month	1	12	1	1
0182		year	1992	2999	1	1
0183	Min Phase A Voltage	kV	0	65535	1	0.1
0184	Min Phase A Voltage Time	ms	0	999	1	1
0185		sec	0	59	1	1
0186		minute	0	59	1	1
0187		hour	1	23	1	1
0188	Min Phase A Voltage Date	day	1	31	1	1

Address (Hex)	Field	Units	Range			Scale Factor
			Low	High	Step	
0189		month	1	12	1	1
018A		year	1992	2999	1	1
018B	Max Phase B Voltage	kV	0	65535	1	0.1
018C	Max Phase B Voltage Time	ms	0	999	1	1
018D		sec	0	59	1	1
018E		minute	0	59	1	1
018F		hour	1	23	1	1
0190	Max Phase B Voltage Date	day	1	31	1	1
0191		month	1	12	1	1
0192		year	1992	2999	1	1
0193	Min Phase B Voltage	kV	0	65535	1	0.1
0194	Min Phase B Voltage Time	ms	0	999	1	1
0195		sec	0	59	1	1
0196		minute	0	59	1	1
0197		hour	1	23	1	1
0198	Min Phase B Voltage Date	day	1	31	1	1
0199		month	1	12	1	1
019A		year	1992	2999	1	1
019B	Max Phase C Voltage	kV	0	65535	1	0.1
019C	Max Phase C Voltage Time	ms	0	999	1	1
019D		sec	0	59	1	1
019E		minute	0	59	1	1
019F		hour	1	23	1	1
01A0	Max Phase C Voltage Date	day	1	31	1	1
01A1		month	1	12	1	1
01A2		year	1992	2999	1	1
01A3	Min Phase C Voltage	kV	0	65535	1	0.1
01A4	Min Phase C Voltage Time	ms	0	999	1	1
01A5		sec	0	59	1	1
01A6		minute	0	59	1	1
01A7		hour	1	23	1	1
01A8	Min Phase C Voltage Date	day	1	31	1	1
01A9		month	1	12	1	1
01AA		year	1992	2999	1	1
01AB	Max Sync Voltage	kV	0	65535	1	0.1
01AC	Max Sync Voltage Time	ms	0	999	1	1
01AD		sec	0	59	1	1
01AE		minute	0	59	1	1
01AF		hour	1	23	1	1
01B0	Max Sync Voltage Date	day	1	31	1	1
01B1		month	1	12	1	1

Address (Hex)	Field	Units	Range			Scale Factor
			Low	High	Step	
01B2		year	1992	2999	1	1
01B3	Min Sync Voltage	kV	0	65535	1	0.1
01B4	Min Sync Voltage Time	ms	0	999	1	1
01B5		sec	0	59	1	1
01B6		minute	0	59	1	1
01B7		hour	1	23	1	1
01B8	Min Sync Voltage Date	day	1	31	1	1
01B9		month	1	12	1	1
01BA		year	1992	2999	1	1
01BB	Max Neutral Voltage	sV	0	65535	1	0.01
01BC	Max Neutral Voltage Time	ms	0	999	1	1
01BD		sec	0	59	1	1
01BE		minute	0	59	1	1
01BF		hour	1	23	1	1
01C0	Max Neutral Voltage Date	day	1	31	1	1
01C1		month	1	12	1	1
01C2		year	1992	2999	1	1
01C3	Min Neutral Voltage	sV	0	65535	1	0.01
01C4	Min Neutral Voltage Time	ms	0	999	1	1
01C5		sec	0	59	1	1
01C6		minute	0	59	1	1
01C7		hour	1	23	1	1
01C8	Min Neutral Voltage Date	day	1	31	1	1
01C9		month	1	12	1	1
01CA		year	1992	2999	1	1
01CB	Max Terminal 3rd Harmonic Voltage	sV	0	65535	1	0.01
01CC	Max Terminal 3rd Harmonic Voltage Time	ms	0	999	1	1
01CD		sec	0	59	1	1
01CE		minute	0	59	1	1
01CF		hour	1	23	1	1
01D0	Max Terminal 3rd Harmonic Voltage Date	day	1	31	1	1
01D1		month	1	12	1	1
01D2		year	1992	2999	1	1
01D3	Min Terminal 3rd Harmonic Voltage	sV	0	65535	1	0.01
01D4	Min Terminal 3rd Harmonic Voltage Time	ms	0	999	1	1
01D5		sec	0	59	1	1
01D6		minute	0	59	1	1

Address (Hex)	Field	Units	Range			Scale Factor
			Low	High	Step	
01D7		hour	1	23	1	1
01D8	Min Terminal 3rd Harmonic Voltage Date	day	1	31	1	1
01D9		month	1	12	1	1
01DA		year	1992	2999	1	1
01DB	Max Neutral 3rd Harmonic Voltage	sV	0	65535	1	0.01
01DC	Max Neutral 3rd Harmonic Voltage Time	ms	0	999	1	1
01DD		sec	0	59	1	1
01DE		minute	0	59	1	1
01DF		hour	1	23	1	1
01E0	Max Neutral 3rd Harmonic Voltage Date	day	1	31	1	1
01E1		month	1	12	1	1
01E2		year	1992	2999	1	1
01E3	Min Neutral 3rd Harmonic Voltage	sV	0	65535	1	0.01
01E4	Min Neutral 3rd Harmonic Voltage Time	ms	0	999	1	1
01E5		sec	0	59	1	1
01E6		minute	0	59	1	1
01E7		hour	1	23	1	1
01E8	Min Neutral 3rd Harmonic Voltage Date	day	1	31	1	1
01E9		month	1	12	1	1
01EA		year	1992	2999	1	1
01EB	Max Phase A 87 Current	Amps	0	65535	1	1
01EC	Max Phase A 87 Current Time	ms	0	999	1	1
01ED		sec	0	59	1	1
01EE		minute	0	59	1	1
01EF		hour	1	23	1	1
01F0	Max Phase A 87 Current Date	day	1	31	1	1
01F1		month	1	12	1	1
01F2		year	1992	2999	1	1
01F3	Min Phase A 87 Current	Amps	0	65535	1	1
01F4	Min Phase A 87 Current Time	ms	0	999	1	1
01F5		sec	0	59	1	1
01F6		minute	0	59	1	1
01F7		hour	1	23	1	1
01F8	Min Phase A 87 Current Date	day	1	31	1	1
01F9		month	1	12	1	1

Address (Hex)	Field	Units	Range			Scale Factor
			Low	High	Step	
01FA		year	1992	2999	1	1
01FB	Max Phase B 87 Current	Amps	0	65535	1	1
01FC	Max Phase B 87 Current Time	ms	0	999	1	1
01FD		sec	0	59	1	1
01FE		minute	0	59	1	1
01FF		hour	1	23	1	1
0200	Max Phase B 87 Current Date	day	1	31	1	1
0201		month	1	12	1	1
0202		year	1992	2999	1	1
0203	Min Phase B 87 Current	Amps	0	65535	1	1
0204	Min Phase B 87 Current Time	ms	0	999	1	1
0205		sec	0	59	1	1
0206		minute	0	59	1	1
0207		hour	1	23	1	1
0208	Min Phase B 87 Current Date	day	1	31	1	1
0209		month	1	12	1	1
020A		year	1992	2999	1	1
020B	Max Phase C 87 Current	Amps	0	65535	1	1
020C	Max Phase C 87 Current Time	ms	0	999	1	1
020D		sec	0	59	1	1
020E		minute	0	59	1	1
020F		hour	1	23	1	1
0210	Max Phase C 87 Current Date	day	1	31	1	1
0211		month	1	12	1	1
0212		year	1992	2999	1	1
0213	Min Phase C 87 Current	Amps	0	65535	1	1
0214	Min Phase C 87 Current Time	ms	0	999	1	1
0215		sec	0	59	1	1
0216		minute	0	59	1	1
0217		hour	1	23	1	1
0218	Min Phase C 87 Current Date	day	1	31	1	1
0219		month	1	12	1	1
021A		year	1992	2999	1	1
021B	Max 3 Phase Mega Watts	MWatts	–32767	32767	1	0.1
021C	Max 3 Phase Mega Watts Time	ms	0	999	1	1
021D		sec	0	59	1	1
021E		minute	0	59	1	1
021F		hour	1	23	1	1
0220	Max 3 Phase Mega Watts Date	day	1	31	1	1
0221		month	1	12	1	1
0222		year	1992	2999	1	1

Address (Hex)	Field	Units	Range Low	Range High	Range Step	Scale Factor
0223	Min 3 Phase Mega Watts	MWatts	–32767	32767	1	0.1
0224	Min 3 Phase Mega Watts Time	ms	0	999	1	1
0225		sec	0	59	1	1
0226		minute	0	59	1	1
0227		hour	1	23	1	1
0228	Min 3 Phase Mega Watts Date	day	1	31	1	1
0229		month	1	12	1	1
022A		year	1992	2999	1	1
022B	Max 3 Phase Mega Vars	MVars	–32767	32767	1	0.1
022C	Max 3 Phase Mega Vars Time	ms	0	999	1	1
022D		sec	0	59	1	1
022E		minute	0	59	1	1
022F		hour	1	23	1	1
0230	Max 3 Phase Mega Vars Date	day	1	31	1	1
0231		month	1	12	1	1
0232		year	1992	2999	1	1
0233	Min 3 Phase Mega Vars	MVars	–32767	32767	1	0.1
0234	Min 3 Phase Mega Vars Time	ms	0	999	1	1
0235		sec	0	59	1	1
0236		minute	0	59	1	1
0237		hour	1	23	1	1
0238	Min 3 Phase Mega Vars Date	day	1	31	1	1
0239		month	1	12	1	1
023A		year	1992	2999	1	1
023B	Last Reset Time	ms	0	999	1	1
023C		sec	0	59	1	1
023D		minute	0	59	1	1
023E		hour	1	23	1	1
023F	Last Reset Date	day	1	31	1	1
0240		month	1	12	1	1
0241		year	1992	2999	1	1
Thermal Metering						
0242	Temp Input 1	degrees (see Note 4)	–32767	32767	1	1
0243	Temp Input 2	degrees	–32767	32767	1	1
0244	Temp Input 3	degrees	–32767	32767	1	1
0245	Temp Input 4	degrees	–32767	32767	1	1
0246	Temp Input 5	degrees	–32767	32767	1	1
0247	Temp Input 6	degrees	–32767	32767	1	1
0248	Temp Input 7	degrees	–32767	32767	1	1
0249	Temp Input 8	degrees	–32767	32767	1	1

Address (Hex)	Field	Units	Range Low	Range High	Range Step	Scale Factor
024A	Temp Input 9	degrees	–32767	32767	1	1
024B	Temp Input 10	degrees	–32767	32767	1	1
024C	Temp Input 11	degrees	–32767	32767	1	1
024D	Temp Input 12	degrees	–32767	32767	1	1
024E	Reserved					
024F	Reserved					
Relay Time and Date						
0250	Time	ss (RW) (See Note 5)	0	59	1	1
0251		minute (RW)	0	59	1	1
0252		hour (RW)	1	23	1	1
0253	Date	day (RW)	1	31	1	1
0254		month (RW)	1	12	1	1
0255		year (RW)	1992	2999	1	1
0256–025F	Reserved					
Relay Word						
0260	Targets 1 EN BKR CLOSED LOP 60 TRIP 21/51V 50 51 N		0	65535	1	1
0261	Targets 2 24 27/59 32 40 46 64G 81 87		0	65535	1	1
0262	Input Contact Status 1 * * IN106 IN105 IN104 IN103 IN102 IN101		0	65535	1	1
0263	Input Contact Status 2 IN208 IN207 IN206 IN205 IN204 IN203		0	65535	1	1

Address (Hex)	Field	Units	Range Low	Range High	Range Step	Scale Factor
	IN202 IN201					
0264	Output Contact Status 1 ALARM OUT107 OUT106 OUT105 OUT104 OUT103 OUT102 OUT101		0	65535	1	1
0265	Output Contact Status 2 OUT201 OUT202 OUT203 OUT204 OUT205 OUT206 OUT207 OUT208		0	65535	1	1
0266	Output Contact Status 3 OUT209 OUT210 OUT211 OUT212 * * * *		0	65535	1	1
0267	Row 2 24TC 24D1 24D1T 24C2 24C2T 24CR SS1 SS2		0	65535	1	1
0268	Row 3 27P1 27P2 27PP1 27V1 59P1 59P2 59G1 59G2		0	65535	1	1
0269	Row 4 32PTC 32P1 32P1T 32P2 32P2T 59V1 59Q 59PP1		0	65535	1	1

Address (Hex)	Field	Units	Range Low	Range High	Range Step	Scale Factor
026A	Row 5		0	65535	1	1
	40ZTC					
	40Z1					
	40Z1T					
	40Z2					
	40Z2T					
	SWING					
	SG1					
	SG2					
026B	Row 6		0	65535	1	1
	46QTC					
	46Q1					
	46Q1T					
	46Q2					
	46Q2T					
	46Q2R					
	INAD					
	INADT					
026C	Row 7		0	65535	1	1
	78R1					
	78R2					
	78Z1					
	OOSTC					
	51CTC					
	51C					
	51CT					
	51CR					
026D	Row 8		0	65535	1	1
	51GTC					
	51G					
	51GT					
	51GR					
	51NTC					
	51N					
	51NT					
	51NR					
026E	Row 9		0	65535	1	1
	51VTC					
	51V					
	51VT					
	51VR					
	PDEM					
	QDEM					
	GDEM					
	NDEM					
026F	Row 10		0	65535	1	1
	50P1					
	50P1T					
	50P2					
	50P2T					
	50G1					
	50G1T					
	50G2					
	50G2T					

Address (Hex)	Field	Units	Range Low	Range High	Range Step	Scale Factor
0270	Row 11 50N1 50N1T 50N2 50N2T CC CL CLOSE ULCL		0	65535	1	1
0271	Row 12 64GTC 64G1 64G1T 64G2 64G2T OOS 60LOP CLEN		0	65535	1	1
0272	Row 13 BKMON BCW BCWA BCWB BCWC FAULT DCLO DCHI		0	65535	1	1
0273	Row 14 81D1 81D2 81D3 81D4 81D5 81D6 3PO 52A		0	65535	1	1
0274	Row 15 81D1T 81D2T 81D3T 81D4T 81D5T 81D6T 27B81 50L		0	65535	1	1
0275	Row 16 ONLINE BND1A BND1T BND2A BND2T BND3A BND3T BNDA		0	65535	1	1

Address (Hex)	Field	Units	Range Low	Range High	Range Step	Scale Factor
0276	Row 17		0	65535	1	1
	TRGTR					
	BND4A					
	BND4T					
	BND5A					
	BND5T					
	BND6A					
	BND6T					
	BNDT					
0277	Row 18		0	65535	1	1
	TRIP					
	TRIP1					
	TRIP2					
	TRIP3					
	TRIP4					
	OC1					
	OC2					
	OC3					
0278	Row 19		0	65535	1	1
	TR1					
	TR2					
	TR3					
	TR4					
	ULTR1					
	ULTR2					
	ULTR3					
	ULTR4					
0279	Row 20		0	65535	1	1
	LB1					
	LB2					
	LB3					
	LB4					
	LB5					
	LB6					
	LB7					
	LB8					
027A	Row 21		0	65535	1	1
	LB9					
	LB10					
	LB11					
	LB12					
	LB13					
	LB14					
	LB15					
	LB16					
027B	Row 22		0	65535	1	1
	RB1					
	RB2					
	RB3					
	RB4					
	RB5					
	RB6					
	RB7					
	RB8					

Address (Hex)	Field	Units	Range Low	Range High	Range Step	Scale Factor
027C	Row 23		0	65535	1	1
	RB9					
	RB10					
	RB11					
	RB12					
	RB13					
	RB14					
	RB15					
	RB16					
027D	Row 24		0	65535	1	1
	21CTC					
	21C1P					
	21C1T					
	21C2P					
	21C2T					
	ZLOAD					
	T64G					
	N64G					
027E	Row 25		0	65535	1	1
	SV1					
	SV2					
	SV3					
	SV4					
	SV1T					
	SV2T					
	SV3T					
	SV4T					
027F	Row 26		0	65535	1	1
	SV5					
	SV6					
	SV7					
	SV8					
	SV5T					
	SV6T					
	SV7T					
	SV8T					
0280	Row 27		0	65535	1	1
	SV9					
	SV10					
	SV11					
	SV12					
	SV9T					
	SV10T					
	SV11T					
	SV12T					
0281	Row 28		0	65535	1	1
	SV13					
	SV14					
	SV15					
	SV16					
	SV13T					
	SV14T					
	SV15T					
	SV16T					

Address (Hex)	Field	Units	Range Low	Range High	Range Step	Scale Factor
0282	Row 29		0	65535	1	1
	DP8					
	DP7					
	DP6					
	DP5					
	DP4					
	DP3					
	DP2					
	DP1					
0283	Row 30		0	65535	1	1
	DP16					
	DP15					
	DP14					
	DP13					
	DP12					
	DP11					
	DP10					
	DP9					
0284	Row 31		0	65535	1	1
	ER					
	OOST					
	IN106					
	IN105					
	IN104					
	IN103					
	IN102					
	IN101					
0285	Row 32		0	65535	1	1
	ALARM					
	OUT107					
	OUT106					
	OUT105					
	OUT104					
	OUT103					
	OUT102					
	OUT101					
0286	Row 33		0	65535	1	1
	87B					
	87BL1					
	87BL2					
	87BL3					
	87R					
	87R1					
	87R2					
	87R3					
0287	Row 34		0	65535	1	1
	87U					
	87U1					
	87U2					
	87U3					
	50H1					
	50H1T					
	50H2					
	50H2T					

Address (Hex)	Field	Units	Range Low	Range High	Range Step	Scale Factor
0288	Row 35		0	65535	1	1
	50Q1					
	50Q1T					
	50Q2					
	50Q2T					
	50R1					
	50R1T					
	50R2					
	50R2T					
0289	Row 36		0	65535	1	1
	59VP					
	59VS					
	CFA					
	BKRCF					
	BSYNCH					
	25C					
	25A1					
	25A2					
028A	Row 37		0	65535	1	1
	59PP2					
	27PP2					
	SF					
	VDIF					
	GENVHI					
	GENVLO					
	GENFHI					
	GENFLO					
028B	Row 38		0	65535	1	1
	87NTC					
	87N1P					
	87N1T					
	87N2P					
	87N2T					
	MPP1P					
	MABC1P					
	27VS					
028C	Row 39		0	65535	1	1
	21PTC					
	21P1P					
	21P1T					
	21P2P					
	21P2T					
	MPP2P					
	MABC2P *					
028D	Row 40		0	65535	1	1
	IN208					
	IN207					
	IN206					
	IN205					
	IN204					
	IN203					
	IN202					
	IN201					

Address (Hex)	Field	Units	Range Low	Range High	Range Step	Scale Factor
028E	Row 41		0	65535	1	1
	64FTC					
	64F1					
	64F1T					
	64F2					
	64F2T					
	64FFLT					
	*					
	*					
028F	Row 42		0	65535	1	1
	OUT201					
	OUT202					
	OUT203					
	OUT204					
	OUT205					
	OUT206					
	OUT207					
	OUT208					
0290	Row 43		0	65535	1	1
	OUT209					
	OUT210					
	OUT211					
	OUT212					
	*					
	*					
	*					
	*					
0291	Row 44		0	65535	1	1
	50H2A					
	50H2B					
	50H2C					
	*					
	*					
	*					
	*					
	*					
0292	Row 45		0	65535	1	1
	*					
	*					
	*					
	*					
	*					
	*					
	*					
	*					
0293	Row 46		0	65535	1	1
	SET1					
	SET2					
	SET3					
	SET4					
	SET5					
	SET6					
	SET7					
	SET8					

Address (Hex)	Field	Units	Range Low	Range High	Range Step	Scale Factor
0294	Row 47		0	65535	1	1
	SET9					
	SET10					
	SET11					
	SET12					
	SET13					
	SET14					
	SET15					
	SET16					
0295	Row 48		0	65535	1	1
	RST1					
	RST2					
	RST3					
	RST4					
	RST5					
	RST6					
	RST7					
	RST8					
0296	Row 49		0	65535	1	1
	RST9					
	RST10					
	RST11					
	RST12					
	RST13					
	RST14					
	RST15					
	RST16					
0297	Row 50		0	65535	1	1
	LT1					
	LT2					
	LT3					
	LT4					
	LT5					
	LT6					
	LT7					
	LT8					
0298	Row 51		0	65535	1	1
	LT9					
	LT10					
	LT11					
	LT12					
	LT13					
	LT14					
	LT15					
	LT16					
0299	Row 52		0	65535	1	1
	OTHTRIP					
	OTHALRM					
	AMBTRIP					
	AMBALRM					
	BRGTRIP					
	BRGALRM					
	WDGTRIP					
	WDGALRM					

Address (Hex)	Field	Units	Range Low	Range High	Range Step	Scale Factor
029A	Row 53		0	65535	1	1
	RTDFLT					
	*					
	*					
	*					
	*					
	*					
	*					
	2600IN					
029B	Row 54		0	65535	1	1
	RTD4TR					
	RTD4AL					
	RTD3TR					
	RTD3AL					
	RTD2TR					
	RTD2AL					
	RTD1TR					
	RTD1AL					
029C	Row 55		0	65535	1	1
	RTD8TR					
	RTD8AL					
	RTD7TR					
	RTD7AL					
	RTD6TR					
	RTD6AL					
	RTD5TR					
	RTD5AL					
029D	Row 56		0	65535	1	1
	RTD12TR					
	RTD12AL					
	RTD11TR					
	RTD11AL					
	RTD10TR					
	RTD10AL					
	RTD9TR					
	RTD9AL					
029E–029F	Reserved					
Commands						
02A0	Command Code	(W) (See Note 5)				
02A1	Parameter 1	(W)				
02A2	Parameter 2	(W)				
02A3–02AF	Reserved					
History Records (See Note 6)						
02B0	Number of History Records		0	29	—	—
02B1	History Selection	(RW) (see Note 6)	1	29	1	1
02B2	Event Time	ms	0	999	1	1
02B3		sec	0	59	1	1
02B4		minute	0	59	1	1

Address (Hex)	Field	Units	Range Low	Range High	Range Step	Scale Factor
02B5		hour	0	23	1	1
02B6	Event Date	day	1	31	1	1
02B7		month	1	12	1	1
02B8		year	1992	2999	1	1
02B9	Event type	ASCII string (see Note 1)				
02BA		(See Note 2)				
02BB						
02BC						
02BD	Event Type Code	(See Note 8)				
02BE	Current		0	65535	1	1
02BF	Frequency		20	7000	1	0.01
02C0	Group		1	2	1	1
02C1	Targets 1 EN BKR CLOSED LOP 60 TRIP 21/51V 50 51 N		0	65535	1	1
02C2	Targets 2 24 27/59 32 40 46 64G 81 87		0	65535	1	1
02C3–02CF	Reserved					
Event Reporting (See Note 3)						
02D0	Number of Event Records		0	29	—	—
02D1	Event Record Selection	(RW) (See Note 5)	1	29	1	1
02D2	Event Channel Selection	(RW) (See Note 6)	1	68	1	1
02D3	¼ cycle	(See Note 7)	–32767	32767	1	
02D4	½ cycle		–32767	32767	1	
02D5	¾ cycle		–32767	32767	1	
02D6	1 cycle		–32767	32767	1	
02D7	1 ¼ cycle		–32767	32767	1	
02D8	1 ½ cycle		–32767	32767	1	
02D9	1 ¾ cycle		–32767	32767	1	

Address (Hex)	Field	Units	Range			Scale Factor
			Low	High	Step	
02DA	2 cycle		–32767	32767	1	
02DB	2 ¼ cycle		–32767	32767	1	
02DC	2 ½ cycle		–32767	32767	1	
02DD	2 ¾ cycle		–32767	32767	1	
02DE	3 cycle		–32767	32767	1	
02DF	3 ¼ cycle		–32767	32767	1	
02E0	3 ½ cycle		–32767	32767	1	
02E1	3 ¾ cycle		–32767	32767	1	
02E2	4 cycle		–32767	32767	1	
02E3	4 ¼ cycle		–32767	32767	1	
02E4	4 ½ cycle		–32767	32767	1	
02E5	4 ¾ cycle		–32767	32767	1	
02E6	5 cycle		–32767	32767	1	
02E7	5 ¼ cycle		–32767	32767	1	
02E8	5 ½ cycle		–32767	32767	1	
02E9	5 ¾ cycle		–32767	32767	1	
02EA	6 cycle		–32767	32767	1	
02EB	6 ¼ cycle		–32767	32767	1	
02EC	6 ½ cycle		–32767	32767	1	
02ED	6 ¾ cycle		–32767	32767	1	
02EE	7 cycle		–32767	32767	1	
02EF	7 ¼ cycle		–32767	32767	1	
02F0	7 ½ cycle		–32767	32767	1	
02F1	7 ¾ cycle		–32767	32767	1	
02F2	8 cycle		–32767	32767	1	
02F3	8 ¼ cycle		–32767	32767	1	
02F4	8 ½ cycle		–32767	32767	1	
02F5	8 ¾ cycle		–32767	32767	1	
02F6	9 cycle		–32767	32767	1	
02F7	9 ¼ cycle		–32767	32767	1	
02F8	9 ½ cycle		–32767	32767	1	
02F9	9 ¾ cycle		–32767	32767	1	
02FA	10 cycle		–32767	32767	1	
02FB	10 ¼ cycle		–32767	32767	1	
02FC	10 ½ cycle		–32767	32767	1	
02FD	10 ¾ cycle		–32767	32767	1	
02FE	11 cycle		–32767	32767	1	
02FF	11 ¼ cycle		–32767	32767	1	
0300	11 ½ cycle		–32767	32767	1	
0301	11 ¾ cycle		–32767	32767	1	
0302	12 cycle		–32767	32767	1	

Address (Hex)	Field	Units	Range			Scale Factor
			Low	High	Step	
0303	12 ¼ cycle		–32767	32767	1	
0304	12 ½ cycle		–32767	32767	1	
0305	12 ¾ cycle		–32767	32767	1	
0306	13 cycle		–32767	32767	1	
0307	13 ¼ cycle		–32767	32767	1	
0308	13 ½ cycle		–32767	32767	1	
0309	13 ¾ cycle		–32767	32767	1	
030A	14 cycle		–32767	32767	1	
030B	14 ¼ cycle		–32767	32767	1	
030C	14 ½ cycle		–32767	32767	1	
030D	14 ¾ cycle		–32767	32767	1	
030E	15 cycle		–32767	32767	1	
030F	15 ¼ cycle		–32767	32767	1	
0310	15 ½ cycle		–32767	32767	1	
0311	15 ¾ cycle		–32767	32767	1	
0312	16 cycle		–32767	32767	1	
0313	16 ¼ cycle		–32767	32767	1	
0314	16 ½ cycle		–32767	32767	1	
0315	16 ¾ cycle		–32767	32767	1	
0316	17 cycle		–32767	32767	1	
0317	17 ¼ cycle		–32767	32767	1	
0318	17 ½ cycle		–32767	32767	1	
0319	17 ¾ cycle		–32767	32767	1	
031A	18 cycle		–32767	32767	1	
031B	18 ¼ cycle		–32767	32767	1	
031C	18 ½ cycle		–32767	32767	1	
031D	18 ¾ cycle		–32767	32767	1	
031E	19 cycle		–32767	32767	1	
031F	19 ¼ cycle		–32767	32767	1	
0320	19 ½ cycle		–32767	32767	1	
0321	19 ¾ cycle		–32767	32767	1	
0322	20 cycle		–32767	32767	1	
0323	20 ¼ cycle		–32767	32767	1	
0324	20 ½ cycle		–32767	32767	1	
0325	20 ¾ cycle		–32767	32767	1	
0326	21 cycle		–32767	32767	1	
0327	21 ¼ cycle		–32767	32767	1	
0328	21 ½ cycle		–32767	32767	1	
0329	21 ¾ cycle		–32767	32767	1	
032A	22 cycle		–32767	32767	1	
032B	22 ¼ cycle		–32767	32767	1	

Address (Hex)	Field	Units	Range Low	Range High	Range Step	Scale Factor
032C	22 ½ cycle		–32767	32767	1	
032D	22 ¾ cycle		–32767	32767	1	
032E	23 cycle		–32767	32767	1	
032F	23 ¼ cycle		–32767	32767	1	
0330	23 ½ cycle		–32767	32767	1	
0331	23 ¾ cycle		–32767	32767	1	
0332	24 cycle		–32767	32767	1	
0333	24 ¼ cycle		–32767	32767	1	
0334	24 ½ cycle		–32767	32767	1	
0335	24 ¾ cycle		–32767	32767	1	
0336	25 cycle		–32767	32767	1	
0337	25 ¼ cycle		–32767	32767	1	
0338	25 ½ cycle		–32767	32767	1	
0339	25 ¾ cycle		–32767	32767	1	
033A	26 cycle		–32767	32767	1	
033B	26 ¼ cycle		–32767	32767	1	
033C	26 ½ cycle		–32767	32767	1	
033D	26 ¾ cycle		–32767	32767	1	
033E	27 cycle		–32767	32767	1	
033F	27 ¼ cycle		–32767	32767	1	
0340	27 ½ cycle		–32767	32767	1	
0341	27 ¾ cycle		–32767	32767	1	
0342	28 cycle		–32767	32767	1	
0343	28 ¼ cycle		–32767	32767	1	
0344	28 ½ cycle		–32767	32767	1	
0345	28 ¾ cycle		–32767	32767	1	
0346	29 cycle		–32767	32767	1	
0347	29 ¼ cycle		–32767	32767	1	
0348	29 ½ cycle		–32767	32767	1	
0349	29 ¾ cycle		–32767	32767	1	
034A	30 cycle		–32767	32767	1	
Event Summary Data (requires Channel 16 Selection. See Note 6.)						
034B	Event Time	ms	0	999	1	1
034C		sec	0	59	1	1
034D		minute	0	59	1	1
034E		hour	0	23	1	1
034F	Event Date	day	1	31	1	1
0350		month	1	12	1	1
0351		year	1992	2999	1	1
0352	Event type	ASCII string (see Note 1)				

Address (Hex)	Field	Units	Range Low	Range High	Range Step	Scale Factor
0353		(see Note 2)				
0354						
0355						
0356	Event Type Code	(see Note 8)				
0357	Frequency	Hz	0	65535	1	0.01
0358	Targets 1 EN BKR CLOSED LOP 60 TRIP 21/51V 50 51 N		0	65535	1	1
0359	Targets 2 24 27/59 32 40 46 64G 81 87		0	65535	1	1
035A	Current Phase A	Amps	0	65535	1	1
035B	Current Phase B	Amps	0	65535	1	1
035C	Current Phase C	Amps	0	65535	1	1
035D	Neutral Current IN	Amps	0	65535	1	1
035E	Residual Current IG	Amps	0	65535	1	1
035F	Negative Sequence Current 3I2	Amps	0	65535	1	1
0360	Current IA87	Amps	0	65535	1	1
0361	Current IB87	Amps	0	65535	1	1
0362	Current IC87	Amps	0	65535	1	1
0363–036F	Reserved					
Sequence of Event Records (See Note 6)						
0370	Number of Sequence of Events Records		0	512	—	—
0371	SERSelection	(RW) (See Note 5)	1	512	1	1
0372	SER Time	ms	0	999	1	1
0373		sec	0	59	1	1
0374		minute	0	59	1	1
0375		hour	0	23	1	1
0376	SER Date	day	1	31	1	1
0377		month	1	12	1	1
0378		year	1992	2999	1	1

Address (Hex)	Field	Units	Range Low	Range High	Range Step	Scale Factor
0379	Element	(See Note 9)				
037A	State	(See Note 9)				
037B–037F	Reserved					
Sync Check Report (See Note 6)						
0380	Number of Sync Check Reports		0	3	—	—
0381	Sync Check Report Selection	(RW) (See Note 5)	1	3	1	1
0382	CLOSE Asserted At (Time)	ms	0	999	1	1
0383		sec	0	59	1	1
0384		minute	0	59	1	1
0385		hour	0	23	1	1
0386	CLOSE Asserted At (Date)	day	1	31	1	1
0387		month	1	12	1	1
0388		year	1992	2999	1	1
0389	Slip Frequency	Hz	0	5000	1	0.01
038A	Generator Frequency	Hz	20	18000	1	0.01
038B	System Frequency	Hz	20	7000	1	0.01
038C	Voltage Diff.	%	0	65535	1	0.01
038D	Generator Voltage	kV	0	65535	1	0.01
038E	System Voltage	kV	0	65535	1	0.01
038F	Slip Compensated Phase Angle Diff	degree	–18000	18000	1	0.01
0390	Uncompensated Phase Angle Diff	degree	–18000	18000	1	0.01
0391	BKRCF Asserted At	ms	0	999	1	1
0392		sec	0	59	1	1
0393		minute	0	59	1	1
0394		hour	0	23	1	1
0395	Slip Frequency	Hz	0	5000	1	0.01
0396	Generator Frequency	Hz	20	18000	1	0.01
0397	System Frequency	Hz	20	7000	1	0.01
0398	Voltage Diff.	%	0	65535	1	0.01
0399	Generator Voltage	kV	0	65535	1	0.01
039A	System Voltage	kV	0	65535	1	0.01
039B	Slip Compensated Phase Angle Diff	degree	–18000	18000	1	0.01
039C	Uncompensated Phase Angle Diff	degree	–18000	18000	1	0.01
039D	3PO Deasserted At (Time)	ms	0	999	1	1
039E		sec	0	59	1	1
039F		minute	0	59	1	1

Address (Hex)	Field	Units	Range Low	Range High	Range Step	Scale Factor
03A0		hour	0	23	1	1
03A1	Breaker Close Time	sec	0	65535	1	0.01
03A2	Average Breaker Close Time	sec	0	65535	1	0.01
03A3	Close Operations		0	65535	1	1
03A4	Last Reset Time	ms	0	999	1	1
03A5		sec	0	59	1	1
03A6		minute	0	59	1	1
03A7		hour	0	23	1	1
03A8	Last Reset Date	day	1	31	1	1
03A9		month	1	12	1	1
03AA		year	1992	2999	1	1
03AB–03AF	Reserved					
Breaker Monitor						
03B0	Internal Trips		0	65535	1	1
03B1	IA Current	Amps	0	65535	1	0.1
03B2	IB Current	Amps	0	65535	1	0.1
03B3	IC Current	Amps	0	65535	1	0.1
03B4	External Trips		0	65535	1	1
03B5	IA Current	Amps	0	65535	1	0.1
03B6	IB Current	Amps	0	65535	1	0.1
03B7	IC Current	Amps	0	65535	1	0.1
03B8	% wear Phase A		0	65535	1	1
03B9	% wear Phase B		0	65535	1	1
03BA	% wear Phase C		0	65535	1	1
03BB	Last Reset Time	sec	0	59	1	1
03BC		minute	0	59	1	1
03BD		hour	0	23	1	1
03BE	Last Reset Date	day	1	31	1	1
03BF		month	1	12	1	1
03C0		year	1992	2999	1	1
03C1	64FOPT Setting value 0 = NONE (OFF), 1 = EXT (ON)		0	1		1
03C2	Field Insulation Rf (kOhms) (65535 when Rf unavailable)		0	65000	1	0.1
03C3–03CF	Reserved					
Generator Operation Profile (See Note 10)						
03D0	Time Accumulator Since (Time)	minute	0	59	1	1
03D1		hour	1	23	1	1
03D2	Time Accumulator Since (Date)	day	1	31	1	1
03D3		month	1	12	1	1

Address (Hex)	Field	Units	Range			Scale Factor
			Low	High	Step	
03D4		year	1992	2999	1	1
03D5	Frequency Band 1, Time Accumulator	sec	0	65535	1	0.1
03D6	% of limit setting	%	0	65535	1	0.1
03D7	Frequency Band 2, Time Accumulator	sec	0	65535	1	0.1
03D8	% of limit setting	%	0	65535	1	0.1
03D9	Frequency Band 3, Time Accumulator	sec	0	65535	1	0.1
03DA	% of limit setting	%	0	65535	1	0.1
03DB	Frequency Band 4, Time Accumulator	sec	0	65535	1	0.1
03DC	% of limit setting	%	0	65535	1	0.1
03DD	Frequency Band 5, Time Accumulator	sec	0	65535	1	0.1
03DE	% of limit setting	%	0	65535	1	0.1
03DF	Frequency Band 6, Time Accumulator	sec	0	65535	1	0.1
03E0	% of limit setting	%	0	65535	1	0.1
03E1	Operating History Since (Time)	minute	0	59	1	1
03E2		hour	0	23	1	1
03E3	Operating History Since (Date)	day	1	31	1	1
03E4		month	1	12	1	1
03E5		year	1992	2999	1	1
03E6	Running hours	sec	0	59	1	1
03E7		minute	0	59	1	1
03E8		hour	0	23	1	1
03E9		day	1	31	1	1
03EA	Stopped hours	sec	0	59	1	1
03EB		minute	0	59	1	1
03EC		hour	0	23	1	1
03ED		day	1	31	1	1
03EE	Full load hours	sec	0	59	1	1
03EF		minute	0	59	1	1
03F0		hour	0	23	1	1
03F1		day	1	31	1	1
03F2	% Time running	%	0	65535	1	0.1
03F3	Accumulated I2*I2*t (A*A*s)		1	65535	1	0.1
03F4	Average Power Since (Time)	minute	0	59	1	1
03F5		hour	0	23	1	1
03F6	Average Power Since (Date)	day	1	31	1	1
03F7		month	1	12	1	1

Address (Hex)	Field	Units	Range			Scale Factor
			Low	High	Step	
03F8		year	1992	2999	1	1
03F9	MW out	MWatts	–32767	32767	1	0.1
03FA	MVAR out	MVars	–32767	32767	1	0.1
03FB	MVAR in	MVars	–32767	32767	1	0.1
03FC	Power factor	%	0	100	1	0.1
03FD	LEAD/LAG Power Factor 0 = LAG, 1 = LEAD					
03FE–03FF	Reserved					
Maximum Current Limit						
0400	Multiplier (Phase Current)	Amps	0	65535	1	1
0401	Scale	Exponent	–4	4	1	1
0402	Multiplier (Phase Voltage)	kV	0	65535	1	1
0403	Scale	Exponent	–4	4	1	1
0404	Multiplier (Total Power)	MWatts	0	65535	1	1
0405	Scale	Exponent	–4	4	1	1
0406–040F	Reserved					
Communication Counter						
0410	Number of messages received		0	65535	1	1
0411	Number of messages sent to other devices		0	65535	1	1
0412	Invalid address		0	65535	1	1
0413	Bad CRC		0	65535	1	1
0414	UART error		0	65535	1	1
0415	Illegal function code / Op code		0	65535	1	1
0416	Illegal register		0	65535	1	1
0417	Illegal write		0	65535	1	1
0418	Bad packet format		0	65535	1	1
0419	Bad packet length		0	65535	1	1
041A–0420	Reserved					
1FFB	Device Tag #	15045				
1FFC	FEATURE SET ID	0				
1FFD–FFFF	Reserved					

All registers are 16 bits with bit locations ranging from 0 to 15. Relay Words and targets are bitmapped in bit positions 8 through 15 in the register. The 0 bit position is set to 1 if any of the 8–15 positions are set to 1.

When Scale Factor is shown, you must multiply data in the Address by the Scale Factor. For example, if data in the Address 0091 is 3000, (Phase A Current Angle) = 3000*0.01 = 30 degrees.

(DELTA_Y=Y)**
If Delta_Y = D (delta) then you will get phase-to-phase voltage and total MWatts and MVars.
If Delta_Y = Y then you will get phase to neutral voltage as well as per phase and total MWatts and MVars.

Note 1 Two 8 bit ASCII characters per register

Note 2 Reserved addresses return 8000h.

Note 3 All values (magnitude, date, and time) will be set to 0xFFFF if any quantity is in reset state.

Note 4 All values are in degrees Centigrade or degrees Fahrenheit based on relay setting TEMREF.

Note 5 Registers (RW) are read write registers
Registers (W) are write only registers
Registers (R) are read only registers
All other registers are read only

Note 6 Event and History Reporting:
The Modbus Register Map listed above provides a feature that allows you to download complete event data, History data, SER data, Sync Check Report data, or Generator Operation Profile data via Modbus. The SEL-300G stores the twenty-nine latest event reports, twenty-nine latest event summaries (History data), 512 SER, Generator Operating Profile data, and three Sync Check Report in nonvolatile memory. If BKRCF is not asserted during synchronism, then the time for RKRCF asserted will be 8000h, 8000h, 8000h, 8000h, and the following information, from slip frequency to uncompensated phase angle difference, will all be 8000h. The event report extraction will be through 68 channels. These channels must be assigned as follows:

Ch1	IA	Ch7	VB	Ch13	IA87
Ch2	IB	Ch8	VC	Ch14	IB87
Ch3	IC	Ch9	VN	Ch15	IC87
Ch4	IN	Ch10	VS	Ch16	Event Report Summary
Ch5	IG	Ch11	Vdc	Ch17	
Ch6	VA	Ch12	Frequency	to Ch68	RELAY WORDS

The main intent of the event report extraction is as follows:
At each quarter cycle the following information should be retrievable: Input currents and Voltages, Vdc and Frequency, and the 51 rows of relay words associated with the applications.

Note 7 The scaling factor for ch6–ch11 is 0.1; the scaling factor for ch12 is 0.01; the rest of them use 1 as scaling factor.

Note 8 EVENT TYPES:

ASCII	CODE
TRIG	1
PULSE	2
TRIP	4
ER	8

Note 9 Element field in SER report will have index number defined in Table F.7.
Element field = 0xffff means that this is Relay newly powered up or settings changed. Event State field in SER report will be 0 or 1.

Note 10 If E81AC = N, then all data from row of 81AC Off–Freq Time Accumulator Since to row of Frequency Band 6, Time Accumulator and % of limit setting will be set as 0x8000.

APPENDIX G: ACSELERATOR QUICKSET SEL-5030 SOFTWARE

OVERVIEW

The ACSELERATOR® QuickSet™ SEL-5030 Software is an easy-to-use yet powerful tool to help get the most out of your SEL-300G Relay.

Using the ACSELERATOR QuickSet software, you will be able to:

Create, test, and manage settings with a Windows® interface.

Visually design SELOGIC® control equations with the Expression Builder, a rules-based editor.

Analyze power system events from SEL relays with integrated Waveform and Harmonic Analysis tools.

Communicate with SEL devices via an HMI interface with integrated Meter and Control functions.

Create, manage, copy, merge, and read relay settings with a settings database manager.

This document gives instructions for installing the ACSELERATOR QuickSet software. A Quick Tour guide is available as part of the online help.

Like all SEL relay products, the SEL-300G can also be set and operated by a simple ASCII teminal.

THE ACSELERATOR QUICKSET SYSTEM REQUIREMENTS:

CPU:	Pentium class (recommended 90 MHz or faster)
Operating System:	Windows 98/Me/NT4 SP3 with 32 MB ram (64 MB ram recommended)
	Windows 2000 or later with 64 MB ram
Disk Space:	150 MB
Communications:	EIA-232 serial port for communicating with the relay
CD drive:	Required for installation

INSTALLATION

To install the ACSELERATOR QuickSet software, perform the following steps.
Close all other software applications on your PC.

Step 1. Insert the ACSELERATOR QuickSet software CD into the CD-ROM drive of the PC.

The installation program should start automatically.

Step 2. If the install program does not start, perform the following steps:

a. Select **Run** from the windows start menu.
b. Type in the following command **D:\SETUP** (substitute D:\ with your PC's CD-ROM drive letter).

Step 3. Follow the steps that appear on the screen.

The installation program will perform all the necessary steps to load the ACSELERATOR QuickSet software onto your PC.

It is necessary to have the correct comctl32.dll file installed on your computer in order to see the toolbar buttons. If you do not see the toolbar buttons, run the 40ComUpd.exe, located in the install directory. This file will install the proper windows system drivers.

STARTING THE ACSELERATOR QUICKSET SOFTWARE

You can start the ACSELERATOR QuickSet software in one of the following ways:

Double-click the ACSELERATOR QuickSet software icon if you have a desktop shortcut.

Choose **Programs > SEL Applications** and select the ACSELERATOR QuickSet software icon to start the program.

APPENDIX H: DIFFERENTIAL CONNECTION DIAGRAMS

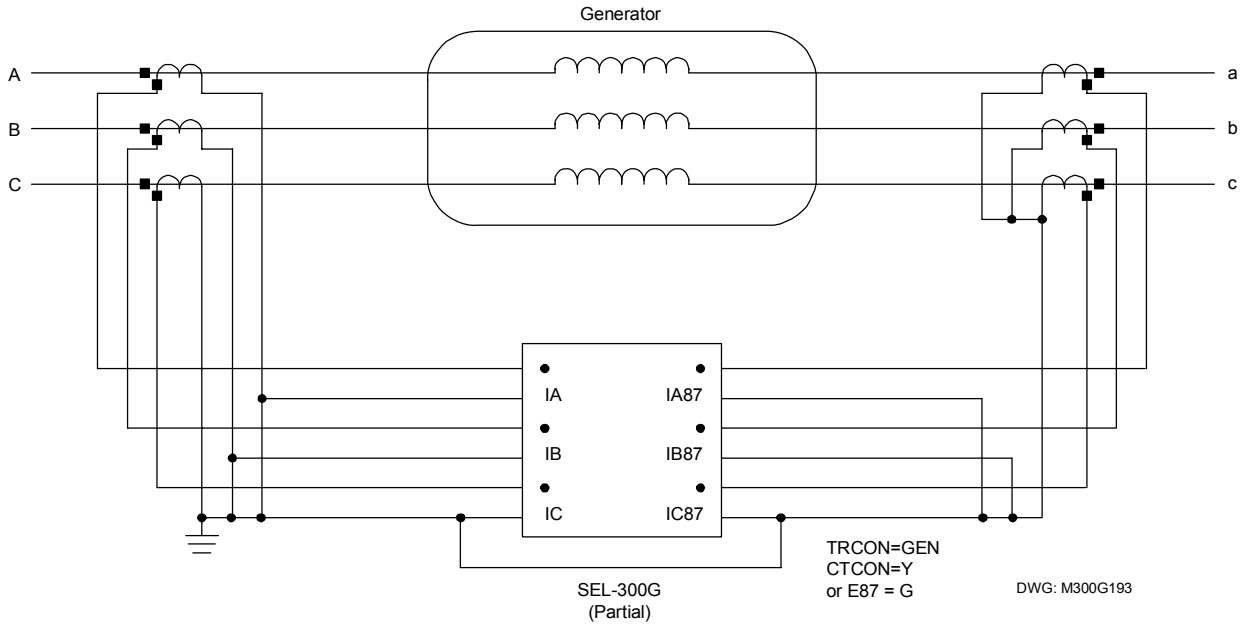

Figure H.1: Protected Generator With No Step-Up Transformer

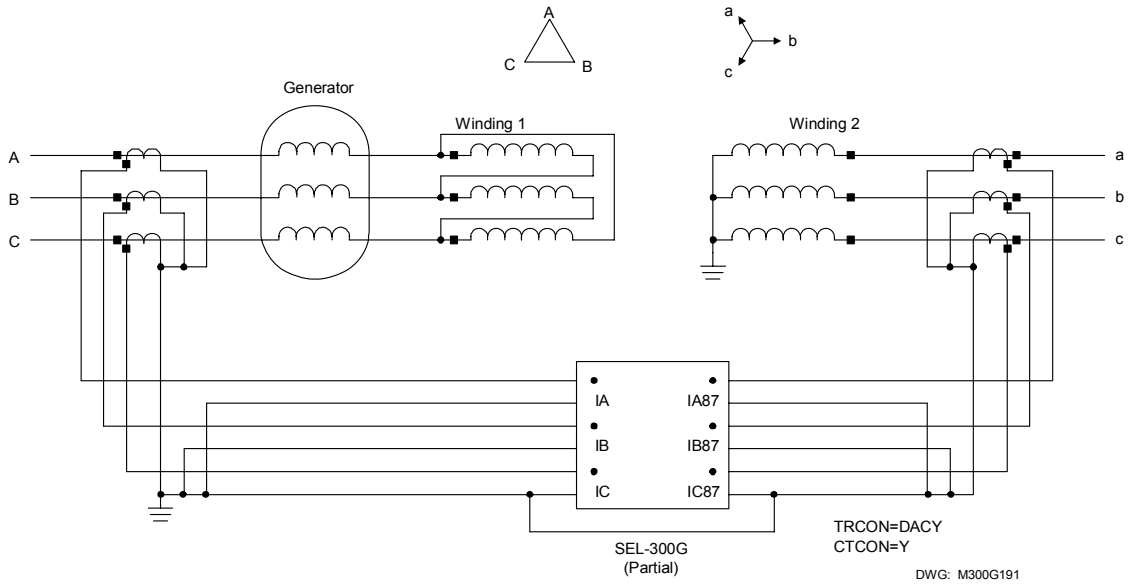

Figure H.2: Delta-Wye Power Transformer With Wye High-Side CT Connections

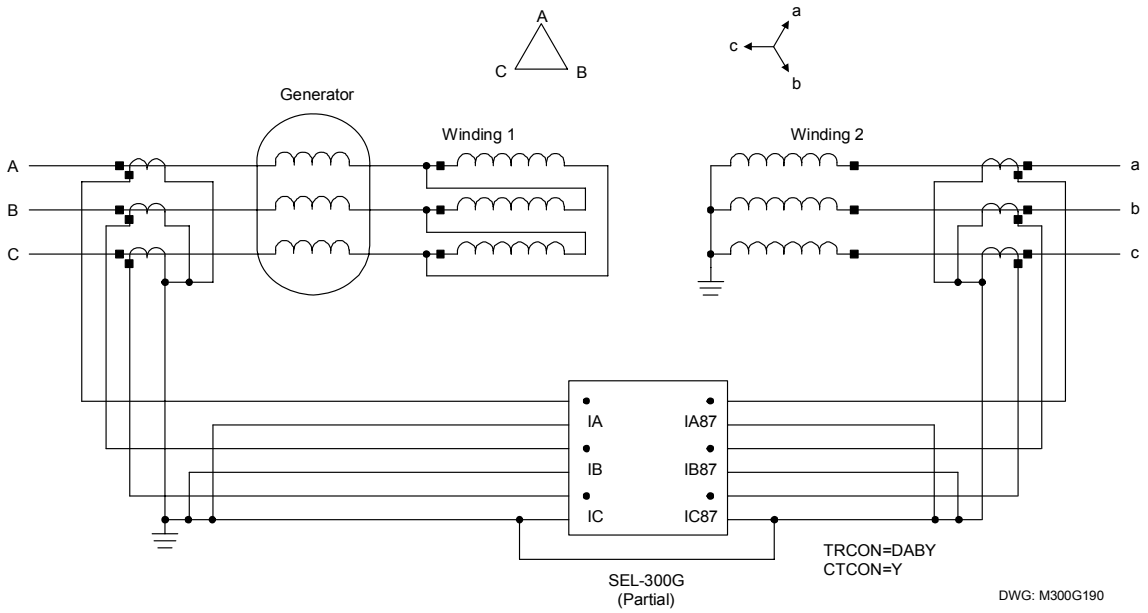

Figure H.3: Delta-Wye Power Transformer With Wye High-Side CT Connections

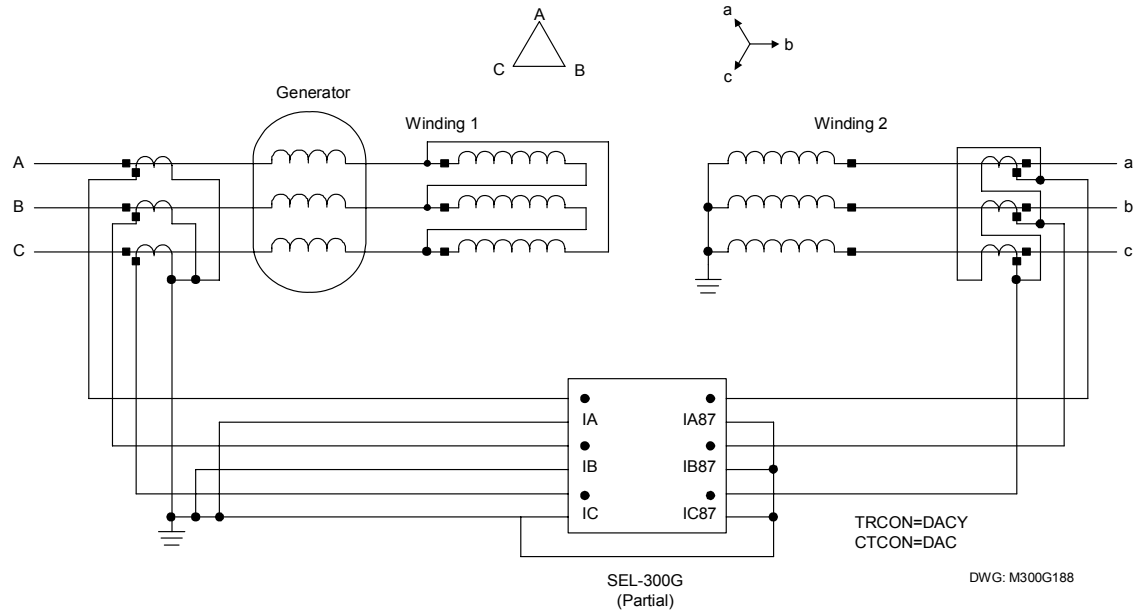

Figure H.4: Delta-Wye Power Transformer With Delta High-Side CT Connections

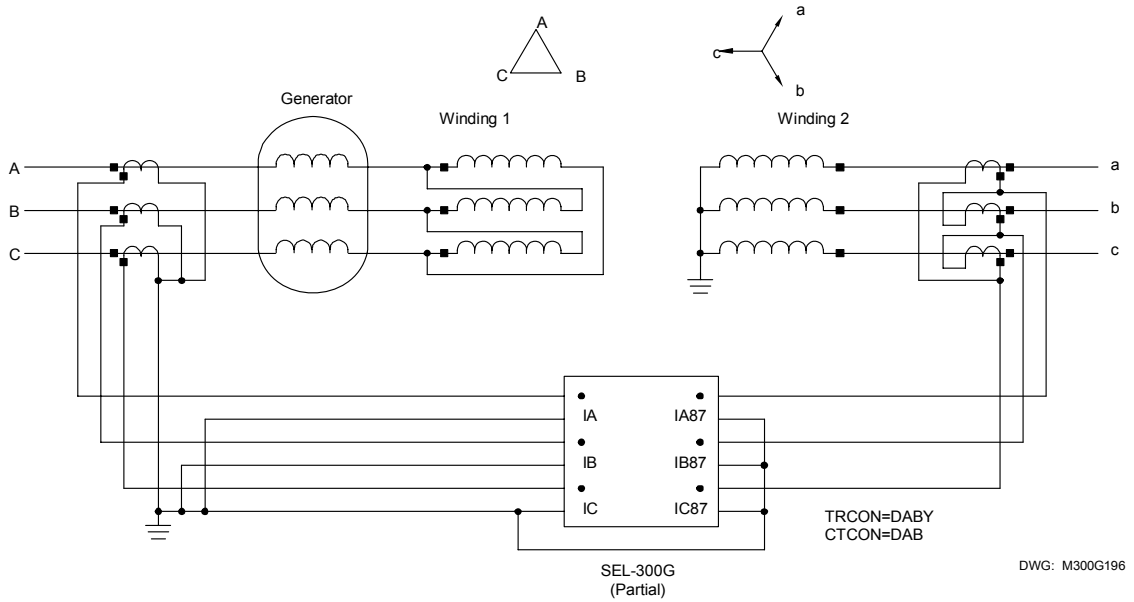

Figure H.5: Delta-Wye Power Transformer With Delta High-Side CT Connections

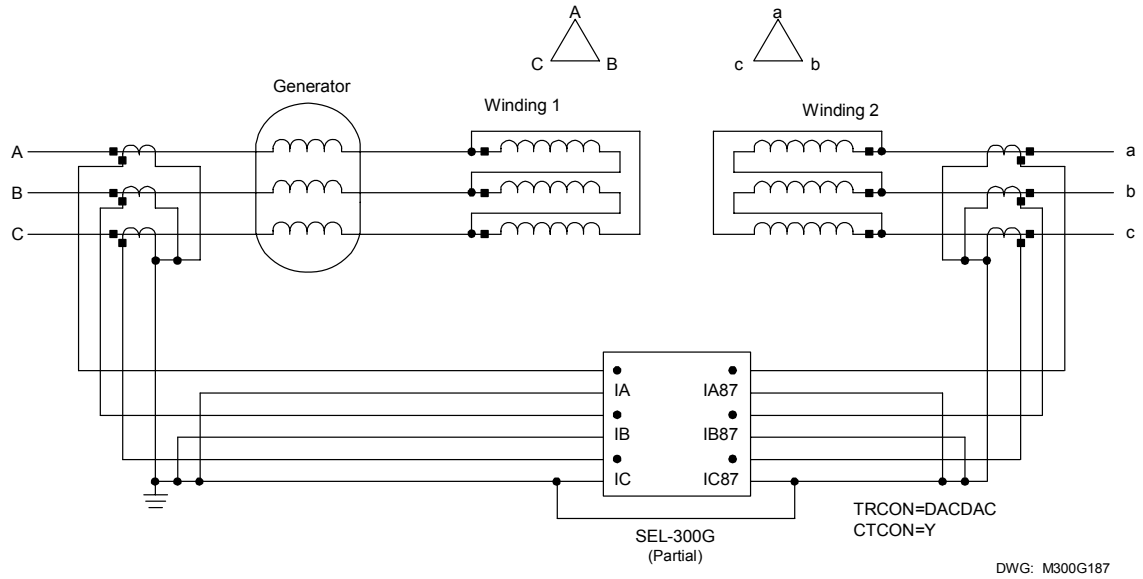

Figure H.6: Delta-Delta Power Transformer With Wye High-Side CT Connections

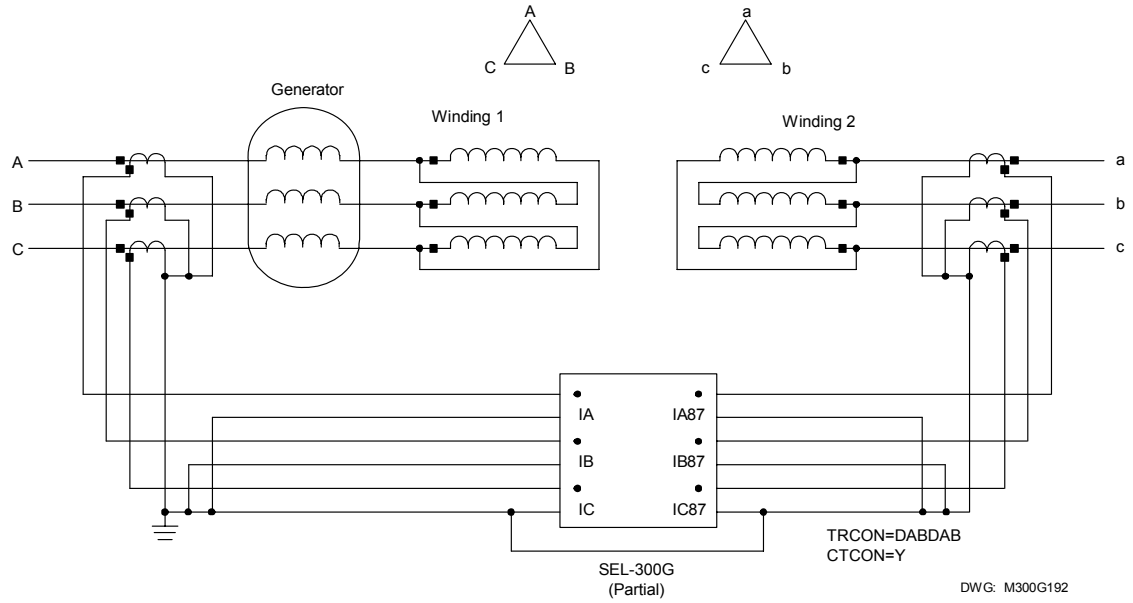

Figure H.7: Delta-Delta Power Transformer With Wye High-Side Connections

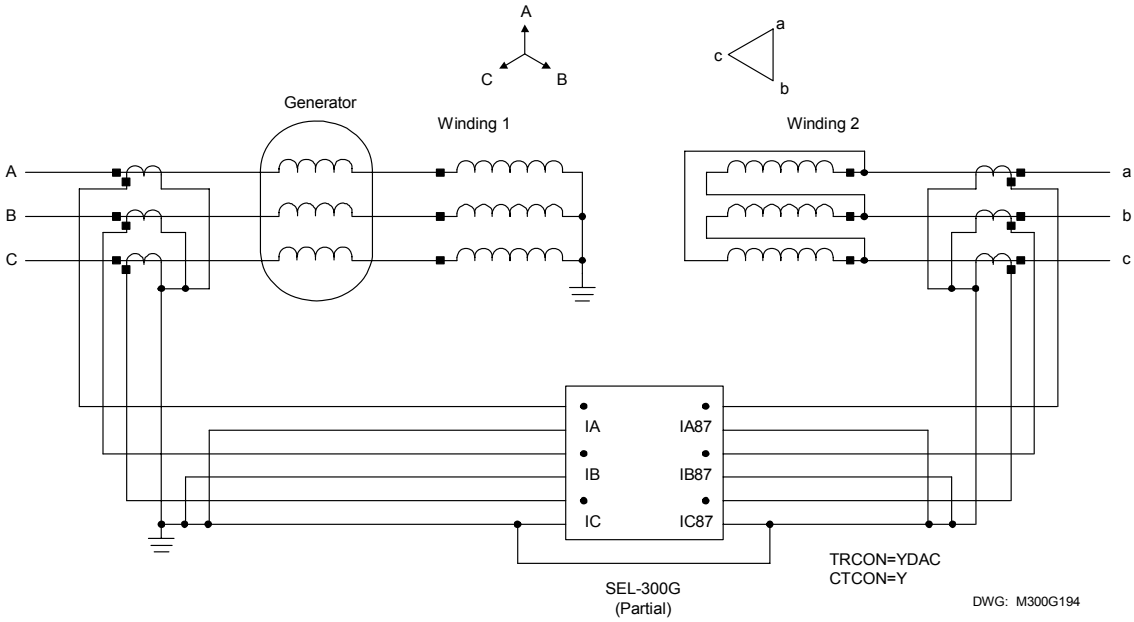

Figure H.8: Wye-Delta Power Transformer With Wye High-Side Connections

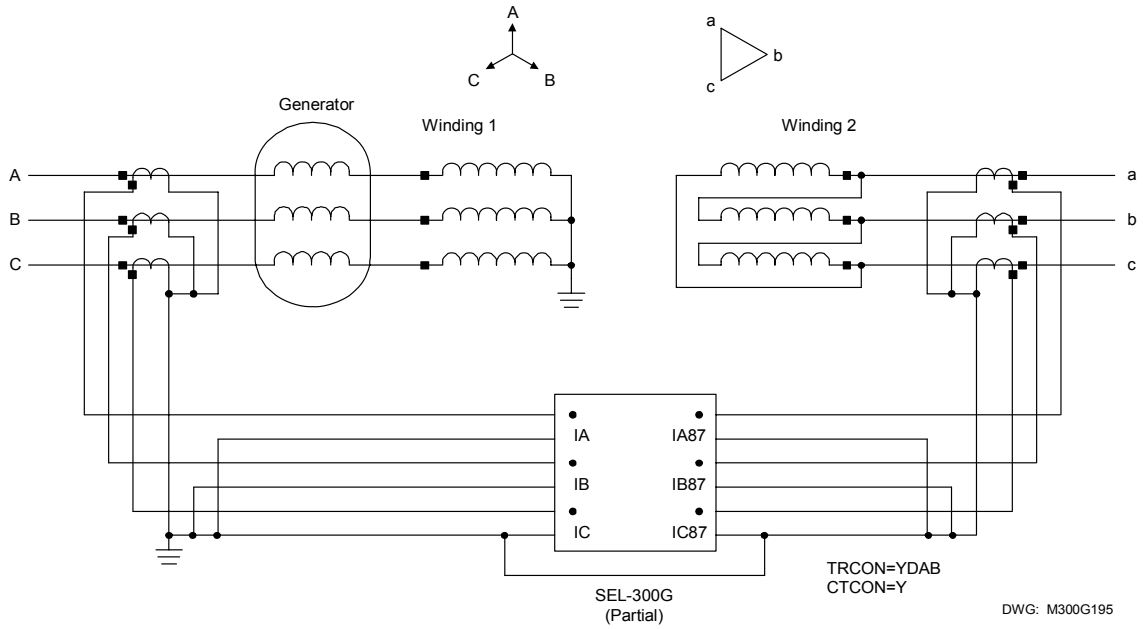

Figure H.9: Wye-Delta Power Transformer With Wye High-Side Connections

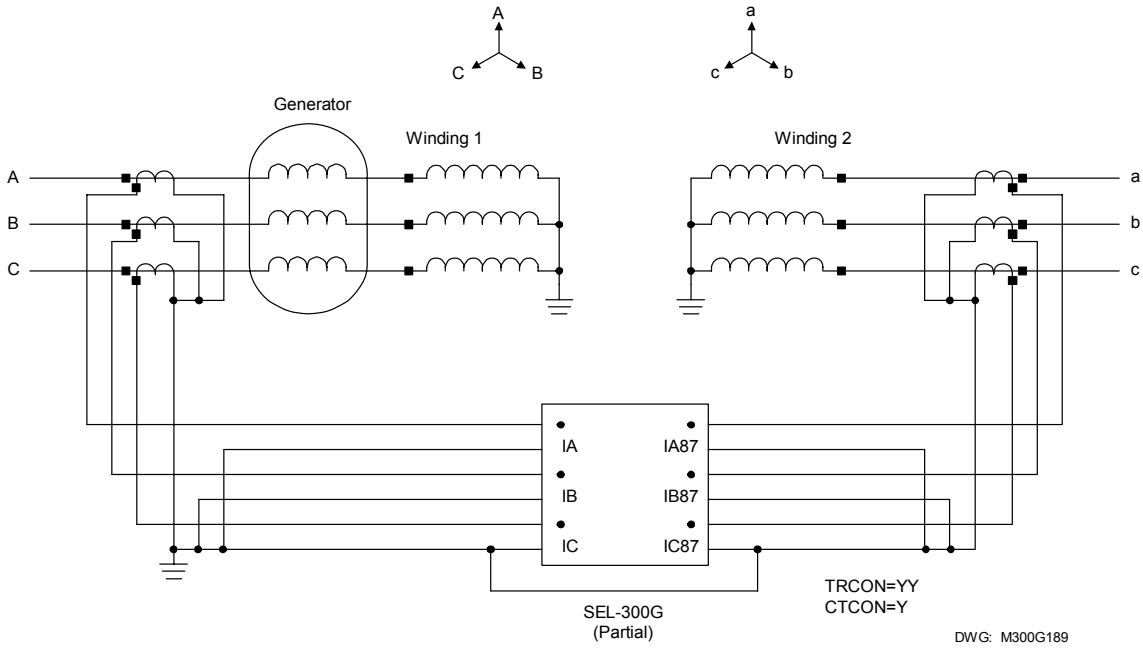

Figure H.10: Wye-Wye Power Transformer With Wye High-Side CT Connections

APPENDIX I: UNSOLICITED FAST SER PROTOCOL

INTRODUCTION

This appendix describes special binary Fast Sequential Events Recorder (SER) messages that are not included in ***Section 10: Serial Port Communications and Commands***. Devices with embedded processing capability can use these messages to enable and accept unsolicited binary Fast SER messages from the SEL-300G Relay.

SEL relays and communications processors have two separate data streams that share the same serial port. The normal serial interface consists of ASCII character commands and reports that are intelligible using a terminal or terminal emulation package. The binary data streams can interrupt the ASCII data stream to obtain information, and then allow the ASCII data stream to continue. This mechanism allows a single communications channel to be used for ASCII communications (e.g., transmission of a long event report) interleaved with short bursts of binary data to support fast acquisition of metering or SER data. To exploit this feature, the device connected to the other end of the link requires software that uses the separate data streams. The binary commands and ASCII commands can also be accessed by a device that does not interleave the data streams.

MAKE SEQUENTIAL EVENTS RECORDER (SER) SETTINGS WITH CARE

The relay triggers a row in the Sequential Events Recorder (SER) event report for any change of state in any one of the elements listed in the SER1, SER2, SER3, or SER4 trigger settings. Nonvolatile memory is used to store the latest 512 rows of the SER event report so they can be retained during power loss. The nonvolatile memory is rated for a finite number of writes. Exceeding the limit can result in an EEPROM self-test failure. **An average of one state change every three minutes can be made for a 25-year relay service life.**

RECOMMENDED MESSAGE USAGE

Use the following sequence of commands to enable unsolicited binary Fast SER messaging in the SEL-300G:

1. On initial connection, send the **SNS** command to retrieve and store the ASCII names for the digital I/O points assigned to trigger SER records.

   The order of the ASCII names matches the point indices in the unsolicited binary Fast SER messages. Send the “Enable Unsolicited Fast SER Data Transfer” message to enable the SEL-300G to transmit unsolicited binary Fast SER messages.

2. When SER records are triggered in the SEL-300G, the relay responds with an unsolicited binary Fast SER message. If this message has a valid checksum, it must be acknowledged by sending an acknowledge message with the same response number as contained in the original message. The relay will wait approximately 100 ms to 500 ms to receive an acknowledge message, at which time the relay will resend the same unsolicited Fast SER message with the same response number.

3. Upon receiving an acknowledge message with a matching response number, the relay increments the response number, and continues to send and seek acknowledgment for

unsolicited Fast SER messages, if additional SER records are available. When the response number reaches three it wraps around to zero on the next increment.

FUNCTIONS AND FUNCTION CODES

In the messages shown below, all numbers are in hexadecimal, unless otherwise noted.

01—Function Code: Enable Unsolicited Fast SER Data Transfer, Sent From Master to Relay

Upon power-up, the SEL-300G disables its own unsolicited transmissions. This function enables the SEL-300G to begin sending unsolicited data to the device that sent the enable message, if the SEL-300G has such data to transfer. The message format for function code 01 is shown in Table I.1.

Table I.1: Function Code 01 Message Format

Data	Description
A546	Message header
12	Message length in bytes (18 decimal)
0000000000	Five bytes reserved for future use as a routing address
YY	Status byte (LSB = 1 indicates an acknowledge is requested)
01	Function code
C0	Sequence byte (Always C0. Other values are reserved for future use in multiple frame messages.)
XX	Response number (XX = 00, 01, 02, 03, 00, 01...).
18	Function to enable (18—unsolicited SER messages)
0000	Reserved for future use as function code data
nn	Maximum number of SER records per message, 01–20 hex
cccc	Two byte CRC-16 check code for message

The SEL-300G verifies the message by checking the header, length, function code, and enabled function code against the expected values. It also checks the entire message against the CRC-16 field. If any of the checks fail, except the function code or the function to enable, the message is ignored.

If an acknowledge is requested as indicated by the least significant bit of the status byte, the relay transmits an acknowledge message with the same response number received in the enable message.

The “nn” field is used to set the maximum number of SER records per message. The relay checks for SER records approximately every 500 ms. If there are new records available, the relay immediately creates a new unsolicited Fast SER message and transmits it. If there are more than “nn” new records available, or if the first and last record are separated by more than 16 seconds, the relay will break the transmission into multiple messages so that no message contains more than “nn” records, and the first and last record of each message are separated by no more than 16 seconds.

If the function to enable is not 18 or the function code is not recognized, the relay responds with an acknowledge message containing a response code 01 (function code unrecognized), and no functions are enabled. If the SER triggers are disabled (SER1, SER2, SER3, or SER4 are all set to NA), the unsolicited Fast SER messages are still enabled, but the only SER records generated are due to settings changes and power being applied to the relay. If the SER1, SER2, SER3, or SER4 settings are subsequently changed to any non-NA value and SER entries are triggered, unsolicited SER messages will be generated with the new SER records.

02—Function Code: Disable Unsolicited Fast SER Data Transfer, Sent From Master to Relay

This function disables the SEL-300G from transferring unsolicited data. The message format for function code 02 is shown in Table I.2.

Table I.2: Function Code 02 Message Format

Data	Description
A546	Message header
10	Message length (16 decimal)
0000000000	Five bytes reserved for future use as a routing address.
YY	Status byte (LSB = 1 indicates an acknowledge is requested)
02	Function code
C0	Sequence byte (Always C0. Other values are reserved for future use in multiple frame messages.)
XX	Response number (XX = 00, 01, 02, 03, 01, 02...)
18	Function to disable (18 = Unsolicited SER)
00	Reserved for future use as function code data
cccc	Two byte CRC-16 check code for message

The SEL-300G verifies the message by checking the header, length, function code, and disabled function code against the expected values, and checks the entire message against the CRC-16 field. If any of the checks fail, except the function code or the function to disable, the message is ignored.

If an acknowledge is requested as indicated by the least significant bit of the status byte, the relay transmits an acknowledge message with the same response number received in the enable message.

If the function to disable is not 18 or the function code is not recognized, the relay responds with an acknowledge message containing the response code 01 (function code unrecognized) and no functions are disabled.

18—Function: Unsolicited Fast SER Response, Sent From Relay to Master

The function 18 is used for the transmission of unsolicited Fast Sequential Events Recorder (SER) data from the SEL-300G. This function code is also passed as data in the “Enable Unsolicited Data Transfer” and the “Disable Unsolicited Data Transfer” messages to indicate which type of unsolicited data should be enabled or disabled. The message format for function code 18 is shown in Table I.3.

Table I.3: Function Code 18 Message Format

Data	Description
A546	Message header
ZZ	Message length (Up to 34 + 4 • *nn* decimal, where *nn* is the maximum number of SER records allowed per message as indicated in the "Enable Unsolicited Data Transfer" message.)
0000000000	Five bytes reserved for future use as a routing address.
YY	Status Byte (01 = need acknowledgment; 03 = settings changed and need acknowledgment. If YY=03, the master should re-read the SNS data because the element index list may have changed.)
18	Function code
C0	Sequence byte (Always C0. Other values are reserved for future use in multiple frame messages.)
XX	Response number (XX = 00, 01, 02, 03, 01, 02...)
00000000	Four bytes reserved for future use as a return routing address.
dddd	Two-byte day of year (1–366)
yyyy	Two-byte, four-digit year (e.g., 1999 or 07CF hex)
mmmmmmmm	Four-byte time of day in milliseconds since midnight
XX	1st element index (match with the response to the SNS command; 00 for 1st element, 01 for second element, and so on)
uuuuuu	Three-byte time tag offset of 1st element in microseconds since time indicated in the time of day field.
XX	2nd element index
uuuuuu	Three-byte time tag offset of 2nd element in microseconds since time indicated in the time of day field.
.	
.	
.	
xx	last element index
uuuuuu	Three-byte time tag offset of last element in microseconds since time indicated in the time of day field.
FFFFFFFE	Four-byte end-of-records flag
ssssssss	Packed four-byte element status for up to 32 elements (LSB for the 1st element)
cccc	Two-byte CRC-16 checkcode for message

If the relay determines that SER records have been lost, it sends a message with the following format.

Table I.4: Message Format for Lost SER Records

Data	Description
A546	Message header
22	Message length (34 decimal)
0000000000	Five bytes reserved for future use as a routing address.
YY	Status Byte (01 = need acknowledgment; 03 = settings changed and need acknowledgment)
18	Function code
C0	Sequence byte (Always C0. Other values are reserved for future use in multiple frame messages.)
XX	Response number (XX = 00, 01, 02, 03, 00, 01, ...)
00000000	Four bytes reserved for future use as a return routing address.
dddd	Two-byte day of year (1–366) of overflow message generation
yyyy	Two-byte, four-digit year (e.g., 1999 or 07CF hex) of overflow message generation.
mmmmmmmm	Four-byte time of day in milliseconds since midnight
FFFFFFFE	Four-byte end-of-records flag
00000000	Element status (unused)
cccc	Two byte CRC-16 checkcode for message

Acknowledge Message Sent From Master to Relay, and From Relay to Master

The acknowledge message is constructed and transmitted for every received message that contains a status byte with the LSB set (except another acknowledge message), and that passes all other checks, including the CRC. The acknowledge message format is shown in Table I.5.

Table I.5: Acknowledge Message Format

Data	Description
A546	Message header
0E	Message length (14 decimal)
0000000000	Five bytes reserved for future use as a routing address.
00	Status byte (always 00)
XX	Function code, echo of acknowledged function code with MSB set.
RR	Response code (see below)
XX	Response number (XX = 00, 01, 02, 03, 00, 01, ...) must match response number from message being acknowledged.)
cccc	Two byte CRC-16 checkcode for message

The SEL-300G supports the response codes in Table I.6

Table I.6: Supported Response Codes

RR	Response
00	Success
01	Function code not recognized

Examples

1 Successful acknowledge for “Enable Unsolicited Fast SER Data Transfer” message from a relay with at least one of SER1, SER2, SER3, or SER4 not set to NA:

A5 46 0E 00 00 00 00 00 00 81 00 XX cc cc
(XX is the same as the Response Number in the “Enable Unsolicited Data Transfer” message to which it responds)

2 Unsuccessful acknowledge for “Enable Unsolicited Fast SER Data Transfer” message from a relay with all of SER1, SER2, SER3, and SER4 set to NA:

A5 46 0E 00 00 00 00 00 00 81 02 XX cc cc
(XX is the same as the response number in the “Enable Unsolicited Data Transfer” message to which it responds.)

3 Disable Unsolicited Fast SER Data Transfer message, acknowledge requested:

A5 46 10 00 00 00 00 00 01 02 C0 XX 18 00 cc cc
(XX = 00, 01, 02, 03)

4 Successful acknowledge from the relay for the “Disable Unsolicited Fast SER Data Transfer” message:

A5 46 0E 00 00 00 00 00 00 82 00 XX cc cc
(XX is the same as the response number in the “Disable Unsolicited Fast SER Data Transfer” message to which it responds.)

5 Successful acknowledge message from the master for an unsolicited Fast SER message:

A5 46 0E 00 00 00 00 00 00 98 00 XX cccc
(XX is the same as the response number in the unsolicited Fast SER message to which it responds.)

Notes:

Once the relay receives an acknowledge with response code 00 from the master, it will clear the settings changed bit (bit 1) in its status byte, if that bit is asserted, and it will clear the settings changed bit in fast meter, if that bit is asserted.

An element index of FE indicates that the SER record is due to power up. An element index of FF indicates that the SER record is due to a setting change. An element index of FD indicates that the element identified in this SER record is no longer in the SER trigger settings.

When the relay sends an SER message packet, it will put a sequential number (00, 01, 02, 03, 00, 01, ...) into the response number. If the relay does not receive an acknowledge from the master before approximately 500 ms, the relay will resend the same message packet with the same response number up to 5 times until it receives an acknowledge message with that response number. For the next SER message, the relay will increment the response number (it will wrap around to zero from three).

A single Fast SER message packet from the relay can have a maximum number of 32 records and the data may span a time period of no more than 16 seconds. The master can limit the number of records in a packet with the third byte of function code data in the “Enable Unsolicited Data Transfer” message (function code 01). The relay can generate an SER packet with fewer than the requested number of records, if the record time stamps span more than 16 seconds.

The relay always requests acknowledgment in unsolicited Fast SER messages (LSB of the status byte is set).

Unsolicited Fast SER messages can be enabled on multiple ports simultaneously.

Table I.5: Acknowledge Message Format

Data	Description
A546	Message header
0E	Message length (14 decimal)
0000000000	Five bytes reserved for future use as a routing address.
00	Status byte (always 00)
XX	Function code, echo of acknowledged function code with MSB set.
RR	Response code (see below)
XX	Response number (XX = 00, 01, 02, 03, 00, 01, ...) must match response number from message being acknowledged.)
cccc	Two byte CRC-16 checkcode for message

The SEL-300G supports the response codes in Table I.6

Table I.6: Supported Response Codes

RR	Response
00	Success
01	Function code not recognized

Examples

1 Successful acknowledge for “Enable Unsolicited Fast SER Data Transfer” message from a relay with at least one of SER1, SER2, SER3, or SER4 not set to NA:

A5 46 0E 00 00 00 00 00 00 81 00 XX cc cc
(XX is the same as the Response Number in the “Enable Unsolicited Data Transfer” message to which it responds)

2 Unsuccessful acknowledge for “Enable Unsolicited Fast SER Data Transfer” message from a relay with all of SER1, SER2, SER3, and SER4 set to NA:

A5 46 0E 00 00 00 00 00 00 81 02 XX cc cc
(XX is the same as the response number in the “Enable Unsolicited Data Transfer” message to which it responds.)

3 Disable Unsolicited Fast SER Data Transfer message, acknowledge requested:

A5 46 10 00 00 00 00 00 01 02 C0 XX 18 00 cc cc
(XX = 00, 01, 02, 03)

4 Successful acknowledge from the relay for the “Disable Unsolicited Fast SER Data Transfer” message:

A5 46 0E 00 00 00 00 00 00 82 00 XX cc cc
(XX is the same as the response number in the “Disable Unsolicited Fast SER Data Transfer” message to which it responds.)

5 Successful acknowledge message from the master for an unsolicited Fast SER message:

A5 46 0E 00 00 00 00 00 00 98 00 XX cccc
(XX is the same as the response number in the unsolicited Fast SER message to which it responds.)

Notes:

Once the relay receives an acknowledge with response code 00 from the master, it will clear the settings changed bit (bit 1) in its status byte, if that bit is asserted, and it will clear the settings changed bit in fast meter, if that bit is asserted.

An element index of FE indicates that the SER record is due to power up. An element index of FF indicates that the SER record is due to a setting change. An element index of FD indicates that the element identified in this SER record is no longer in the SER trigger settings.

When the relay sends an SER message packet, it will put a sequential number (00, 01, 02, 03, 00, 01, ...) into the response number. If the relay does not receive an acknowledge from the master before approximately 500 ms, the relay will resend the same message packet with the same response number up to 5 times until it receives an acknowledge message with that response number. For the next SER message, the relay will increment the response number (it will wrap around to zero from three).

A single Fast SER message packet from the relay can have a maximum number of 32 records and the data may span a time period of no more than 16 seconds. The master can limit the number of records in a packet with the third byte of function code data in the “Enable Unsolicited Data Transfer” message (function code 01). The relay can generate an SER packet with fewer than the requested number of records, if the record time stamps span more than 16 seconds.

The relay always requests acknowledgment in unsolicited Fast SER messages (LSB of the status byte is set).

Unsolicited Fast SER messages can be enabled on multiple ports simultaneously.

SEL-300G Relay Command Summary

Access Level 0 Commands	The only significant thing that can be done at Access level 0 is to go to Access Level 1 or use the **HELP** command. The screen prompt is: =
ACC	Enter Access Level 1. If the main board password jumper is not in place, the relay prompts for the entry of the Access Level 1 password in order to enter Access Level 1.
CAS	Compressed ASCII configuration data.
HELP	Get command help. Use alone to learn commands available at this access level. Use with a command name (such as **HELP DAT**), to get more information about the command.
Access Level 1 Commands	The Access Level 1 commands primarily allow the user to look at information (e.g., settings, metering), not change it. The screen prompt is: =>
2AC	Enter Access Level 2. If the main board password jumper is not in place, the relay prompts for the entry of the Access Level 2 password in order to enter Access Level 2.
BAC	Enter Breaker Access Level (Access Level B). If the main board password jumper is not in place, the relay prompts for the entry of the Access Level B password.
BRE	Display breaker monitor data (trips, interrupted current, wear).
CEV *n*	Show compressed event report number n with 1/4-cycle resolution. You can use parameters Ly, SEC, Sx, R, C, and DIF with CEV similar to **EVE** commands described later. Use **CEV** commands to save event reports for SEL-5601 Analytic Assistant.
CHIS	Show compressed history.
CST	Show compressed status report.
DAT	Show date.
DAT m/d/y	Enter date in this manner if Date Format setting DATE_F = MDY.
DAT y/m/d	Enter date in this manner if Date Format setting DATE_F = YMD.
EVE *n*	Show event report number *n* with 1/4-cycle resolution.
EVE A *n*	Show the analog data for event report number *n*.
EVE C *n*	Show 15-cycle event report number *n* with 1/16-cycle resolution.
EVE D *n*	Show the digital data for event report number *n*.
EVE DIF	Show differential format event report.
EVE GND	Show special report for Stator Ground element 64G. This report shows RMS secondary magnitudes of third-harmonic neutral, third-harmonic terminal, and fundamental neutral voltages with 1/4-cycle resolution. It also includes status of related elements.
EVE L*y* *n*	Show *y* cycles of event report number *n*.
EVE R *n*	Show unfiltered event report number *n*, displaying 16 samples per cycle.
EVE SEC *n*	Show event report number *n* with sampled values in secondary amperes and volts instead of primary amperes and kV.
EVE S*x* *n*	Show event report number *n*, displaying *x* samples per cycle (*x* = 4 or 16).
GRO	Display active group number.

Access Level 1 Commands (continued)	The Access Level 1 commands primarily allow the user to look at information (e.g., settings, metering), not change it. The screen prompt is: =>
HIS *n*	Show a brief summary of the *n* latest event reports.
IRI	Force synchronization attempt of internal relay clock to IRIG-B time-code input.
MET *k*	Display instantaneous metering data. Enter *k* for repeat count.
MET D	Display demand and peak demand data. Select **MET RD** or **MET RP** to reset.
MET DIF	Display differential meter data.
MET E	Display energy metering data. Select **MET RE** to reset.
MET M	Display maximum/minimum metering data. Select **MET RM** to reset.
MET RD	Reset demand ammeter.
MET RE	Reset energy metering.
MET RM	Reset max/min metering.
MET RP	Reset peak demand ammeter.
MET T	Show thermal meter data.
PRO	Display generator operating profile.
QUI	Return to Access Level 0. Terminate Distributed Port Switch Protocol connection.
SER *m n*	Show rows *m* through *n* in the Sequential Events Recorder (SER) event report.
SER *n*	Show the latest *n* rows in the Sequential Events Recorder (SER) event report.
SER d1	Show rows in the Sequential Events Recorder (SER) event report from date d1.
SER d1 d2	Show rows in the Sequential Events Recorder (SER) event report from date d1 to d2. Entry of dates is dependent on the Date Format setting DATE_F (= MDY or YMD).
SHO *n*	Show relay element and logic settings for Group *n*.
SHO G	Show global settings.
SHO P *n*	Show Port *n* settings.
SHO R	Show Sequential Events Recorder (SER) settings.
STA	Show relay self-test status.
SYN *n*	View Synch-Check report *n* (Models 0300G2 and 0300G3)
TAR R	Reset the front-panel tripping targets.
TAR *n k*	Display Relay Word row. If *n* = 0 through 44, display row n. If *n* is an element name (e.g., 50P1) display the row containing element *n*. Enter *k* for repeat count.
TIM	Show or set time (24-hour time). Show time presently in the relay by entering just **TIM**. Example time 22:47:36 is entered with command **TIM 22:47:36**.
TRI	Trigger an event report.

SEL-300G Relay Command Summary

Access Level B Commands	Access Level B commands primarily allow the user to operate relay parameters and output contacts. You can execute all Access Level 1 commands from Access Level B. The screen prompt is: = =>
CLO	Assert the CLOSE Relay Word bit. If CLOSE is assigned to an output contact, the output contact asserts if command **CLO** is executed and the circuit breaker is open.
GRO *n*	Change active group to group *n*.
OPE *n*	Assert the TRIP*n* Relay Word bit. If TRIP*n* is assigned to an output contact (e.g., OUT101 = TRIP1), the output contact asserts if command **OPE 1** is executed.
PUL *n k*	Pulse output contact *n* (ALARM, OUT101–OUT107, OUT201-OUT212) for *k* (1–30) seconds. Parameter *n* must be specified; *k* defaults to 1 if not specified.
Access Level 2 Commands	The Access Level 2 commands allow unlimited access to relay settings, parameters, and output contacts. All Access Level 1 and Access Level B commands are available from Access Level 2. The screen prompt is: =>>
BRE *n*	Enter **BRE W** to preload breaker wear. Enter **BRE R** to reset breaker monitor data.
CON *n*	Control Relay Word bit RB*n* (Remote Bit *n*; *n* = 1 through 8). Execute **CON *n*** and the relay responds: CONTROL RB*n*. Then reply with one of the following: **SRB *n*** set Remote Bit *n* (assert RB*n*). **CRB *n*** clear Remote Bit *n* (deassert RB*n*). **PRB *n*** pulse Remote Bit *n* (assert RB*n* for 1/4 cycle).
COP *m n*	Copy relay and logic settings from group *m* to group *n*.
HIS C	Clear the brief summary and corresponding event reports.
PAS	Show existing Access Level 1, B, and 2 passwords.
PAS 1 xxxxxx	Change Access Level 1 password to xxxxxx.
PAS B xxxxxx	Change Access Level B password to xxxxxx.
PAS 2 xxxxxx	Change Access Level 2 password to xxxxxx.
PRO R	Reset generator operating profile.
SET *n*	Change relay and logic settings for group *n*.
SET G	Change global settings.
SET P *n*	Change Port *n* settings.
SET R	Change Sequential Events Recorder (SER) settings.
STA C	Reset self-test warnings/failures, clear data buffers and restart relay.
SYN R	Reset Synch-Check function breaker close time average.

SEL-300G Relay Command Summary

Access Level 0 Commands	The only significant thing that can be done at Access level 0 is to go to Access Level 1 or use the **HELP** command. The screen prompt is: =
ACC	Enter Access Level 1. If the main board password jumper is not in place, the relay prompts for the entry of the Access Level 1 password in order to enter Access Level 1.
CAS	Compressed ASCII configuration data.
HELP	Get command help. Use alone to learn commands available at this access level. Use with a command name (such as **HELP DAT**), to get more information about the command.
Access Level 1 Commands	The Access Level 1 commands primarily allow the user to look at information (e.g., settings, metering), not change it. The screen prompt is: =>
2AC	Enter Access Level 2. If the main board password jumper is not in place, the relay prompts for the entry of the Access Level 2 password in order to enter Access Level 2.
BAC	Enter Breaker Access Level (Access Level B). If the main board password jumper is not in place, the relay prompts for the entry of the Access Level B password.
BRE	Display breaker monitor data (trips, interrupted current, wear).
CEV *n*	Show compressed event report number n with 1/4-cycle resolution. You can use parameters Ly, SEC, Sx, R, C, and DIF with CEV similar to **EVE** commands described later. Use **CEV** commands to save event reports for SEL-5601 Analytic Assistant.
CHIS	Show compressed history.
CST	Show compressed status report.
DAT	Show date.
DAT m/d/y	Enter date in this manner if Date Format setting DATE_F = MDY.
DAT y/m/d	Enter date in this manner if Date Format setting DATE_F = YMD.
EVE *n*	Show event report number *n* with 1/4-cycle resolution.
EVE A *n*	Show the analog data for event report number *n*.
EVE C *n*	Show 15-cycle event report number *n* with 1/16-cycle resolution.
EVE D *n*	Show the digital data for event report number *n*.
EVE DIF	Show differential format event report.
EVE GND	Show special report for Stator Ground element 64G. This report shows RMS secondary magnitudes of third-harmonic neutral, third-harmonic terminal, and fundamental neutral voltages with 1/4-cycle resolution. It also includes status of related elements.
EVE L*y* *n*	Show *y* cycles of event report number *n*.
EVE R *n*	Show unfiltered event report number *n*, displaying 16 samples per cycle.
EVE SEC *n*	Show event report number *n* with sampled values in secondary amperes and volts instead of primary amperes and kV.
EVE S*x* *n*	Show event report number *n*, displaying *x* samples per cycle (*x* = 4 or 16).
GRO	Display active group number.

Access Level 1 Commands (continued)	The Access Level 1 commands primarily allow the user to look at information (e.g., settings, metering), not change it. The screen prompt is: =>
HIS *n*	Show a brief summary of the *n* latest event reports.
IRI	Force synchronization attempt of internal relay clock to IRIG-B time-code input.
MET *k*	Display instantaneous metering data. Enter *k* for repeat count.
MET D	Display demand and peak demand data. Select **MET RD** or **MET RP** to reset.
MET DIF	Display differential meter data.
MET E	Display energy metering data. Select **MET RE** to reset.
MET M	Display maximum/minimum metering data. Select **MET RM** to reset.
MET RD	Reset demand ammeter.
MET RE	Reset energy metering.
MET RM	Reset max/min metering.
MET RP	Reset peak demand ammeter.
MET T	Show thermal meter data.
PRO	Display generator operating profile.
QUI	Return to Access Level 0. Terminate Distributed Port Switch Protocol connection.
SER *m n*	Show rows *m* through *n* in the Sequential Events Recorder (SER) event report.
SER *n*	Show the latest *n* rows in the Sequential Events Recorder (SER) event report.
SER d1	Show rows in the Sequential Events Recorder (SER) event report from date d1.
SER d1 d2	Show rows in the Sequential Events Recorder (SER) event report from date d1 to d2. Entry of dates is dependent on the Date Format setting DATE_F (= MDY or YMD).
SHO *n*	Show relay element and logic settings for Group *n*.
SHO G	Show global settings.
SHO P *n*	Show Port *n* settings.
SHO R	Show Sequential Events Recorder (SER) settings.
STA	Show relay self-test status.
SYN *n*	View Synch-Check report *n* (Models 0300G2 and 0300G3)
TAR R	Reset the front-panel tripping targets.
TAR *n k*	Display Relay Word row. If *n* = 0 through 44, display row n. If *n* is an element name (e.g., 50P1) display the row containing element *n*. Enter *k* for repeat count.
TIM	Show or set time (24-hour time). Show time presently in the relay by entering just **TIM**. Example time 22:47:36 is entered with command **TIM 22:47:36**.
TRI	Trigger an event report.

SEL-300G Relay Command Summary

Access Level B Commands	Access Level B commands primarily allow the user to operate relay parameters and output contacts. You can execute all Access Level 1 commands from Access Level B. The screen prompt is: = =>
CLO	Assert the CLOSE Relay Word bit. If CLOSE is assigned to an output contact, the output contact asserts if command **CLO** is executed and the circuit breaker is open.
GRO *n*	Change active group to group *n*.
OPE *n*	Assert the TRIP*n* Relay Word bit. If TRIP*n* is assigned to an output contact (e.g., OUT101 = TRIP1), the output contact asserts if command **OPE 1** is executed.
PUL *n k*	Pulse output contact *n* (ALARM, OUT101–OUT107, OUT201-OUT212) for *k* (1–30) seconds. Parameter *n* must be specified; *k* defaults to 1 if not specified.
Access Level 2 Commands	The Access Level 2 commands allow unlimited access to relay settings, parameters, and output contacts. All Access Level 1 and Access Level B commands are available from Access Level 2. The screen prompt is: =>>
BRE *n*	Enter **BRE W** to preload breaker wear. Enter **BRE R** to reset breaker monitor data.
CON *n*	Control Relay Word bit RB*n* (Remote Bit *n*; *n* = 1 through 8). Execute **CON *n*** and the relay responds: CONTROL RB*n*. Then reply with one of the following: **SRB *n*** set Remote Bit *n* (assert RB*n*). **CRB *n*** clear Remote Bit *n* (deassert RB*n*). **PRB *n*** pulse Remote Bit *n* (assert RB*n* for 1/4 cycle).
COP *m n*	Copy relay and logic settings from group *m* to group *n*.
HIS C	Clear the brief summary and corresponding event reports.
PAS	Show existing Access Level 1, B, and 2 passwords.
PAS 1 xxxxxx	Change Access Level 1 password to xxxxxx.
PAS B xxxxxx	Change Access Level B password to xxxxxx.
PAS 2 xxxxxx	Change Access Level 2 password to xxxxxx.
PRO R	Reset generator operating profile.
SET *n*	Change relay and logic settings for group *n*.
SET G	Change global settings.
SET P *n*	Change Port *n* settings.
SET R	Change Sequential Events Recorder (SER) settings.
STA C	Reset self-test warnings/failures, clear data buffers and restart relay.
SYN R	Reset Synch-Check function breaker close time average.