SEL-551C Relay

Overcurrent Relay
Reclosing Relay

Instruction Manual

20080104

SEL® SCHWEITZER ENGINEERING LABORATORIES, INC.

⚠CAUTION

The relay contains devices sensitive to Electrostatic Discharge (ESD). When working on the relay with the front panel removed, work surfaces and personnel must be properly grounded or equipment damage may result.

⚠CAUTION

This procedure requires that you handle components sensitive to Electrostatic Discharge (ESD). If your facility is not equipped to work with these components, we recommend that you return the relay to SEL for firmware installation.

⚠CAUTION

There is danger of explosion if the battery is incorrectly replaced. Replace only with Ray-O-Vac® no. BR2335 or equivalent recommended by manufacturer. Dispose of used batteries according to the manufacturer's instructions.

⚠CAUTION

Verify proper orientation of the new EPROM in the socket before applying pressure to engage it. Note the orientation indication provided by the notched inside socket corner and the notched corner.

⚠CAUTION

Verify proper orientation of the new EPROM in the socket before applying pressure to engage it. Note the orientation indication provided by the notched inside socket corner and the notched corner.

⚠WARNING

This device is shipped with default passwords. Default passwords should be changed to private passwords at installation. Failure to change each default password to a private password may allow unauthorized access. SEL shall not be responsible for any damage resulting from unauthorized access.

⚠WARNING

Operator safety may be impaired if the device is used in a manner not specified by SEL.

⚠DANGER

Contact with instrument terminals can cause electrical shock that can result in injury or death.

⚠DANGER

Contact with this circuitry may cause electrical shock that can result in injury or death. Removal of enclosure panels exposes circuitry which may cause electrical shock which can result in injury or death.

⚠ATTENTION

Le relais contient des pièces sensibles aux décharges électrostatiques. Quand on travaille sur le relais avec les panneaux avant ou du dessus enlevés, toutes les surfaces et le personnel doivent être mis à la terre convenablement pour éviter les dommages à l'équipement.

⚠ATTENTION

Cette procédure requiert que vous manipuliez des composants sensibles aux décharges électrostatiques (DES). Si vous n'êtes pas équipés pour travailler avec ce type de composants, nous vous recommandons de les retourner à SEL pour leur installation.

⚠ATTENTION

Il y a un danger d'explosion si la pile électrique n'est pas correctement remplacée. Utiliser exclusivement Ray-O-Vac® No. BR2335 ou un équivalent recommandé par le fabricant. Se débarrasser des piles usagées suivant les instructions du fabricant.

⚠ATTENTION

Vérifier l'orientation du nouvel EPROM avant d'appliquer la pression pour l'insérer dans sa base. Noter l'orientation indiquée par le coin marqué à l'intérieur de la base et le coin marqué du composant.

⚠CAUTION

Do not connect power to the SEL-551C until you have completed these procedures.

⚠AVERTISSEMENT

Cet appareil est expédié avec des mots de passe par défaut. A l'installation, les mots de passe par défaut devront être changés pour des mots de passe confidentiels. Dans le cas contraire, un accés non-autorisé á l'équipement peut être possible. SEL décline toute responsabilité pour tout dommage résultant de cet accés non-autorisé.

⚠AVERTISSEMENT

La sécurité de l'opérateur peut être compromise si l'appareil est utilisé d'une façon non indiquée par SEL.

⚠DANGER

Tout contact avec les bornes de l'appareil peut causer un choc électrique pouvant entraîner des blessuers ou la mort.

⚠DANGER

Tout contact avec ce circuit peut être la cause d'un choc électrique pouvant entraîner des blessures ou la mort. Le retrait des panneaux du boîtier expose le circuit qui peut causer des chocos électriques pouvant entraîner des blessures ou la mort.

© 1998–2008 by Schweitzer Engineering Laboratories, Inc. All rights reserved.

All brand or product names appearing in this document are the trademark or registered trademark of their respective holders. No SEL trademarks may be used without written permission. SEL products appearing in this document may be covered by US and Foreign patents.

Schweitzer Engineering Laboratories, Inc. reserves all rights and benefits afforded under federal and international copyright and patent laws in its products, including without limitation software, firmware, and documentation.

The information in this manual is provided for informational use only and is subject to change without notice. Schweitzer Engineering Laboratories, Inc. has approved only the English language manual.

This product is covered by the standard SEL 10-year warranty. For warranty details, visit www.selinc.com or contact your customer service representative.

PM551C-01

Table of Contents

List of Tables v

List of Figures vii

Preface ix

Section 1: Introduction and Specifications

Overview 1.1
SEL-551C Applications 1.3
Hardware Overview 1.4
Specifications 1.5
Overcurrent Elements 1.7
CT Saturation Protection 1.9
Timer Specifications 1.10

Section 2: Installation

Overview 2.1
Relay Mounting 2.2
Rear-Panel Connections 2.7
SEL-551C AC/DC Connection Diagrams for Example Applications 2.9
EIA-485 Rear-Panel Adapter 2.15
Circuit Board Jumpers and Battery 2.16
EN 61010-1 and the SEL-551C 2.18

Section 3: Relay Elements and Logic

Relay Word Bits and SELOGIC Control Equations 3.1
Optoisolated Inputs 3.4
Local Control Switches 3.6
Remote Control Switches 3.9
Instantaneous Overcurrent Elements 3.10
Time-Overcurrent Elements 3.14
Trip Logic 3.19
Close Logic 3.22
Reclosing Relay 3.25
SELOGIC Control Equation Variables/Timers 3.41
Output Contacts 3.43
Demand Ammetering 3.45
Latch Control Switches 3.50
Front-Panel Target LEDs 3.56

Section 4: Setting the Relay

Overview 4.1
Settings Changes Via the Front Panel 4.2
Settings Changes Via the Serial Port 4.3
Time-Overcurrent Element Setting Reference Information 4.4
Relay Word Bit Setting Reference Information 4.16
Settings Explanations 4.21
Settings Sheets 4.24

Settings Sheets for the SEL-551C Relay

Section 5: Serial Port Communications and Commands

Overview 5.1
Port Connector and Communications Cables 5.2
Communications Protocol 5.5

Serial Port Automatic Messages 5.9
Serial Port Access Levels 5.10
Command Summary 5.12
Command Explanations 5.14

SEL-551C Command Summary

Section 6: Front-Panel Interface

Overview 6.1
Front-Panel Pushbutton Operation 6.2
Functions Unique to the Front-Panel Interface 6.6
Rotating Default Display 6.12

Section 7: Standard Event Reports and SER

Overview 7.1
Standard 15-Cycle Event Reports 7.2
Sequential Events Recorder (SER) Event Report 7.10
Example Standard 15-Cycle Event Report 7.13
Example Sequential Events Recorder (SER) Event Report 7.20

Section 8: Testing and Troubleshooting

Overview 8.1
Testing Methods and Tools 8.2
Acceptance Testing 8.5
Commissioning Testing 8.16
Maintenance Testing 8.17
Relay Self-Tests 8.18
Relay Troubleshooting 8.20
Relay Calibration 8.21
Factory Assistance 8.22

Appendix A: Firmware and Manual Versions

Firmware A.1
Instruction Manual A.3

Appendix B: Firmware Upgrade Instructions

Flash Firmware Upgrades B.1

Appendix C: SEL Distributed Port Switch Protocol

Overview C.1
Settings C.2
Operation C.3

Appendix D: Configuration, Fast Meter, and Fast Operate Commands

Overview D.1
Message Lists D.2
Message Definitions D.3

Appendix E: Compressed ASCII Commands

Overview E.1
CASCII Command—General Format E.2
CASCII Command—SEL-551C E.4
CSTATUS Command—SEL-551C E.5
CHISTORY Command—SEL-551C E.6
CEVENT Command—SEL-551C E.7

Appendix F: Setting Negative-Sequence Overcurrent Elements

Setting Negative-Sequence Definite-Time Overcurrent Elements F.1
Setting Negative-Sequence Time-Overcurrent Elements F.2

Coordinating Negative-Sequence Overcurrent Elements F.3
Other Negative-Sequence Overcurrent Element References F.8

Appendix G: Modbus RTU Communications Protocol

Overview G.1
Modbus RTU Communications Protocol G.2

This page intentionally left blank

List of Tables

Table 1.1 Overcurrent Elements 1.7
Table 3.1 Processing Order of SELOGIC Control Equation Operators 3.1
Table 3.2 Processing Order of Relay Elements and Logic (Top to Bottom) 3.3
Table 3.3 Correspondence Between Local Control Switch Positions and Label Settings 3.6
Table 3.4 Correspondence Between Local Control Switch Types and Required Label Settings 3.7
Table 3.5 Relay Word Bit and Front-Panel Correspondence to Reclosing Relay States 3.25
Table 3.6 Shot Counter Correspondence to Relay Word Bits and Open Interval Times 3.29
Table 3.7 Demand Ammeter Settings and Settings Range 3.46
Table 3.8 SEL-551C Front-Panel Target LED Definitions 3.56
Table 4.1 Serial Port SET Commands 4.1
Table 4.2 SET Command Editing Keystrokes 4.3
Table 4.3 Equations Associated With U.S. Curves 4.4
Table 4.4 Equations Associated With IEC Curves 4.4
Table 4.5 SEL-551C Relay Word Bits 4.16
Table 4.6 Relay Word Bit Definitions 4.16
Table 5.1 Serial Communications Port Pin Function Definitions 5.4
Table 5.2 Communications Settings 5.7
Table 5.3 Serial Port Automatic Messages 5.9
Table 5.4 Serial Port Command Summary 5.12
Table 5.5 ACC and 2AC Commands 5.14
Table 5.6 SEL-551C Relay Word and Its Correspondence to TAR Command and Front-Panel LEDs 5.24
Table 5.7 SEL-551C Control Subcommands 5.26
Table 5.8 Valid Password Characters 5.27
Table 7.1 Event Types 7.4
Table 7.2 Standard Event Report Current Columns 7.5
Table 7.3 Other Standard Event Report Columns 7.6
Table 7.4 SEL-551C Input/Output Event Report Columns 7.9
Table 7.5 SER Report Row Commands and Format 7.11
Table 8.1 Instantaneous Overcurrent Elements and Corresponding Settings/Relay Word Bits/TAR Commands 8.11
Table 8.2 Inverse-Time Overcurrent Elements and Corresponding Settings/Relay Word Bits/TAR Commands 8.13
Table 8.3 Relay Self Tests 8.18
Table 8.4 Troubleshooting Procedures 8.20
Table A.1 Firmware Revision History A.1
Table A.2 Instruction Manual Revision History A.3
Table D.1 Binary Message List D.2
Table D.2 ASCII Configuration Message List D.2
Table D.3 A5C0 Relay Definition Block D.3
Table D.4 A5C1 Fast Meter Configuration Block D.3
Table D.5 A5D1 Fast Meter Data Block D.4
Table D.6 A5C2/A5C3 Demand/Peak Demand Fast Meter Configuration Messages D.5
Table D.7 A5D2/A5D3 Demand/Peak Demand Fast Meter Message D.6
Table D.8 A5CE Fast Operate Configuration Block D.6
Table D.9 A5E0 Fast Operate Remote Bit Control D.7
Table D.10 A5E3 Fast Operate Breaker Control D.8
Table E.1 Mapping Labels to Bits E.8
Table G.1 Modbus Query Fields G.2
Table G.2 SEL-551C Modbus Function Codes G.2
Table G.3 SEL-551C Modbus Exception Codes G.3
Table G.4 01h Read Coil Status Commands G.3
Table G.5 02h Read Input Status Command G.4
Table G.6 03h Read Holding Register Command G.5

Table G.7 04h Read Holding Register Command G.6
Table G.8 05h Force Single Coil Command G.7
Table G.9 SEL-551C Command Coils G.7
Table G.10 06h Preset Single Register Command G.8
Table G.11 07h Read Exception Status Command G.8
Table G.12 08h Loopback Diagnostic Command G.9
Table G.13 10h Preset Multiple Registers Command G.10
Table G.14 64h Scattered Register Read Command G.11
Table G.15 SEL-551C Modbus Command Region G.12
Table G.16 Modbus Command Codes G.12
Table G.17 Assign Event Report Channel Using Address 00B2 ..... G.13
Table G.18 Modbus Map G.14

List of Figures

Figure 1.1 SEL-551C Relays Applied Throughout the Power System 1.3
Figure 1.2 SEL-551C Inputs, Outputs, and Communications Port 1.4
Figure 1.4 SEL-551C Instantaneous Overcurrent Element Pickup Time Curve 1.8
Figure 1.5 SEL-551C Relay Instantaneous Overcurrent Element Reset Time Curve 1.8
Figure 2.1 SEL-551C Dimensions, Panel Cutout, and Drill Plan 2.3
Figure 2.2 Relay Dimensions and Drill Plan for Mounting Two SEL-500 Series Relays Together Using Mounting Block (SEL P/N 9101) 2.4
Figure 2.3 Relay Dimensions and Drill Plan for Mounting an SEL-551C With Rack Mount Bracket 9100 (Bracket on Right Side in Front View) 2.5
Figure 2.4 SEL-551C Fitted with Mounting Bracket (SEL P/N 9100) for Mounting in 19-Inch Rack .. 2.5
Figure 2.5 SEL-551C Front Panel With Optional EIA-232 Serial Communications Port, Rack-Mount Version (Half-Rack Width) 2.6
Figure 2.6 SEL-551C Front Panel, Panel-Mount Version 2.6
Figure 2.7 SEL-551C Rear Panel 2.7
Figure 2.8 SEL-551C Provides Overcurrent Protection and Reclosing for a Utility Distribution Feeder (Includes OUT3 = !SALARM + HALARM) 2.9
Figure 2.9 SEL-551C Provides Overcurrent Protection for an Industrial Distribution Feeder (Core-Balance Current Transformer Connected to Current Input Channel IN) 2.10
Figure 2.10 SEL-551C Provides Overcurrent Protection for a Delta-Wye Transformer Bank 2.11
Figure 2.11 SEL-551C Provides Overcurrent Protection for a Transformer Bank with a Tertiary Winding 2.12
Figure 2.12 SEL-551C Provides Overcurrent Protection for a Distribution Bus (Includes Fast Bus Trip Scheme) 2.13
Figure 2.13 SEL-551C Provides Dedicated Breaker Failure Protection 2.14
Figure 2.14 Output Jumper Locations 2.16
Figure 2.15 Rear-Panel Safety Symbols 2.18
Figure 3.1 Example Operation of SEL-551C Optoisolated Inputs 3.4
Figure 3.2 Local Control Switches Drive Local Bits LB1–LB8 ..... 3.6
Figure 3.3 Remote Control Switches Drive Remote Bits RB1–RB8 ..... 3.9
Figure 3.4 Phase Instantaneous Overcurrent Elements 50P1–50P6 ..... 3.10
Figure 3.5 Single-Phase Instantaneous Overcurrent Elements 50A, 50B, and 50C 3.11
Figure 3.6 Neutral Ground Instantaneous Overcurrent Elements 50N1 and 50N2 ..... 3.12
Figure 3.7 Residual Ground Instantaneous Overcurrent Elements 50G1 and 50G2 ..... 3.12
Figure 3.8 Negative-Sequence Instantaneous Overcurrent Elements 50Q1 and 50Q2 ..... 3.13
Figure 3.9 Phase Time-Overcurrent Elements 51P1T and 51P2T 3.14
Figure 3.10 Neutral Ground Time-Overcurrent Element 51N1T 3.17
Figure 3.11 Residual Ground Time-Overcurrent Element 51G1T 3.17
Figure 3.12 Negative-Sequence Time-Overcurrent Elements 51Q1T and 51Q2T 3.18
Figure 3.13 Trip Logic 3.19
Figure 3.14 Close Logic 3.22
Figure 3.15 Reclosing Relay States and General Operation 3.25
Figure 3.16 Reclosing Sequence From Reset to Lockout With Factory Settings 3.28
Figure 3.17 Voltage Relay (27/59) Provides Reclose Block Signal to SEL-551C 3.35
Figure 3.18 Sequence Coordination Between the SEL-551C and a Line Recloser 3.38
Figure 3.19 Operation of SEL-551C Shot Counter for Sequence Coordination With Line Recloser (Additional Settings Example 1) 3.38
Figure 3.20 Operation of SEL-351 Relay Shot Counter for Sequence Coordination With Line Recloser (Additional Setting Example 2) 3.40
Figure 3.21 SELOGIC Control Equation Variables/Timers 3.41
Figure 3.22 Dedicated Breaker Failure Scheme Created With SELOGIC Variables/Timers 3.42
Figure 3.23 Logic Flow for Example SEL-551C Output Contact Operation 3.43
Figure 3.24 Response of Thermal Demand Ammeter to a Step Input (Setting DMTC = 15 minutes) ... 3.45
Figure 3.25 Voltage V_S Applied to Series RC Circuit 3.46
Figure 3.26 Demand Current Logic Outputs 3.47
Figure 3.27 Raise Pickup of Residual Ground Time-Overcurrent Element for Unbalance Current 3.48
Figure 3.28 Traditional Latching Relay 3.50
Figure 3.29 Latch Control Switches Drive Latch Bits LT1–LT8 ..... 3.50
Figure 3.30 SCADA Contact Pulses Input IN4 to Enable/Disable Reclosing Relay 3.51

Figure 3.31 Latch Control Switch Controlled by a Single Input to Enable/Disable Reclosing 3.51
Figure 3.32 Latch Control Switch Operation Time Line 3.53
Figure 3.33 Latch Control Switch (With Time Delay Feedback) Controlled by a Single Input to Enable/Disable Reclosing 3.54
Figure 3.34 Latch Control Switch (With Time Delay Feedback) Operation Time Line 3.55
Figure 3.35 Seal-In of Breaker Failure Occurrence for Message Display 3.57
Figure 4.1 U.S. Moderately Inverse Curve: U1 ..... 4.6
Figure 4.2 U.S. Inverse Curve: U2 ..... 4.7
Figure 4.3 U.S. Very Inverse Curve: U3 ..... 4.8
Figure 4.4 U.S. Extremely Inverse Curve: U4 ..... 4.9
Figure 4.5 U.S. Short-Time Inverse Curve: U5 ..... 4.10
Figure 4.6 I.E.C. Class A Curve (Standard Inverse): C1 ..... 4.11
Figure 4.7 I.E.C. Class B Curve (Very Inverse): C2 ..... 4.12
Figure 4.8 I.E.C. Class C Curve (Extremely Inverse): C3 ..... 4.13
Figure 4.9 I.E.C. Long-Time Inverse Curve: C4 ..... 4.14
Figure 4.10 I.E.C. Short-Time Inverse Curve: C5 ..... 4.15
Figure 5.1 Nine-Pin Serial Communications Port Connector 5.2
Figure 6.1 SEL-551C Front-Panel Pushbuttons—Overview 6.2
Figure 6.2 SEL-551C Front-Panel Pushbuttons—Primary Functions 6.3
Figure 6.3 SEL-551C Front-Panel Pushbuttons-Primary Functions (continued) 6.4
Figure 6.4 SEL-551C Front-Panel Pushbuttons-Secondary Functions 6.5
Figure 6.5 Local Control Switch Configured as an ON/OFF Switch 6.8
Figure 6.6 Local Control Switch Configured as an OFF/MOMENTARY Switch 6.8
Figure 6.7 Local Control Switch Configured as an ON/OFF/MOMENTARY Switch 6.8
Figure 7.1 Example Event Summary 7.4
Figure 7.2 Example SEL-551C Standard 15-Cycle Event Report (1/8-Cycle Resolution) 7.16
Figure 7.3 Derivation of Event Report Current Values and RMS Current Values From Sampled Current Waveform 7.17
Figure 7.4 Derivation of Phasor RMS Current Values From Event Report Current Values 7.18
Figure 7.5 Example Sequential Events Recorder (SER) Event Report 7.20
Figure 8.1 Low-Level Test Interface 8.3
Figure 8.2 Relay Part Number and Hardware Identification Sticker 8.6
Figure 8.3 Test Connections for Balanced Load With Three-Phase Current Sources 8.10
Figure 8.4 Test Connections for Balanced Load With Two-Phase Current Sources 8.10
Figure F.1 Minimum Response Time Added to a Negative-Sequence Time-Overcurrent Element F.2
Figure F.2 Distribution Feeder Protective Devices F.4
Figure F.3 Traditional Phase Coordination F.4
Figure F.4 Phase-to-Phase Fault Coordination F.5
Figure F.5 Negative-Sequence Overcurrent Element Derived From “Equivalent” Phase Overcurrent Element, 51EP F.6

Preface

Manual Overview

The SEL-551C Relay Instruction Manual describes common aspects of relay application and use. It includes the necessary information to install, set, test, and operate the relay and more detailed information about settings and commands.

An overview of each manual section and topics follows:

Preface. Describes the manual organization and conventions used to present information.

Section 1: Introduction and Specifications. Describes the basic features and functions of the SEL-551C; lists the relay specifications.

Section 2: Installation. Describes how to mount and wire the SEL-551C; illustrates wiring connections for various applications.

Section 3: Relay Elements and Logic. Describes operating characteristics of elements through the use of logic diagrams and text and explains how to calculate their settings; describes contact output logic.

Section 4: Setting the Relay. Describes how to enter and record settings.

Section 5: Serial Port Communications and Commands. Describes how to connect the SEL-551C to a PC for communication; shows serial port pinouts; lists and defines serial port commands.

Section 6: Front-Panel Interface. Explains the features and use of the front panel, including front-panel command menu, default displays, and automatic messages.

Section 7: Standard Event Reports and SER. Describes event summary data, standard event reports, and Sequential Events Recorder (SER) report.

Section 8: Testing and Troubleshooting. Describes protection element test procedures, relay self-test, and relay troubleshooting.

Section 9: Appendices. Contains the following appendices:

- Appendix A: Firmware and Manual Versions
- Appendix B: Firmware Upgrade Instructions
- Appendix C: SEL Distributed Port Switch Protocol
- Appendix D: Configuration, Fast Meter, and Fast Operate Commands
- Appendix E: Compressed ASCII Commands
- Appendix F: Setting Negative-Sequence Overcurrent Elements
- Appendix G: Modbus RTU Communications Protocol

SEL-551C Command Summary. Briefly describes the serial port commands that are fully described in *Section 5: Serial Port Communications and Commands*.

Conventions

Typographic Conventions

There are three ways to communicate with the SEL-551C:

- Using a command line interface on a PC terminal emulation window.
- Using the front-panel menus and pushbuttons.
- Using ACSELERATOR® QuickSet™ SEL-5030 Software

The instructions in this manual indicate these options with specific font and formatting attributes. The following table lists these conventions:

Typographic Conventions

Example	Description
STATUS	Commands typed at a command line interface on a PC.
<Enter>	Single keystroke on a PC keyboard.
<Ctrl+D>	Multiple/combination keystroke on a PC keyboard.
Start > Settings	PC software dialog boxes and menu selections. The > character indicates submenus.
{CLOSE}	Relay front-panel pushbuttons.
ENABLE	Relay front- or rear-panel labels.
MAIN > METER	Relay front-panel LCD menus and relay responses visible on the PC screen. The > character indicates submenus.

Examples

This instruction manual uses several example illustrations and instructions to explain how to effectively operate the SEL-551C. These examples are for demonstration purposes only; the firmware identification information or settings values included in these examples may not necessarily match those in the current version of your SEL-551C.

Safety Information

This manual uses three kinds of hazard statements, formatted as follows:

⚠CAUTION
Indicates a potentially hazardous situation that, if not avoided, may result in minor or moderate injury or equipment damage.

⚠WARNING
Indicates a potentially hazardous situation that, if not avoided, **could** result in death or serious injury.

⚠DANGER
Indicates an imminently hazardous situation that, if not avoided, **will** result in death or serious injury.

Section 1

Introduction and Specifications

Overview

The SEL-551C Overcurrent Relay and Reclosing Relay provides overcurrent protection and up to four shots of reclosing in one compact package. The relay measures phase and neutral currents—no voltages.

SEL-551C Feature Highlights

- Numerous Phase, Ground, and Negative-Sequence Overcurrent Elements
- Multiple-Shot Reclosing Relay with Sequence Coordination
- Enhanced SELOGIC® Control Equations to Create Traditional or Advanced Schemes
- Local/Remote Control Logic to Enable/Disable Schemes, Operate Circuit Breakers, etc.
- Sequential Events Recorder (SER) Report and Event Reports Stored in Nonvolatile Memory
- Hardware Options for Rear-Panel Terminals, Output Contacts, and Serial Communications Port
- Demand Ammetering

Use the SEL-551C for Overcurrent Protection in New Installations and Retrofits

- Utility Distribution Feeders—includes reclosing
- Industrial Distribution Feeders—includes connections for a core-balance current transformer
- Distribution Buses—includes fast bus trip scheme
- Transformer Banks—includes connections for a separate neutral current transformer
- Other Power System Apparatus—capacitors, reactors, circuit breakers, etc.

Differences Between the SEL-551/SEL-551C Relays

The SEL-551C Relay differs from the SEL-551 Relay in the following major areas:

- Different I/O mix.

SEL-551	SEL-551C
5 output contacts (OUT1–OUT4, ALARM)	3 output contacts (OUT1–OUT3)
2 input contacts (IN1, IN2)	6 input contacts (IN1–IN6)

- Relay Word bit differences because of I/O mix and addition of programmable alarm conditions SALARM and HALARM.
- Latch Control Switches to Replace Traditional Latching Relays.
- Optional front-panel EIA-232 serial communications port (see *Figure 2.5*)
- Available with conventional terminal blocks and level-sensitive optoisolated inputs (see *Specifications*, *General on page 1.5* for optoisolated inputs ratings).

SEL-551C Applications

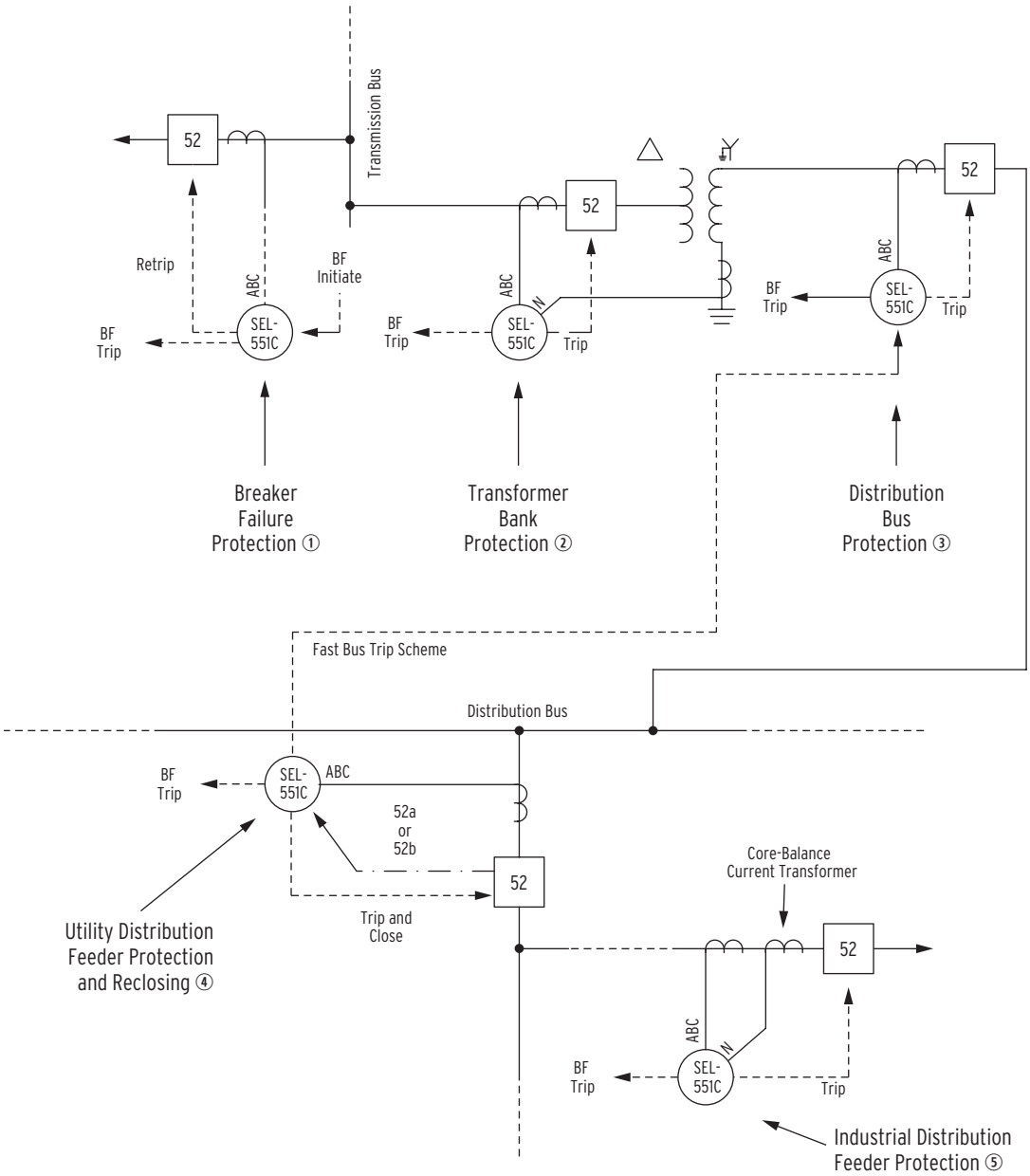

① See Figure 2.13; ② see Figure 2.10; ③ see Figure 2.12; ④ see Figure 2.8; ⑤ see Figure 2.9.

Figure 1.1 SEL-551C Relays Applied Throughout the Power System

Hardware Overview

- Rear-panel: conventional terminal blocks and level-sensitive optoisolated inputs (see *Specifications*, *General on page 1.5* for optoisolated inputs ratings; see *Figure 2.7*)
- Rear-panel serial communications port: EIA-232 or EIA-485 (4-wire)-either option includes a demodulated IRIG-B time-code input (see *Figure 2.7*)
- Optional front-panel EIA-232 serial communications port (see *Figure 2.5*)

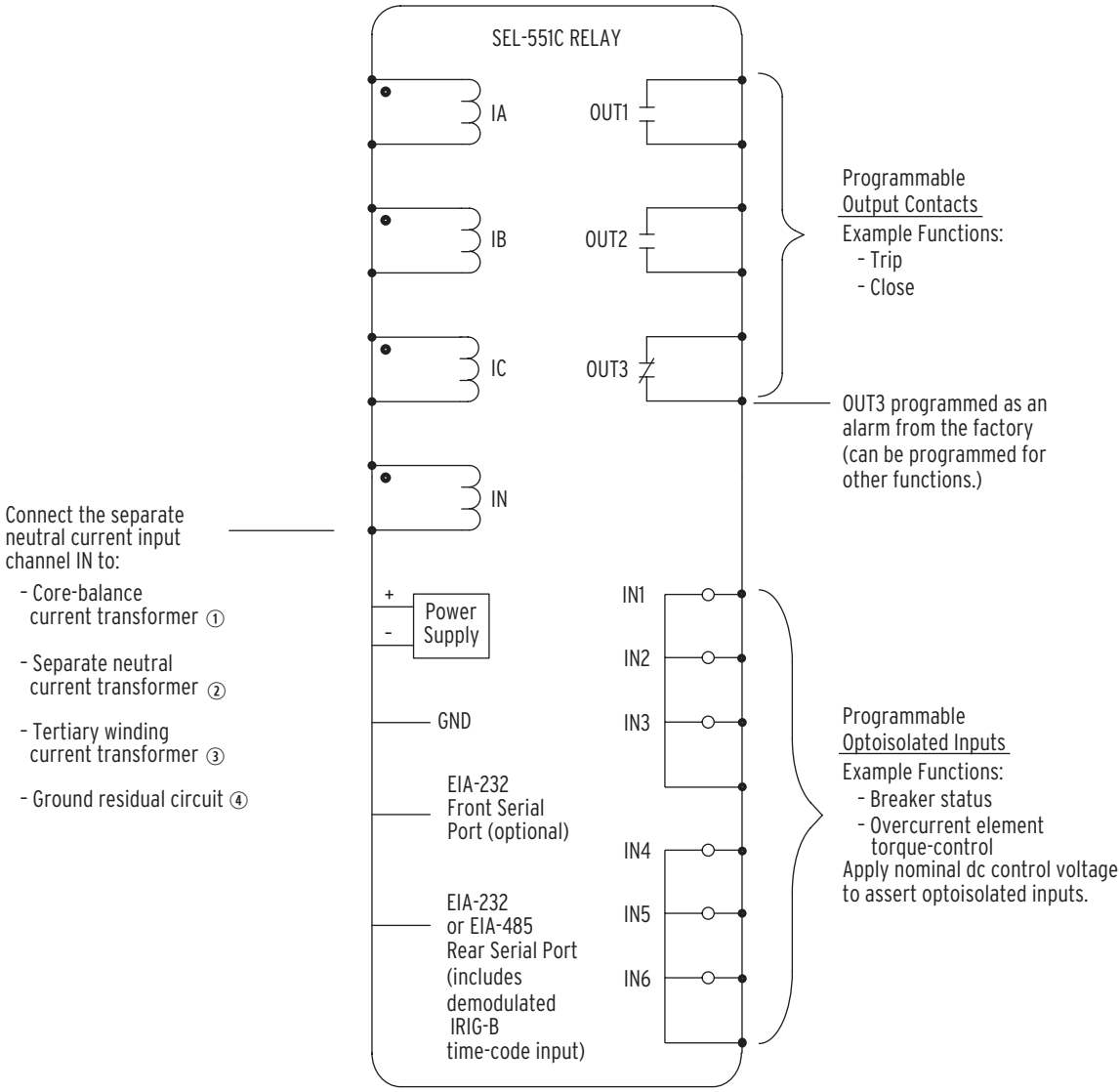

① See Figure 2.9; ② see Figure 2.10; ③ see Figure 2.11; ④ See Figure 2.8, Figure 2.12, and Figure 2.13.

Figure 1.2 SEL-551C Inputs, Outputs, and Communications Port

Specifications

General

AC Input Currents

5 A nominal: 15 A continuous, 500 A for 1 s, linear to 100 A symmetrical.

Limiting Dynamic Value: 1250 A for 1 cycle (sinusoidal waveform)

Burden: 0.16 VA at 5 A
1.15 VA at 15 A

1 A nominal: 3 A continuous, 100 A for 1 s, linear to 20 A symmetrical.

Limiting Dynamic Value: 250 A for 1 cycle (sinusoidal waveform)

Burden: 0.06 VA at 1 A
0.18 VA at 3 A

Power Supply

125/250 Vdc or Vac

Range: 85–350 Vdc or 85–264 Vac

Burden: <6.2 W

Interruption: 100 ms at 250 Vdc

Ripple: 100%

48/125 Vdc or 125 Vac

Range: 36–200 Vdc or 85–140 Vac

Burden: <5.5 W

Interruption: 100 ms at 125 Vdc

Ripple: 5%

24 Vdc

Range: 16–36 Vdc polarity dependent

Burden: <6.2 W

Interruption: 25 ms at 36 Vdc

Ripple: 5%

Note: Interruption and Ripple per IEC 60255-11:1979.

Output Contacts

Conventional Terminal Blocks Option:
Per IEC 255-0-20:1974, using the simplified method of assessment

Make: 30 A

Carry: 6 A continuous carry

1 s Rating: 100 A

MOV Protection: 270 Vac/360 Vdc

Pickup Time: <5 ms

Dropout Time: <5 ms

Breaking Capacity (10000 operations):

24 V	0.75 A	L/R = 40 ms
48 V	0.50 A	L/R = 40 ms
125 V	0.30 A	L/R = 40 ms
250 V	0.20 A	L/R = 40 ms

Cyclic Capacity (2.5 cycle/second):

24 V	0.75 A	L/R = 40 ms
48 V	0.50 A	L/R = 40 ms
125 V	0.30 A	L/R = 40 ms
250 V	0.20 A	L/R = 40 ms

Optoisolated Inputs

Note: The input type is dependent on the relay ordering options. Level-sensitive inputs differ from jumper-selectable inputs in that they are guaranteed to deassert below a certain voltage level and they are not user-settable. The inputs are not polarity dependent. With nominal control voltage applied, each input draws approximately 4 mA of current.

Conventional Terminal Blocks Option

Note: The SEL-551C comes with conventional terminal blocks and can be ordered with level-sensitive optoisolated inputs, except for the 24 Vdc optoisolated inputs option (see below).

24 Vdc: on for 15–30 Vdc (not jumper selectable)

Level-Sensitive:
Both inputs are factory configured for a fixed voltage level that cannot be changed:

48 Vdc: on for 38.4–60 Vdc; off below 28.8 Vdc

110 Vdc: on for 88–132 Vdc; off below 66 Vdc

125 Vdc: on for 105–150 Vdc; off below 75 Vdc

220 Vdc on for 176–264 Vdc; off below 132 Vdc

250 Vdc: on for 200–300 Vdc; off below 150 Vdc

Frequency and Rotation

System Frequency: 50 or 60 Hz

Phase Rotation: ABC or ACB

Serial Communications

9-pin sub-D connector

Baud Rate: 300, 1200, 2400, 4800, 9600, 19200, 38400; settable baud rate and protocol

Protocols

ASCII
Distributed Port Switch Protocol (LMD)
Modbus® RTU (rear port only; baud rate limited to 19200)

Operating Temperature

IEC Performance Rating: –40° to +85°C (–40° to +185°F)

UL/CSA Temperature Rating of +75°C:
250 V on optoisolated inputs IN1, IN3, and IN5
3 A through all output contacts
250 Vac on power supply inputs
5 A on all current input channels

Humidity

0% to 95% without condensation

Altitude

2000 m maximum

Operating Environment

Pollution Degree: 2

Overvoltage Category: II

Indoor Use

Tightening Torque

Terminal Block:

Minimum: 0.9 N-m (8-inch-pounds)

Maximum: 1.4 N-m (12-inch-pounds)

Connectorized®

Minimum: 0.5 N-m (4.4-inch-pounds)

Maximum: 1.0 N-m (8.8-inch-pounds)

Terminal Connections

Terminals or stranded copper wire. Ring terminals are recommended. Minimum temperature rating of 105°C.

Routine Dielectric Strength

AC current inputs: 2500 Vac for 10 s

Power supply, optoisolated inputs, and output contacts: 3000 Vdc for 10 s

The following IEC 60255-5 Dielectric Tests:1977 are performed on all units with the CE mark:
2500 VAC for 10 s on analog inputs.
3100 Vdc for 10 s on power supply, optoisolated inputs, and output contacts.

Weight

2.5 kg (5 lbs, 8 oz.)

Type Tests

Environmental Tests

Cold: IEC 60068-2-1:1990
[EN 60068-2-1:1993]
Test Ad; 16 hr at –40°C

Damp Heat Cyclic: IEC 60068-2-30:1980
Test Db; 25° to 55°C,
6 cycles, 95% humidity

Damp Heat Steady State IEC 60068-2-3:1969
Test Ca; 40°C ±2°C,
93% humidity +2%, –3%
4 days, Energized > 1 day

Dry Heat: IEC 60068-2-2:1974
[EN 60068-2-2:1993]
Test Bd: 16 hr at +85°C

Dielectric Strength and Impulse Tests

Dielectric: IEC 60255-5:1977
IEEE C37.90-1989
2500 Vac on analog inputs;
3100 Vdc (3000 Vdc for Plug-in Connectors option) on power supply, contact inputs, and contact outputs

Impulse: IEC 60255-5:1977 0.5 J, 5000 V

Electrostatic Discharge Test

ESD: IEC 60255-22-2:1996
[EN 60255-22-2:1996]
IEC 60801-2:1991 Level 4

RFI and Interference Tests

Fast Transient Disturbance: IEC 60255-22-4:1992
IEC 60801-2:1991 Level 4

Radiated EMI: IEC 60255-22-3:1989
IEC 60801-3:1984
IEEE C37.90.2-1987

Surge Withstand: IEC 60255-22-1:1988
2.5 kV peak common mode,
2.5 kV peak differential mode
IEEE C37.90.1-1989
3.0 kV oscillatory; 5.0 kV fast transient

Vibration and Shock Tests

Shock and Bump: IEC 60255-21-2:1988 Class 2
IEC 60255-21-3:1993 Class 2

Sinusoidal Vibration: IEC 60255-21-1:1988 Class 2

Object Penetration

Object Penetration: IEC 60529:1989 IP 30, IP 54 from the front panel using the SEL-9103 front- cover dust and splash protection

Product Safety

C22.2 No. 14-95

UL 508

Certifications

ISO: Relay designed and manufactured using ISO 9001 certified quality program.

Processing Specifications

8 times per power system cycle

Metering Accuracy

Instantaneous and Demand Ammetering Functions.

Currents I_A, I_B, I_C

5 A Nominal: ±2% (0.5–80.0 A)

1 A Nominal: ±2% (0.1–16.0 A)

Currents I_N

5 A Nominal: ±5% (0.5–80.0 A)

1 A Nominal: ±5% (0.1–16.0 A)

Overcurrent Elements

Table 1.1 Overcurrent Elements

	Instantaneous	Time-Overcurrent
Phase	50P1–50P6	51P1T, 51P2T
Single-Phase	50A, 50B, 50C	
Neutral Ground[a]	50N1, 50N2	51N1T
Residual Ground	50G1, 50G2	51G1T
Negative-Sequence (3I2)[b]	50Q1, 50Q2	51Q1T, 51Q2T
Setting Range, 5 A nominal[c]	OFF, 0.5–80.0A	OFF, 0.5–16.0A
Setting Range, 1 A nominal[c]	OFF, 0.1–16.0A	OFF, 0.1–3.2A

[a] The neutral ground overcurrent elements (50N1, 50N2, and 51N1T) operate from the separate neutral current input channel IN. All other overcurrent elements (including the residual ground overcurrent elements) operate from the phase current input channels IA, IB, and IC.
[b] **IMPORTANT:** See Appendix F: Setting Negative-Sequence Overcurrent Elements for information on setting negative-sequence overcurrent elements
[c] The available current channel ratings (5 A or 1 A) for phase (IA, IB, and IC) and neutral (IN) are specified separately-refer to the ordering information sheets for the SEL-551C.

The OFF setting disables the overcurrent element.

Time-Overcurrent Element Specifications

Pickup Accuracy:	±0.10 A secondary and ±5% of setting (5 A nominal channel) ±0.02 A secondary and ±5% of setting (1 A nominal channel)
Curve Timing Accuracy:	±1.5 cycles and ±4% of curve time for currents between (and including) 2 and 30 multiples of pickup Curves operate on definite-time for currents above 30 multiples of pickup or 16 times nominal current.
Transient overreach:	<5% of pickup

See *Section 4: Setting the Relay* for complete setting range information.

Instantaneous Overcurrent Element Specifications

Pickup Accuracy:	±0.10 A secondary and ±5% of setting (5 A nominal channel) ±0.02 A secondary and ±5% of setting (1 A nominal channel)
Transient overreach:	<5% of pickup

See *Section 4: Setting the Relay* for complete setting range information.

Instantaneous Overcurrent Element Pickup and Reset Time Curves

Figure 1.4 and *Figure 1.5* show pickup and reset time curves applicable to all the instantaneous overcurrent elements in the SEL-551C (60 Hz or 50 Hz relays). These times do not include output contact operating time and, thus, are accurate for determining element operating time for use in internal SELOGIC control equations. See *Output Contacts on page 1.5* for information on output contact operating times (pickup/dropout time). Output contact operating time has to be added to the pickup time given in *Figure 1.4* to calculate the overall instantaneous overcurrent element tripping time.

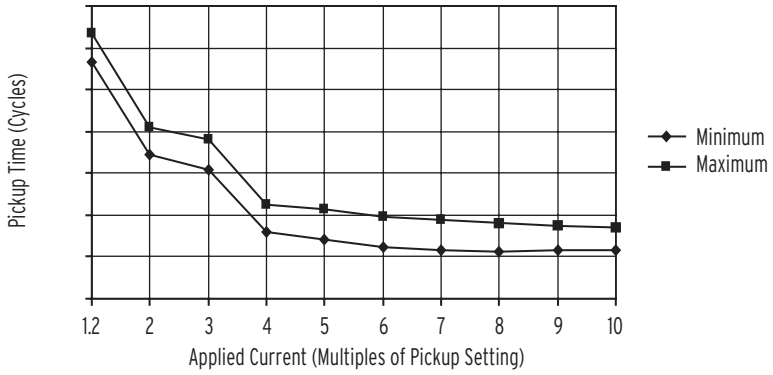

Figure 1.4 SEL-551C Instantaneous Overcurrent Element Pickup Time Curve

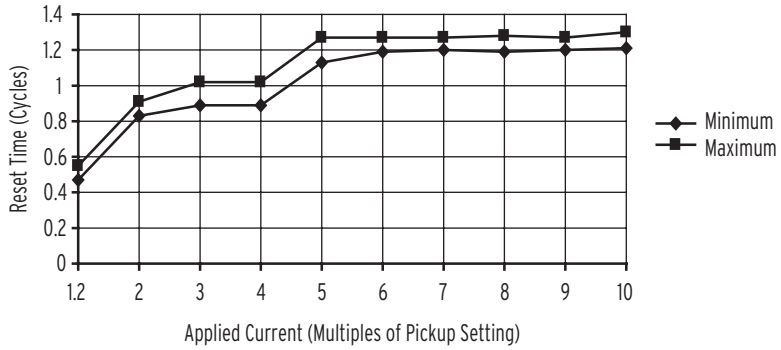

Figure 1.5 SEL-551C Relay Instantaneous Overcurrent Element Reset Time Curve

CT Saturation Protection

The SEL-551C phase instantaneous overcurrent elements normally operate using the output of a cosine filter algorithm. During heavy fault currents when the relay detects severe CT saturation, the overcurrent elements can operate on the adaptive current algorithm.

The adaptive current algorithm is only used for phase instantaneous overcurrent elements if and only if the corresponding pickup setting is greater than eight times the nominal phase current. For example, if 50P1P = 45 A (in a 5 Amp nominal phase current relay), then the 50P1 element operates on the adaptive current algorithm. However, if 50P1P = 35 A, then the 50P1 element operates on the output of a cosine filter algorithm. No other overcurrent elements use the adaptive current algorithm.

Based on the level of a “harmonic distortion index,” the adaptive current is either the output of the cosine filter or the output of the bipolar peak detector. When the harmonic distortion index exceeds the fixed threshold that indicates severe CT saturation, the adaptive current is the output of the bipolar peak detector. When the harmonic distortion index is below the fixed threshold, the adaptive current is the output of the cosine filter.

The cosine filter provides excellent performance in removing dc offset and harmonics. However, the bipolar peak detector has the best performance in situations of severe CT saturation when the cosine filter magnitude estimation is significantly degraded. Combining the two filters provides an elegant solution for ensuring dependable phase instantaneous overcurrent element operation.

Timer Specifications

The SEL-551C has reclosing relay timers, programmable timers, and other timers (see *Section 4: Setting the Relay*). All timers are set in cycles, in 1/8 cycle (0.125 cycle) increments. The relay rounds the entered time setting up or down to the nearest 1/8 cycle. For example:

Enter setting

790I1 = **264.685**

and the relay rounds it down to

790I1 = **264.625**

Enter setting

SV10PU = **1567.318**

and the relay rounds it up to

SV10PU = **1567.375**

The timing accuracy for these timers is: ±0.25 cycles and ±0.1 percent of setting

Section 2

Installation

Overview

Design your installation using the mounting and connection information in this section. Options include rack or panel mounting and terminal block or plug-in connector (Connectorized®) wiring. This section also includes information on configuring the relay for your application.

Relay Mounting

Rack Mount

A single SEL-551C Relay is roughly half the size of a standard 19-inch rack (see *Figure 2.1* and *Figure 2.5*). To mount the relay in a standard 19-inch rack follow these steps:

Step 1. Use another SEL-500 series relay in a package (P/N 9101) or use the Rack Mount Bracket (P/N 9100). See *Figure 2.2*, *Figure 2.3*, and *Figure 2.4*.

Step 2. Secure the relays with four rack screws (two on each side) that you insert from the front of the relays through the holes on the relay mounting flanges.

Step 3. Reverse the relay mounting flanges on the single or package versions to cause the relays to project 2.60 inches (66.1 mm).

This provides additional space at the rear of the relays for applications where the relays might otherwise be too deep to fit.

Panel Mount

We also offer the SEL-551C in a panel-mount version for a clean look. Panel-mount relays have sculpted front-panel molding that covers all installation holes. See *Figure 2.1* and *Figure 2.6*. For a panel-mount installation, follow these steps:

Step 1. Cut your panel and drill mounting holes according to the dimensions in *Figure 2.1*.

Step 2. Insert the relay into the cutout, aligning four relay mounting studs on the rear of the relay front panel with the drilled holes in your panel.

Step 3. Use nuts to secure the relay to your panel.

The projection panel-mount option covers all installation holes and maintains the sculpted look of the panel-mount option; the relay projects 2.60 inches (66.1 mm) from the front of your panel. This ordering option increases space at the rear of the relay for applications where the relay would ordinarily be too deep to fit your cabinet.

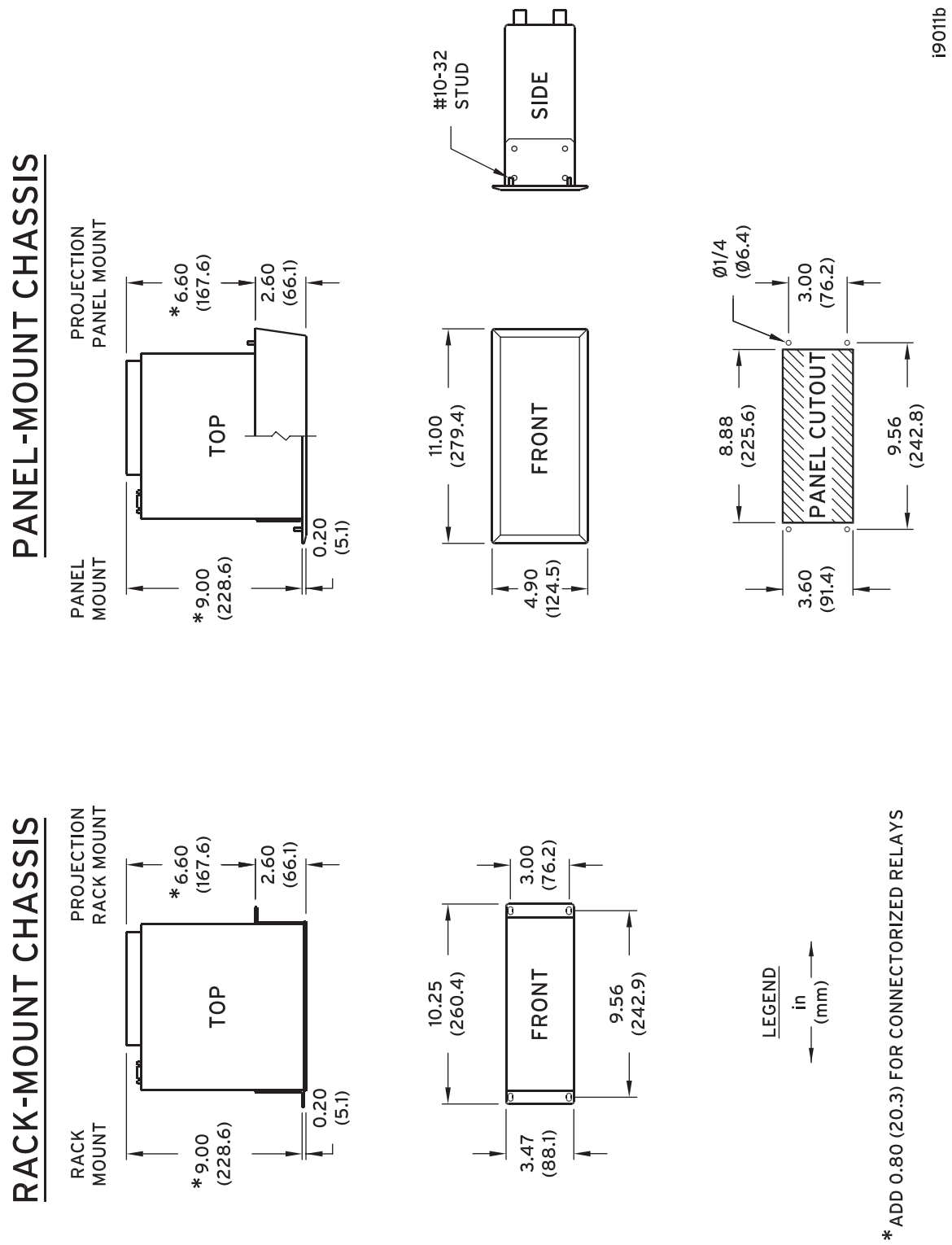

Figure 2.1 SEL-551C Dimensions, Panel Cutout, and Drill Plan

RACK-MOUNT CHASSIS

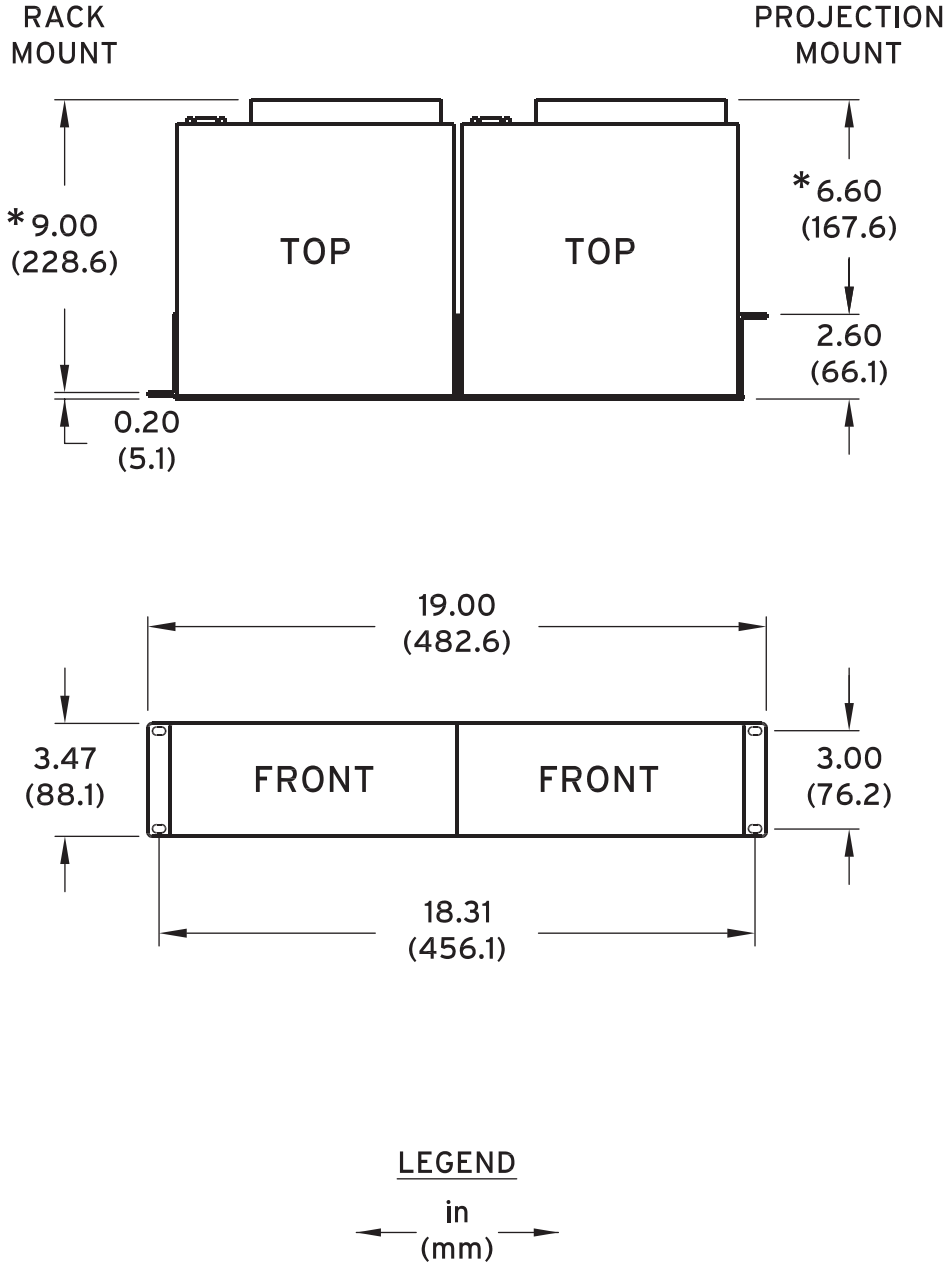

*ADD 0.80 (20.3) FOR CONNECTORIZED RELAYS

i9024b

Figure 2.2 Relay Dimensions and Drill Plan for Mounting Two SEL-500 Series Relays Together Using Mounting Block (SEL P/N 9101)

RACK-MOUNT CHASSIS

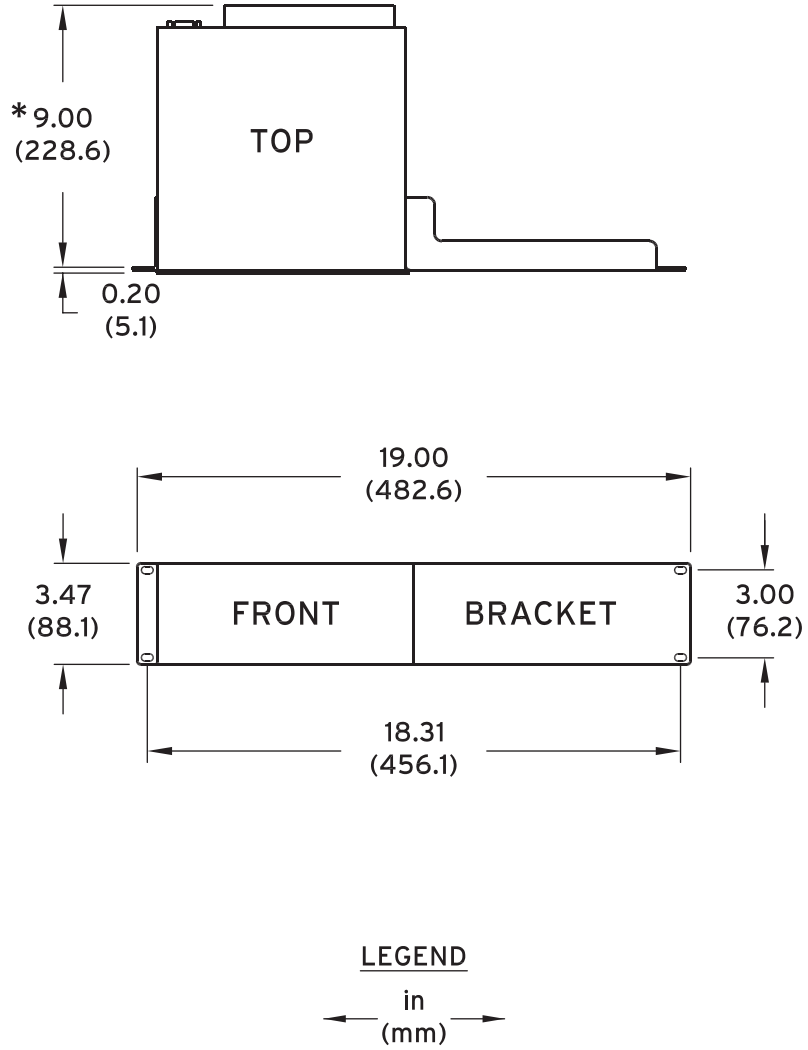

*ADD 0.80 (20.3) FOR CONNECTORIZED RELAYS

Figure 2.3 Relay Dimensions and Drill Plan for Mounting an SEL-551C With Rack Mount Bracket 9100 (Bracket on Right Side in Front View)

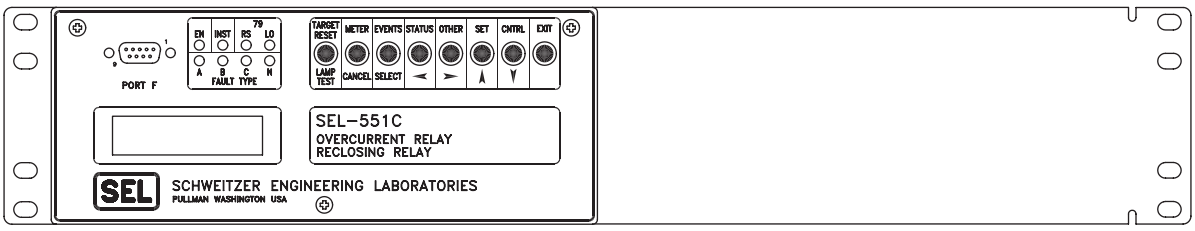

Figure 2.4 SEL-551C Fitted with Mounting Bracket (SEL P/N 9100) for Mounting in 19-Inch Rack

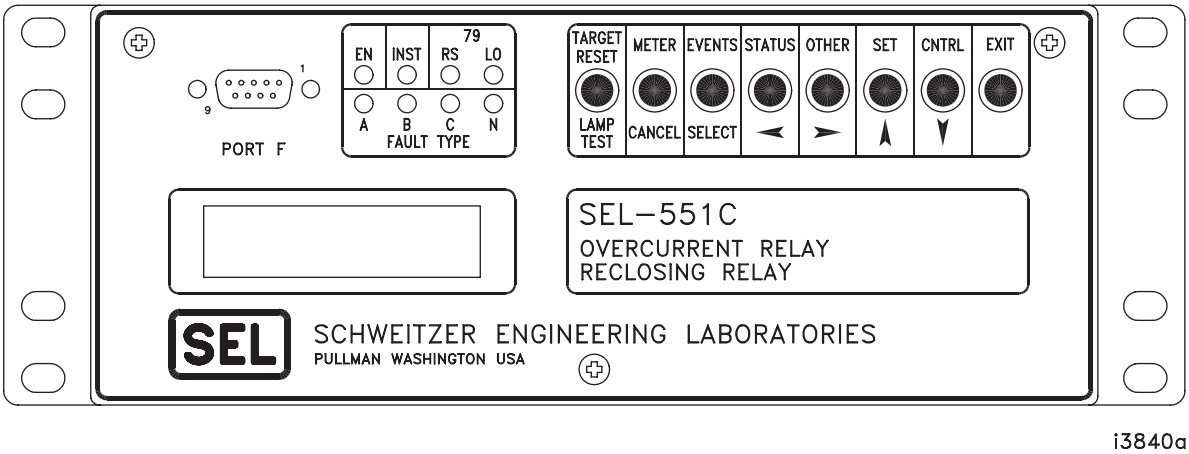

Figure 2.5 SEL-551C Front Panel With Optional EIA-232 Serial Communications Port, Rack-Mount Version (Half-Rack Width)

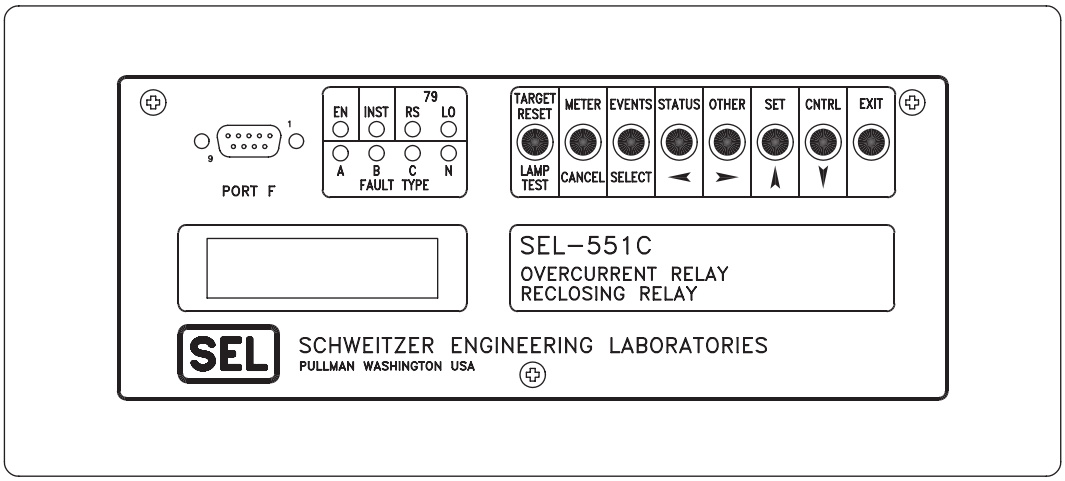

Figure 2.6 SEL-551C Front Panel, Panel-Mount Version

Rear-Panel Connections

The SEL-551C has the conventional terminal block, in which you use size #6-32 screws to secure rear-panel wiring. These connections are intended for use with copper conductors only.

Terminal Block

Make terminal block connections with size #6-32 screws using a Phillips® or slotted screwdriver. You may request locking screws from the factory. Refer to *Figure 2.7* to make all terminal block connections.

For SEL-551C connections, refer also to subsection *EN 61010-1 and the SEL-551C on page 2.18*.

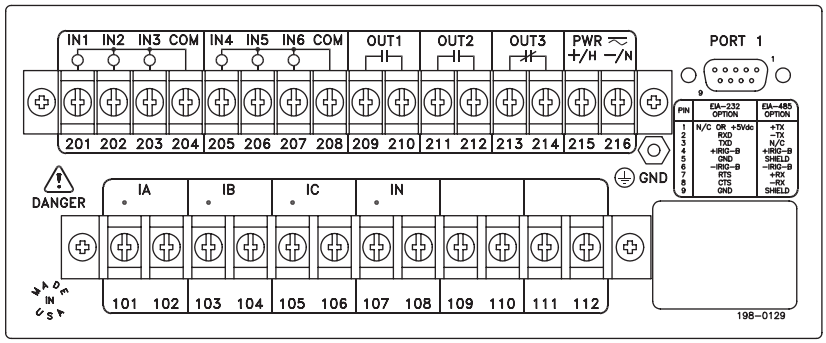

13842a

Figure 2.7 SEL-551C Rear Panel

The output contacts in *Figure 2.7* (OUT1–OUT3) are not polarity dependent.

The optoisolated inputs in *Figure 2.7* (IN1–IN6) are not polarity dependent.

All screws are size #6-32.

Screw Terminal Connections

All screw/washer styles on SEL relays are recognized by UL for field wiring using terminals or bare wire. However, as stated below, SEL strongly recommends the use of ring or fork terminals.

Two types of screw terminal are provided on the SEL relays, one with a washer (Phillips screw head - standard) and one without (slotted screw head, optional). SEL recommends using ring or fork terminals with both types of screw terminals fitted to the relays. There are two main reasons for this recommendation;

Step 1. Stray strands and inconsistent wire stripping may compromise hi-pot clearances and give rise to the potential for shorting the adjacent terminals.

Step 2. Wire/terminal secureness with ring terminals has been tested at SEL to 20 lb minimum. Bare wire has not been tested at SEL.

Both the terminal block manufacturer and UL requirements have qualified the standard terminal blocks for use with bare stranded wire, however, SEL's qualification requirements are more stringent as required by the utility and industrial applications of protective relays.

NOTE: #6 ring and fork terminals will accommodate wire sizes from 22 awg to 10 awg.

There is no limit to the number of terminals that can be clamped under one screw, however there is a maximum total thickness of .120" (3 mm). Ring terminals typically range in thickness .030" to .060".

⚠WARNING
A too-long screw will damage the inside part of the terminal. This is true for both styles of terminal block, but especially for the I/O connections.

The SEL terminal retention and hi-pot test voltage requirements are both twice that required by the UL standard.

All SEL qualification testing of terminal blocks and relays is performed with ring or fork terminals.

SEL-551C AC/DC Connection Diagrams for Example Applications

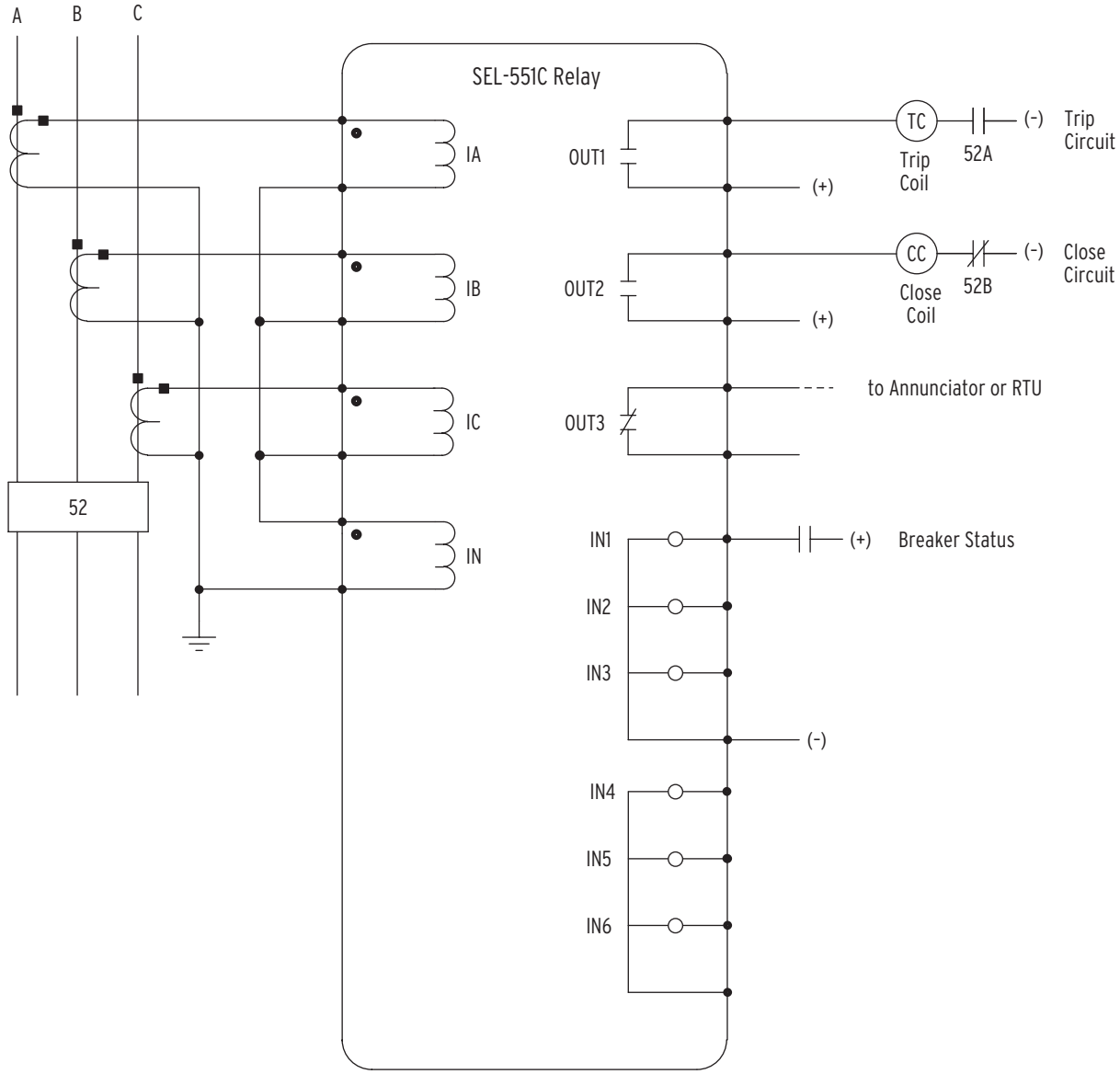

Figure 2.8 SEL-551C Provides Overcurrent Protection and Reclosing for a Utility Distribution Feeder (Includes OUT3 = !SALARM + HALARM)

An SEL-551C can be used in the application in *Figure 2.8*. Output contact **OUT3** in the SEL-551C can provide the alarm function [OUT3 = !(SALARM + HALARM) in the factory settings].

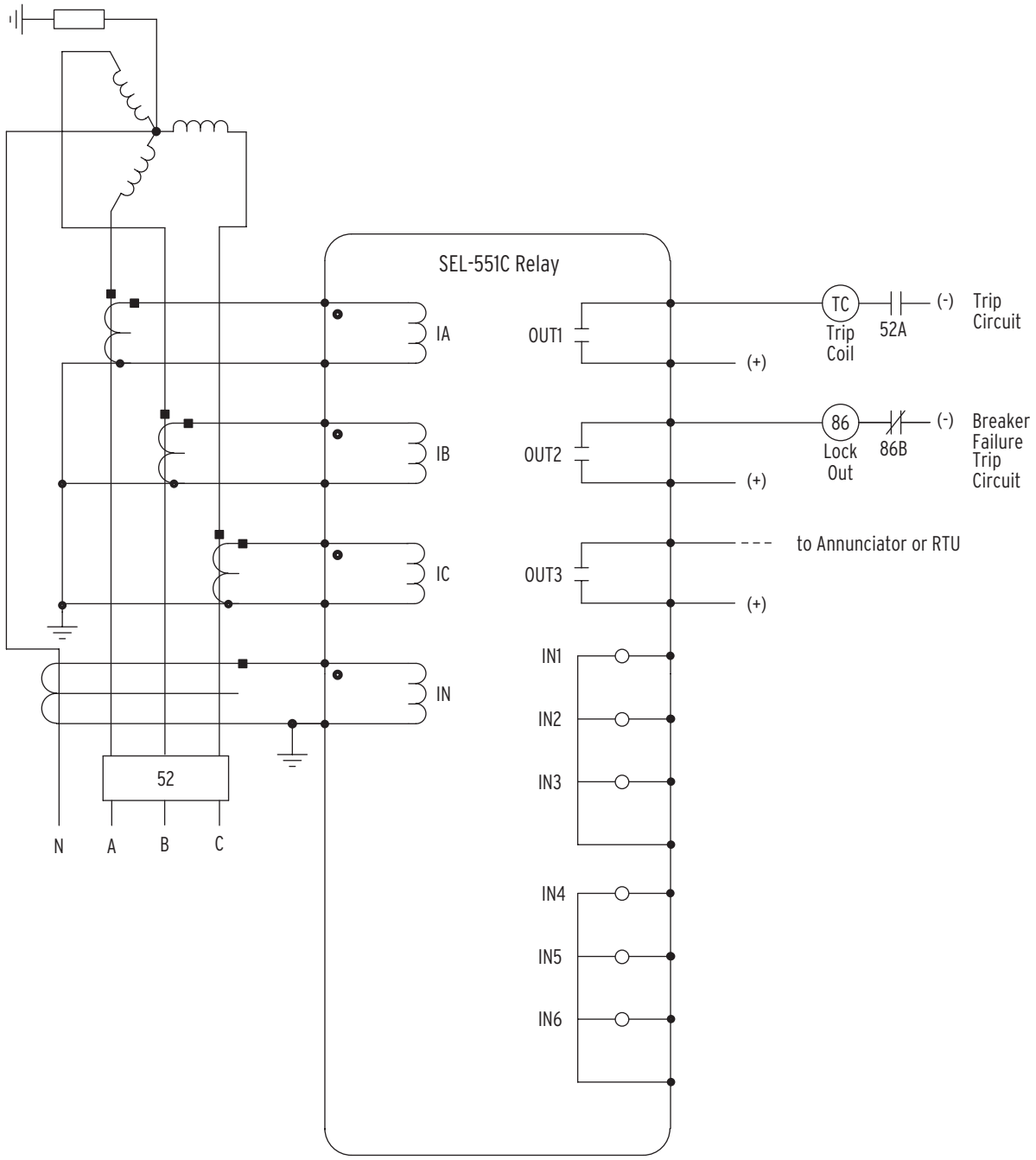

Figure 2.9 SEL-551C Provides Overcurrent Protection for an Industrial Distribution Feeder (Core-Balance Current Transformer Connected to Current Input Channel IN)

A core-balance current transformer is often referred to as a zero-sequence, ground fault, or window current transformer.

Output contact **OUT3** in the SEL-551C can provide the alarm function [OUT3 = !(SALARM + HALARM) in the factory settings].

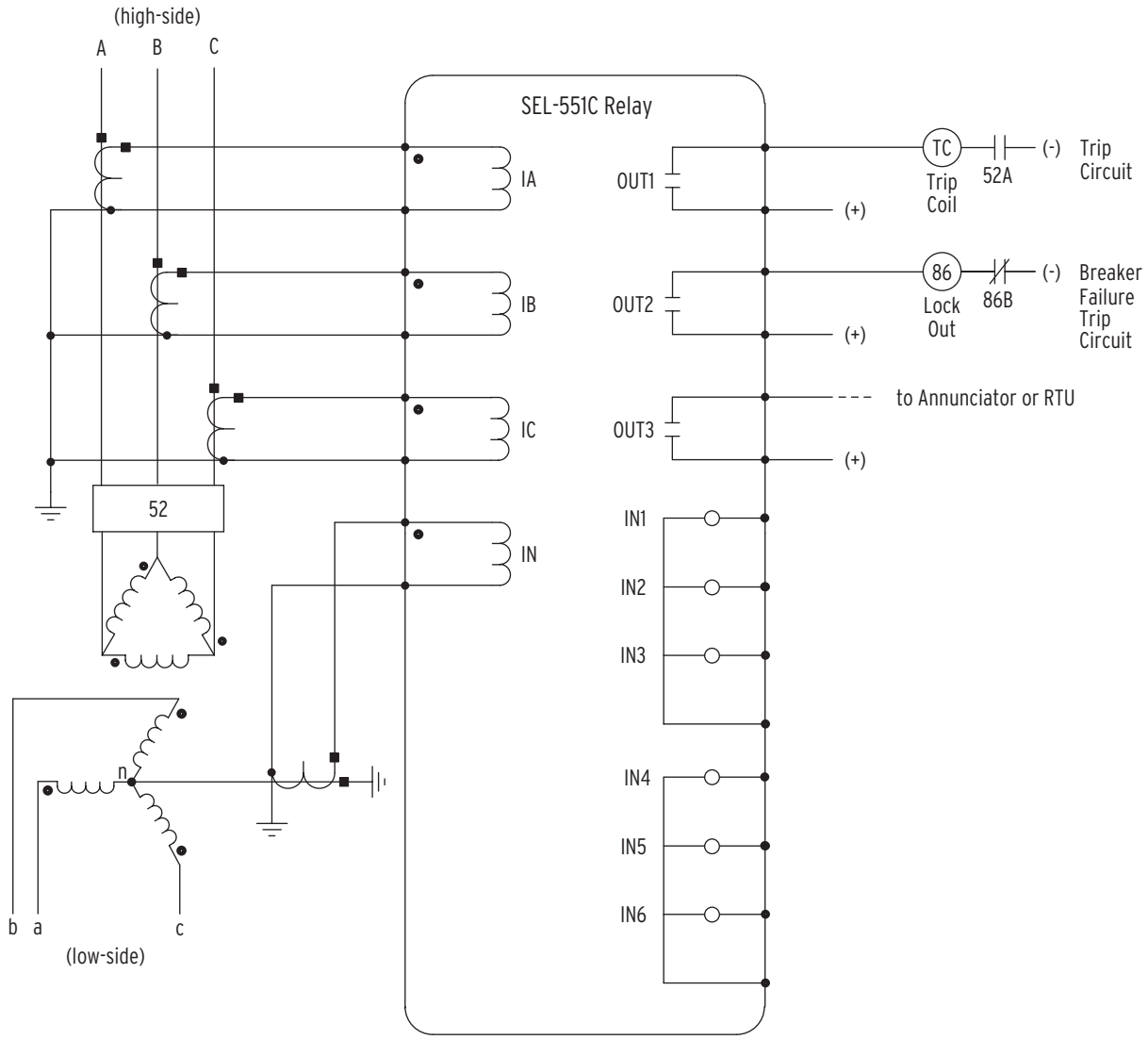

Figure 2.10 SEL-551C Provides Overcurrent Protection for a Delta-Wye Transformer Bank

Output contact **OUT3** in the SEL-551C can provide the alarm function [OUT3 = !(SALARM + HALARM) in the factory settings].

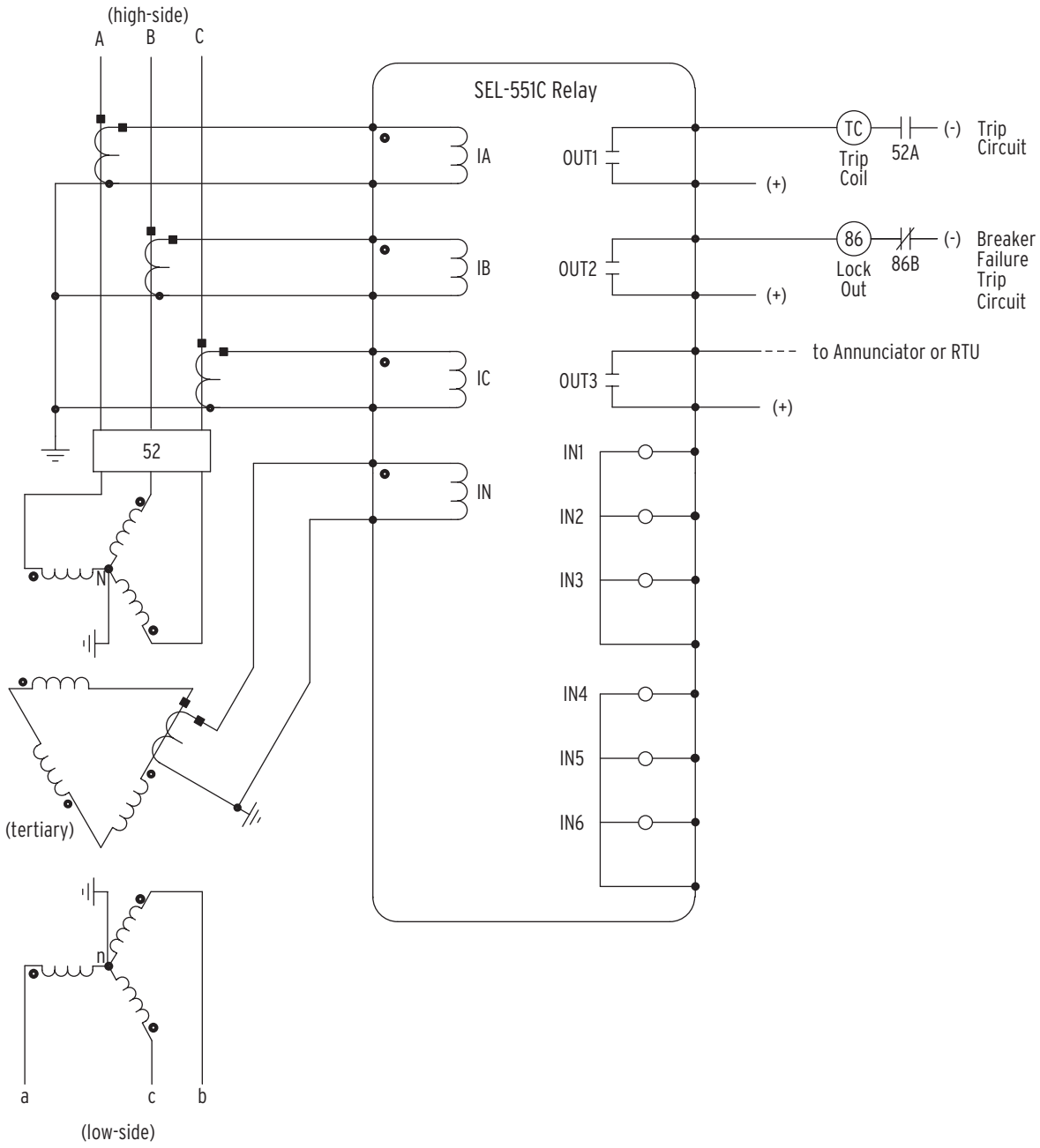

Figure 2.11 SEL-551C Provides Overcurrent Protection for a Transformer Bank with a Tertiary Winding

Output contact **OUT3** in the SEL-551C can provide the alarm function [OUT3 = !(SALARM + HALARM) in the factory settings].

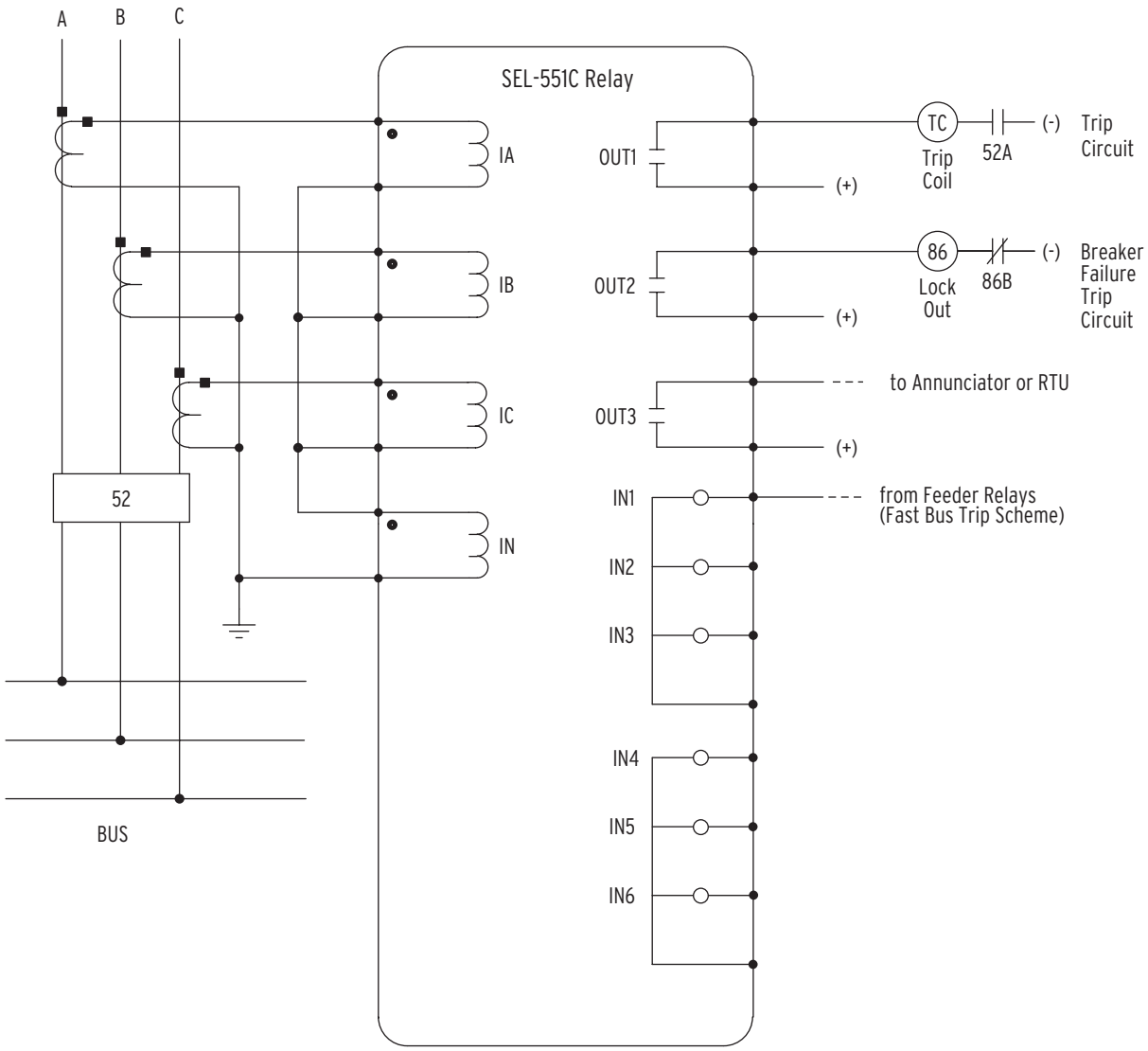

Figure 2.12 SEL-551C Provides Overcurrent Protection for a Distribution Bus (Includes Fast Bus Trip Scheme)

The fast bus trip scheme is often referred to as a reverse interlocking or zone interlocking scheme.

Output contact **OUT3** in the SEL-551C can provide the alarm function [OUT3 = !(SALARM + HALARM) in the factory settings].

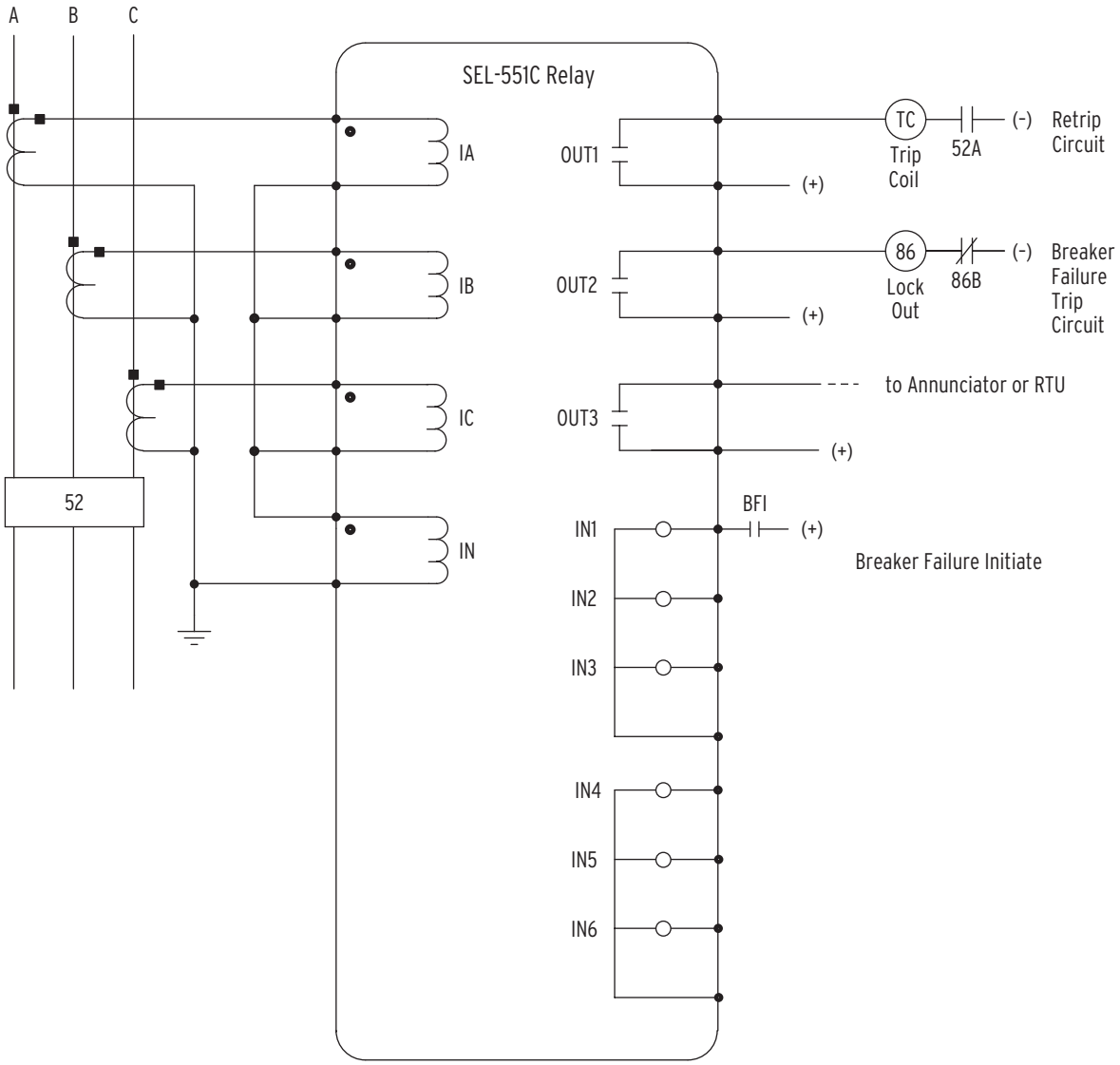

Figure 2.13 SEL-551C Provides Dedicated Breaker Failure Protection

Output contact **OUT3** in the SEL-551C can provide the alarm function [OUT3 = !(SALARM + HALARM) in the factory settings].

EIA-485 Rear-Panel Adapter

Cable C675 is used with the EIA-485 rear-panel serial communications port option to bring the pins from the 9-pin serial communications connector (see *Figure 5.1*) out to a terminal block for ease of wiring.

Circuit Board Jumpers and Battery

The SEL-551C comes with conventional terminal blocks and can be ordered with level-sensitive optoisolated inputs. See *Specifications*, *General on page 1.5* for ratings.

Output Contact Jumpers

Refer to *Figure 2.14*. Jumpers JMP2_1 through JMP4_1 select the output contact type for the output contacts. With a jumper in the A position, the corresponding output contact is an a-type output contact. An a-type output contact is open when the output contact coil is de-energized and closed when the output contact coil is energized. With a jumper in the B position, the corresponding output contact is a b-type output contact. A b-type output contact is closed when the output contact coil is de-energized and open when the output contact coil is energized. These jumpers are soldered in place.

In *Figure 2.14*, note that output contact **OUT3** is a b-type output contact and the other output contacts are all a-type output contacts. This is how these jumpers are configured in a standard relay shipment. Output contact **OUT3** is programmed as an alarm contact from the factory [OUT3 = !(SALARM + HALARM)]. Refer to *Figure 3.23* for examples of output contact operation for different output contact types.

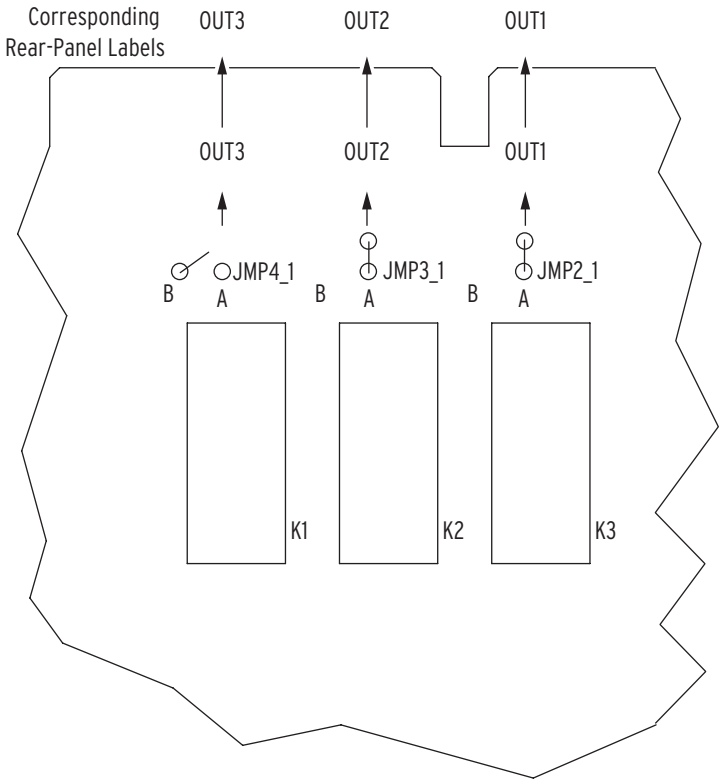

Figure 2.14 Output Jumper Locations

Password and Breaker Jumpers

Password and Breaker jumpers are on the front edge of the relay main board between the front-panel LEDs and the control pushbuttons. Remove the relay front panel to change them.

Put Password jumper **JMP22** (left-most jumper) in place to disable serial port and front-panel password protection. With the jumper removed, password security is enabled. Set the passwords with the **PASSWORD** command (see *Section 5: Serial Port Communications and Commands*).

Put Breaker jumper **JMP24** (right-most jumper) in place to enable the serial port commands **OPEN**, **CLOSE**, and **PULSE**. These commands are ignored while **JMP24** is removed. These commands are used primarily to assert output contacts for circuit breaker control or testing purposes (see *Section 5: Serial Port Communications and Commands*).

Rear-Panel EIA-232 Serial Communications Port Voltage Jumper (EIA-232 Option Only)

Jumper **JMP2** in the SEL-551C is toward the rear of the main board, near the rear-panel EIA-232 serial communications port. This jumper connects or disconnects +5 Vdc to pin 1 on the EIA-232 serial communications port. In a standard relay shipment, jumper **JMP2** would be removed (out-of-place) so that the +5 Vdc is not connected to pin 1 on the EIA-232 serial communications port. See *Figure 5.1*.

Clock Battery

⚠CAUTION
There is danger of explosion if the battery is incorrectly replaced. Replace only with Ray-O-Vac® no. BR2335 or equivalent recommended by manufacturer. Dispose of used batteries according to the manufacturer's instructions.

⚠CAUTION
The relay contains devices sensitive to Electrostatic Discharge (ESD). When working on the relay with the front panel removed, work surfaces and personnel must be properly grounded or equipment damage may result.

A lithium battery powers the relay clock (date and time) if the external dc source is lost or removed. The battery is a 3 V lithium coin cell. At room temperature (25°C), the battery will nominally operate for 10 years at rated load.

If the dc source is lost or disconnected, the battery discharges to power the clock. When the relay is powered from an external source, the battery only experiences a low self-discharge rate. Thus, battery life can extend well beyond the nominal 10 years because the battery rarely has to discharge after the relay is installed. The battery cannot be recharged.

If the battery voltage is out-of-tolerance, an automatic status message is sent to the serial port and the front-panel display.

To change the battery, take the following steps:

Step 1. De-energize the relay.

Step 2. Remove the three front-panel screws and the relay front panel.

Step 3. Disconnect the analog signal ribbon cable from the underside of the relay main board.

Step 4. Grasp the black knob on the front of the drawout assembly, and pull the assembly from the relay chassis.

Step 5. Locate the battery on the right-hand side of the relay main board.

Step 6. Remove the battery from beneath the clip, and install a new one.

The positive side (+) of the battery faces up.

Step 7. Slide the drawout assembly into the relay chassis.

Step 8. Reconnect the analog signal ribbon cable.

Step 9. Replace the relay front panel and reenergize the relay.

Step 10. Set the relay date and time via serial communications port or front panel (see *Section 5: Serial Port Communications and Commands* or *Section 6: Front-Panel Interface*, respectively).

EN 61010-1 and the SEL-551C

⚠CAUTION
Do not connect power to the SEL-551C until you have completed these procedures.

The listing of the following information assists with SEL-551C compliance to EN (European Norm) 61010-1 requirements.

Rear-Panel Symbols

There are important safety symbols on the rear of the SEL-551C (see *Figure 2.15*).

Observe proper safety precautions when you connect the SEL-551C at terminals marked by these symbols. In particular, the danger symbol located on the rear panel corresponds to the following:

> **Contact with instrument terminals can cause electrical shock that can result in injury or death.**

Be careful to limit access to these terminals.

Figure 2.15 Rear-Panel Safety Symbols

The exclamation point symbol (inside the triangle of the Danger Symbol in *Figure 2.15*, for example) is referred to as Symbol 14 in EN61010-1. The presence of Symbol 14 on a piece of equipment indicates to the user that the corresponding instruction manual should be consulted for further clarification (e.g., consult the Caution, Warning, and Danger items listed on back of the front cover of the *SEL-551C Instruction Manual*).

Power Connections

⚠DANGER
Contact with instrument terminals can cause electrical shock that can result in injury or death.

Use 16 AWG (1.5 mm^2) to 12 AWG (4 mm^2) wire to connect to the **PWR** (power) terminals. When you use a dc power source, you must connect the source with the proper polarity, as indicated by the **+** (Terminal **215**) and **-** (Terminal **216**) symbols on the power terminals. Upon connecting power, you will see the **EN** (Enabled) LED illuminate.

Disconnect device: Place an external circuit breaker no more than 3.0 m (9.8 feet) from the equipment. The circuit breaker (or an equivalent approved disconnect device appropriate for the country of installation) must comply with IEC 60947-1 and IEC 60947-3 and be identified as the disconnect device for the equipment. This disconnect device must interrupt both the hot (**H**) and neutral (**N**) power leads.

External overcurrent protection device: The maximum current rating for the external overcurrent protection device must be 20 A. Operational power is internally fused. This internal fuse is not user replaceable. Should failure occur, return the unit to the factory for repair.

Screw Terminal Connectors

Terminate connections to the SEL-551C terminal block with ring-type crimp lugs. Use a #6 ring lug with a maximum width of 8.1 mm (0.320 in.). The screws in the rear-panel terminal block are #6-32 pan-head, phil-slot, zinc-plated steel screws. Tightening torque for the terminal block screws is 0.9 Nm to 1.4 Nm (8 in-lb to 12 in-lb).

Grounding

Connect the grounding terminal labeled **GND** on the rear panel to a rack frame ground or main station ground for proper safety and performance. Use 12 AWG ($4mm^2$) or heavier wire less than 2 m (6.6 feet) in length for this connection. The ground connection should be made before the power connections.

Cleaning

Use care when cleaning the SEL-551C. Use a mild soap or detergent solution and a damp cloth to clean the chassis. Be careful cleaning the front and rear panels because a permanent plastic sheet covers each panel; do not use abrasive materials, polishing compounds, or harsh chemical solvents (such as xylene or acetone) on any surface.

This page intentionally left blank

Section 3

Relay Elements and Logic

Relay Word Bits and SELOGIC Control Equations

This section describes relay elements and logic with numerous figures and accompanying text. Details on setting ranges are given in the setting sheets in *Section 4: Setting the Relay*. See the *SHO Command (Showset) on page 5.19* for a listing of the factory settings shipped with the relay.

Relay Word Bits

The outputs of the logic in most of the figures in this section are labeled Relay Word bits. Relay Word bits have label names (e.g., 51P1T, TRIP, CLOSE, etc.). They are logic points that can have a state of:

1 (logical 1) or 0 (logical 0)

depending on the operation of the associated logic. Logical 1 represents an element being picked up, timed out, or otherwise asserted. Logical 0 represents an element being dropped out or otherwise deasserted. All Relay Word bits and their descriptions are shown in *Table 4.5* and *Table 4.6* and are used in SELOGIC® control equations.

SELOGIC Control Equations

SELOGIC control equation settings are the inputs for the logic in many of the figures in this section. See the *SELOGIC Control Equation Settings (SET L Command) on page SET.7* for a listing and short description of each of the SELOGIC control equation settings. See the *SHO Command (Showset)* for a listing of the factory SELOGIC control equation settings shipped with the relay. Create traditional or advanced custom schemes with SELOGIC control equations.

SELOGIC control equation settings are written in Boolean algebra logic, combining Relay Word bits together with different operators. Parentheses can also be used in SELOGIC control equation settings. More than one set of parentheses can be used in a given SELOGIC control equations setting, but they cannot be "nested" (parentheses within parentheses). See *Trip Logic on page 3.19* and *Reclosing Relay on page 3.25* for examples of using parentheses (factory settings for ULTR and 79BRS, respectively). Operators in a SELOGIC control equations setting are processed in the following order:

Table 3.1 Processing Order of SELOGIC Control Equation Operators

Operator	Logic Function
/	rising-edge detect
\	falling-edge detect
( )	parentheses
!	NOT
*	AND
+	OR

In addition to Relay Word bits, numerals:

1 (logical 1) or 0 (logical 0)

can be entered in a SELOGIC control equations setting. If a SELOGIC control equation setting is set equal to 1, it is always "asserted/on/enabled." If a SELOGIC control equation setting is set equal to 0, it is always "deasserted/off/disabled." Under the *SHO Command (Showset)*, note that a number of the factory SELOGIC control equation settings are set equal to 1 or 0.

Limitations

Any single SELOGIC control equation setting is limited to nine Relay Word bits that can be combined together with the SELOGIC control equation operators listed in *Table 3.1*. To get around this limitation, a SELOGIC Variable (SELOGIC control equation settings SV1–SV14) can be used as an intermediate setting step.

For example, presume that the trip equation (SELOGIC control equation setting TR) needs more than nine Relay Word bits in its equation setting. Part of the desired equation is put into the SELOGIC control equation setting SV1. The resultant SELOGIC Variable output (Relay Word bit SV1) is then set in SELOGIC control equation setting TR.

Note in *Table 3.2* that the SELOGIC Variables (SELOGIC control equation settings SV1–SV14) are processed after the trip equation (SELOGIC control equations setting TR). Thus, any tripping via Relay Word bit SV1 is delayed one processing interval (1/8-cycle). For most applications, this is probably of no consequence.

For all the SELOGIC control equations settings in total, the SEL-551C relay has limits of 310 Relay Word bits that can be combined together with the SELOGIC control equation operators listed in *Table 3.1*.

Up to 16 total rising-edge and falling-edge detects can be used in SELOGIC control equations settings for the SEL-551C relay. Examples of their operation and application are given in *Figure 3.31*–*Figure 3.34* and accompanying text. These examples show the application of rising-edge detects, but a falling-edge detect is similar (looking for a logical 1 to 0 transition, instead of a logical 0 to 1 transition), with the same "one-processing interval" logical 1 pulse output.

Refer to *Figure 3.32* for an example, imagining that there is a \IN4 (falling edge of input IN4) time trace present (as there is for existing time trace /IN4 [rising edge of input IN4]). Everywhere that top time trace IN4 transitions from logical 1 to logical 0 (falling edge) in *Figure 3.32*, there would be a "one-processing interval" logical 1 pulse output on the \IN4 time trace. This is akin to the "one-processing interval" logical 1 pulse output shown on the /IN4 time trace for logical 0 to logical 1 (rising edge) in *Figure 3.32*.

Processing Order and Processing Interval

The relay elements and logic (and corresponding SELOGIC control equation settings and resultant Relay Word bits) are processed in the order shown in *Table 3.2* (top to bottom). They are processed every eighth-cycle (1/8-cycle), and the Relay Word bit states (logical 1 or logical 0) are updated with each eighth cycle pass. Thus, the relay processing interval is 1/8-cycle. Once a Relay Word bit is updated during an eighth-cycle pass, it retains the state (logical 1 or logical 0) until it is updated again on the next eighth-cycle pass.

The Display Points (DP1–DP8) are described in *Section 6: Front-Panel Interface*. The Event Report Triggers (ER1 and ER2) are described in *Section 7: Standard Event Reports and SER*. The other items in *Table 3.2* are described in the rest of this section, in the order given in *Table 3.2*. The exception to this order is *Demand Ammetering on page 3.45*.

Table 3.2 Processing Order of Relay Elements and Logic (Top to Bottom)

Relay Elements and Logic (corresponding SELOGIC Control Equations listed in parentheses)	Resultant Relay Word Bits
Optoisolated Inputs	IN1, IN2, IN3, IN4, IN5, IN6
Local Control Switches	LB1–LB8
Remote Control Switches	RB1–RB8
Demand Ammetering	PDEM, NDEM, GDEM, QDEM
Latch Control Switches (SET1–SET8, RST1–RST8)	LT1–LT8
Instantaneous Overcurrent Elements	50P1–50P6, 50A, 50B, 50C, 50N1, 50N2, 50G1, 50G2, 50Q1, 50Q2
Time-Overcurrent Elements	
(51P1TC, 51P2TC, 51N1TC, 51G1TC, 51Q1TC, 51Q2TC)	51P1, 51P2, 51N1, 51G1, 51Q1, 51Q2, 51P1T, 51P2T, 51N1T, 51G1T, 51Q1T, 51Q2T, 51P1R, 51P2R, 51N1R, 51G1R, 51Q1R, 51Q2R
Trip Logic (TR, ULTR)	TRIP
Close Logic (52A, CL, ULCL) Reclosing Relay (79RI, 79RIS, 79DTL, 79DLS, 79SKP, 79STL, 79BRS, 79SEQ)	CLOSE, CF, 79RS, 79CY, 79LO, SH0, SH1, SH2, SH3, SH4
SELOGIC Variables/Timers (SV1–SV14)	SV1–SV14, SV5T–SV14T
Programmable Alarm Conditions	SALARM, HALARM
Output Contacts (OUT1–OUT3)	OUT1–OUT3
Display Points (DP1–DP8)	
Event Report Triggers (ER1, ER2)	

Optoisolated Inputs

Relay Word bits IN1–IN6 follow optoisolated inputs **IN1** through **IN6**, respectively. See *Figure 3.1* for the optoisolated inputs available with the SEL-551C Relay. This figure gives examples of an energized and de-energized optoisolated input and corresponding Relay Word bit states. Note the built-in pickup and dropout times of 0.25 cycles for energization or de-energization debounce.

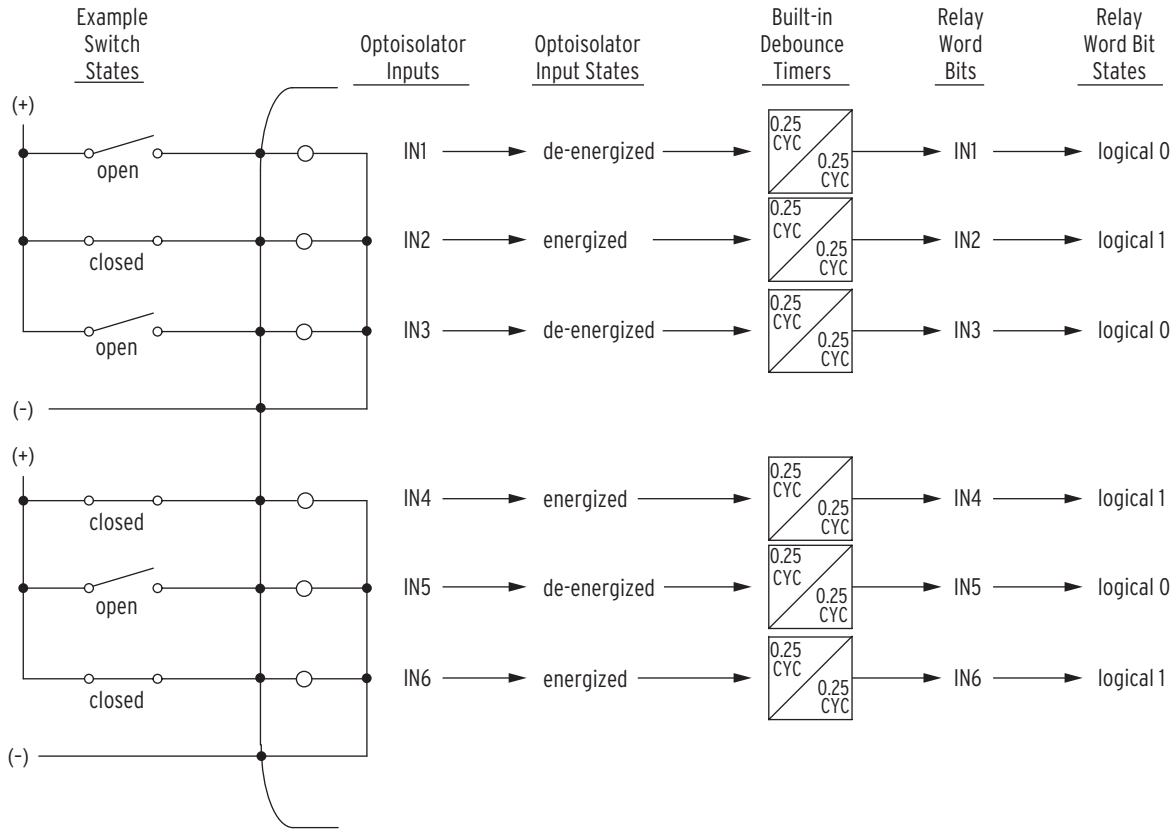

Figure 3.1 Example Operation of SEL-551C Optoisolated Inputs

There are no optoisolated input settings such as:

IN1 =

IN2 =

Optoisolated inputs **IN1**–**IN6** receive their function by how their corresponding Relay Word bits IN1–IN6 are used in SELOGIC control equations.

Factory Settings Example

Relay Word bit IN1 is used in the factory settings for the SELOGIC control equations circuit breaker status setting:

52A = **IN1**

Connect input **IN1** to a 52a circuit breaker auxiliary contact. See *Close Logic on page 3.22* and *Reclosing Relay on page 3.25* for more information on SELOGIC control equations setting 52A.

Input **IN1** is also used in other factory settings discussed later in this section (i.e., SELOGIC control equation settings 79RIS and DP2). Just because Relay Word bit IN1 is assigned to the circuit breaker status setting 52A, it does not mean that Relay Word bit IN1 cannot be used in other SELOGIC control equation settings.

In the factory settings, Relay Word bits IN2–IN6 are not used.

Additional Settings Examples

52b Circuit Breaker Auxiliary Contact

If a 52b circuit breaker auxiliary contact is connected to input **IN1**, the setting is changed to:

52A = **!IN1** [!IN1 = NOT(IN1)]

Time-Qualify Optoisolated Inputs

If an input needs to be debounced or time-qualified more than the built-in 0.25 cycles, assign the input to a SELOGIC Variables timer (see *Figure 3.21*):

SV6 = **IN1**

The output of the timer (Relay Word bit SV6T) can then be used in place of Relay Word bit IN1. For example, the timer output can be assigned to the SELOGIC control equations circuit breaker status setting:

52A = **SV6T**

Other Examples

Other example SELOGIC control equation settings in this section use the optoisolated inputs **IN1**–**IN6** for such applications as breaker failure initiation, time-overcurrent element torque control, reclose initiation, and reclose timing stall condition.

Local Control Switches

Local control switches emulate traditional panel switches and are operated via the front-panel keyboard/display only (see *Section 6: Front-Panel Interface*; **{CNTRL}** pushbutton).

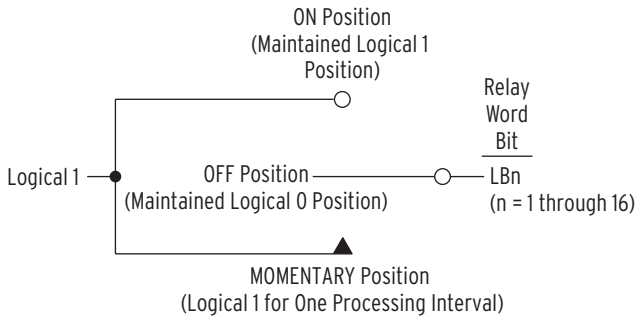

The switch representation in this figure is derived from the standard:

Graphics Symbols for Electrical and Electronics Diagrams IEEE Std 315-1975, CSA Z99-1975, ANSI Y32.2-1975, 4.11 Combination Locking and Nonlocking Switch, Item 4.11.1

Figure 3.2 Local Control Switches Drive Local Bits LB1–LB8

The output of the local control switch in *Figure 3.2* is a Relay Word bit (local bit LB*n*, *n* = 1–8). These local bits are used in SELOGIC control equations. For a given local control switch, the local control switch positions are enabled by making corresponding label settings.

Table 3.3 Correspondence Between Local Control Switch Positions and Label Settings

Switch Position	Label Setting	Setting Definition	Logic State
ON	SLB*n*	"Set" Local bit LB*n*	logical 1
OFF	CLB*n*	"Clear" Local bit LB*n*	logical 0
MOMENTARY	PLB*n*	"Pulse" Local bit LB*n*	logical 1 for one processing interval

Each local control switch also has a corresponding "name" label setting NLB*n*. Label settings are made with serial port command **SET T** and viewed with serial port command **SHO T** (see *Section 4: Setting the Relay* and *Section 5: Serial Port Communications and Commands*).

Any given local control switch can be configured to be one of the following three switch types:

- ON/OFF
- OFF/MOMENTARY
- ON/OFF/MOMENTARY

Table 3.4 Correspondence Between Local Control Switch Types and Required Label Settings

Local Switch Type	Label NLBn	Label CLBn	Label SLBn	Label PLBn
ON/OFF	X	X	X	
OFF/MOMENTARY	X	X		X
ON/OFF/MOMENTARY	X	X	X	X

If a local control switch is not being used, "null out" all its corresponding label settings to make it inoperable (see *Section 4: Setting the Relay*). The local bit that is "driven" by this inoperable local control switch is fixed at logical 0.

Factory Settings Example

Local bits LB1, LB3, and LB4 are used in a number of the factory settings in this section. The factory settings examples control reclose enable/disable, manual tripping, and manual closing. Their corresponding local control switch position label settings are:

Local Bit	Label Settings	Function
LB1	NLB1 = RECLOSER	enables/disables reclosing relay; see *Reclosing Relay on page 3.25* (setting 79DTL)
	CLB1 = DISABLE	OFF position
	SLB1 = ENABLE	ON position
	PLB1 =	MOMENTARY position—not used
LB3	NLB3 = MANUAL TRIP	trips breaker and drive reclosing relay to lockout; see *Trip Logic on page 3.19* and *Reclosing Relay* (setting 79DTL)
	CLB3 = RETURN	OFF position ("return from MOMENTARY" position)
	SLB3 =	ON position—not used
	PLB3 = TRIP	MOMENTARY position
LB4	NLB4 = MANUAL CLOSE	closes breaker, separate from reclosing relay algorithm; see *Close Logic on page 3.22*
	CLB4 = RETURN	OFF position ("return from MOMENTARY" position)
	SLB4 =	ON position—not used
	PLB4 = CLOSE	MOMENTARY position

The operation of these local control switches through the front panel is demonstrated in *Section 6: Front-Panel Interface*.

Additional Settings Examples

Other application ideas for local bits are:

- ground relay enable/disable
- remote control supervision
- sequence coordination enable/disable

Local bits can be applied to almost any control scheme.

Local Bit States Retained When Power Is Lost or Settings Changed

Power Loss

The states of the local bits (Relay Word bits LB1–LB8) are retained if power is lost to the relay and then it is restored. If a local control switch is in the **ON** position (corresponding local bit is asserted to logical 1) when power is lost, it will come back in the **ON** position (corresponding local bit is still asserted to logical 1) when power is restored. If a local control switch is in the **OFF** position (corresponding local bit is deasserted to logical 0) when power is lost, it will come back in the **OFF** position (corresponding local bit is still deasserted to logical 0) when power is restored. This is akin to a traditional installation with front-panel control switches. If power is lost to the panel, the front-panel control switches remain in position.

Settings Change

If relay settings are changed, the states of the local bits (Relay Word bits LB1–LB8) are retained, much like in the *Power Loss* explanation. The exception is if a new local control switch is configured as an OFF/MOMENTARY switch. Then, the corresponding local bit is forced to start at logical 0 after the settings change, regardless of the local bit state before the settings change.

If the local control switch is made inoperable because of a settings change, the corresponding local bit is fixed at logical 0, regardless of the local bit state before the settings change.

Remote Control Switches

Remote control switches are operated via the serial communications port only (see *CON Command (Control) on page 5.25*).

The output of the remote control switch in *Figure 3.3* is a Relay Word bit (remote bit RB*n*, *n* = 1–8). These remote bits are used in SELOGIC control equations.

Any given remote control switch can be put in one of the following three positions:

- ON (logical 1)
- OFF (logical 0)
- MOMENTARY (logical 1 for one processing interval)

With SELOGIC control equations, the remote bits can be used in applications similar to those that local bits are used in (see *Local Control Switches on page 3.6*).

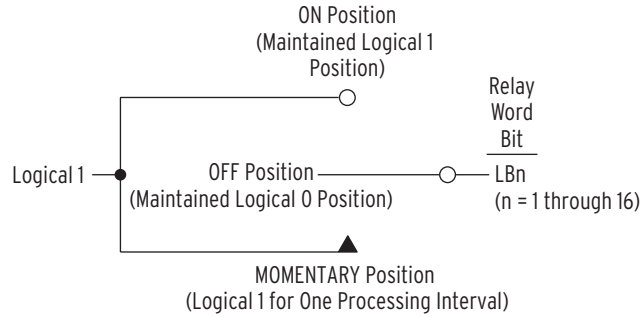

The switch representation in this figure is derived from the standard: Graphics Symbols for Electrical and Electronics Diagrams IEEE Std 315-1975, CSA Z99-1975, ANSI Y32.2-1975, 4.11 Combination Locking and Nonlocking Switch, Item 4.11.1

Figure 3.3 Remote Control Switches Drive Remote Bits RB1–RB8

Remote Bit States Not Retained When Power Is Lost

The states of the remote bits (Relay Word bits RB1–RB8) are not retained if power is lost to the relay and then it is restored. The remote control switches come back in the **OFF** position (corresponding remote bit is deasserted to logical 0) when power is restored to the relay.

Remote Bit States Retained When Settings Changed

If relay settings are changed, the states of the remote bits (Relay Word bits RB1–RB8) are retained. If a remote control switch is in the **ON** position (corresponding remote bit is asserted to logical 1) before a settings change, it will come back in the **ON** position (corresponding remote bit is still asserted to logical 1) after the settings change. If a remote control switch is in the **OFF** position (corresponding remote bit is deasserted to logical 0) before a settings change, it will come back in the **OFF** position (corresponding remote bit is still deasserted to logical 0) after the settings change.

Instantaneous Overcurrent Elements

See the setting sheets in *Section 4: Setting the Relay* for instantaneous overcurrent element setting range information.

See *Trip Logic on page 3.19* for an example of tripping with a phase instantaneous overcurrent element (setting TR).

See *Reclosing Relay on page 3.25* for an example of using a phase instantaneous overcurrent element to skip a reclosing shot (setting 79SKP).

See *SELOGIC Control Equation Variables/Timers on page 3.41* to create definite-time overcurrent elements with SELOGIC control equations (combining instantaneous overcurrent elements with timers.)

Phase Instantaneous Overcurrent Elements

Six phase instantaneous overcurrent elements (50P1–50P6) are available (see *Figure 3.4*). Their pickup settings (50P1P–50P6P, respectively) are compared to the magnitude of the maximum phase current (I_P = maximum of I_A, I_B, or I_C). The phase current is normally the output of the cosine filter algorithm, but during CT saturation the phase current can be the output of the adaptive current algorithm if the pickup setting is greater than eight times nominal phase current.

For example, if 50P1P = 45 A (in a 5 A nominal phase current relay), the I_P input into the 50P1 logic is the maximum phase current output of the adaptive current algorithm. If 50P1P = 35 A, then the I_P input into the 50P1 logic is the maximum phase current output of a cosine filter algorithm.

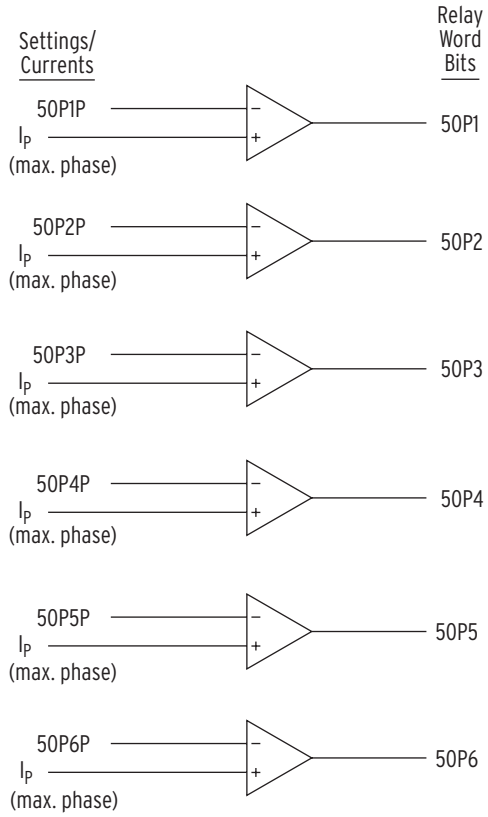

Figure 3.4 Phase Instantaneous Overcurrent Elements 50P1–50P6

Example 50P1 element operation:

I_P > pickup setting 50P1P, then Relay Word bit 50P1 = logical 1

I_P ≤ pickup setting 50P1P, then Relay Word bit 50P1 = logical 0

If pickup setting 50P1P is set to 50P1P = OFF, then element 50P1 is disabled. Relay Word bit 50P1 equals logical 0 at all times.

The other five phase instantaneous overcurrent elements (50P2–50P6) operate similarly.

Single-Phase Instantaneous Overcurrent Elements

Single-phase instantaneous overcurrent elements (50A, 50B, and 50C) are available (see *Figure 3.5*). The pickup setting (50ABCP, used for all three single-phase elements) is compared to the magnitude of the single-phase current (I_A, I_B, and I_C). The phase current is normally the output of the cosine filter algorithm, but during CT saturation the phase current can be the output of the adaptive current algorithm if the pickup setting is greater than eight times nominal phase current.

For example, if 50ABCP = 45 A (in a 5 A nominal phase current relay), the I_A input into the 50A logic is the maximum phase A adaptive current algorithm, the I_B input into the 50B logic is the maximum phase B adaptive current algorithm, and the I_C input into the 50C logic is the maximum phase C adaptive current algorithm. If 50ABCP = 35 A, the I_A input into 50A logic is the maximum phase A current output of cosine filter algorithm, the I_B input into 50B logic is the maximum phase B current output of cosine filter algorithm, and the I_C input into 50C logic is the maximum phase C current output of cosine filter algorithm.

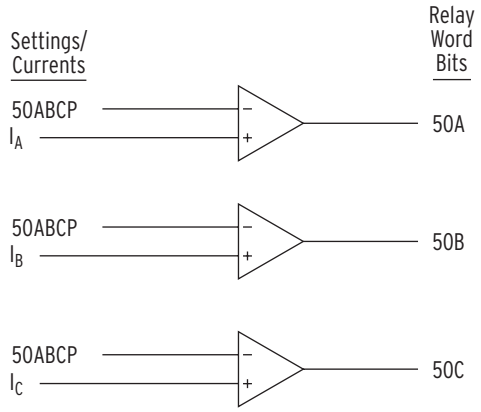

Figure 3.5 Single-Phase Instantaneous Overcurrent Elements 50A, 50B, and 50C

Example 50A element operation:

I_A > pickup setting 50ABCP, then Relay Word bit 50A = logical 1

I_A ≤ pickup setting 50ABCP, then Relay Word bit 50A = logical 0

If pickup setting 50ABCP is set to 50ABCP = OFF, then element 50A is disabled. Relay Word bit 50A equals logical 0 at all times.

The other two phase instantaneous overcurrent elements (50B and 50C) operate similarly.

Neutral Ground Instantaneous Overcurrent Elements

Two neutral ground instantaneous overcurrent elements (50N1 and 50N2) are available (see *Figure 3.6*). Their pickup settings (50N1 and 50N2, respectively) are compared to the magnitude of the neutral ground current (I_N). This current is from separate neutral current input channel **IN** (see *Figure 1.2*).

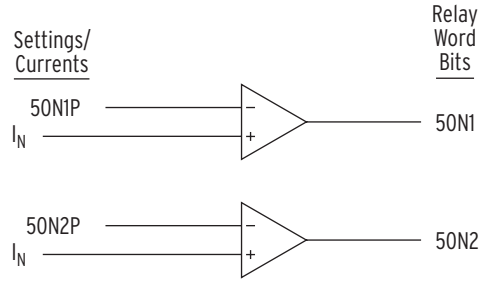

Figure 3.6 Neutral Ground Instantaneous Overcurrent Elements 50N1 and 50N2

Example 50N1 element operation:

I_N > pickup setting 50N1P, then Relay Word bit 50N1 = logical 1

I_N ≤ pickup setting 50N1P, then Relay Word bit 50N1 = logical 0

If pickup setting 50N1P is set to 50N1P = OFF, then element 50N1 is disabled. Relay Word bit 50N1 equals logical 0 at all times.

The second neutral ground instantaneous overcurrent element (50N2) operates similarly.

Residual Ground Instantaneous Overcurrent Elements

Two residual ground instantaneous overcurrent elements (50G1 and 50G2) are available (see *Figure 3.7*). Their pickup settings (50G1 and 50G2, respectively) are compared to the magnitude of the residual ground current ($I_G = 3I_0$, derived from I_A, I_B, and I_C).

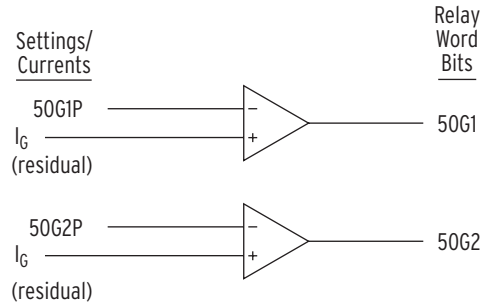

Figure 3.7 Residual Ground Instantaneous Overcurrent Elements 50G1 and 50G2

Example 50G1 element operation:

I_G > pickup setting 50G1P, then Relay Word bit 50G1 = logical 1

I_G ≤ pickup setting 50G1P, then Relay Word bit 50G1 = logical 0

If pickup setting 50G1P is set to 50G1P = OFF, then element 50G1 is disabled. Relay Word bit 50G1 equals logical 0 at all times.

The second residual ground instantaneous overcurrent element (50G2) operates similarly.

Negative-Sequence Instantaneous Overcurrent Elements

IMPORTANT: See Appendix F for information on setting negative-sequence overcurrent elements.

Two negative-sequence instantaneous overcurrent elements (50Q1 and 50Q2) are available (see *Figure 3.8*). Their pickup settings (50Q1 and 50Q2, respectively) are compared to the magnitude of the negative-sequence current ($3I_2$, derived from I_A, I_B, and I_C).

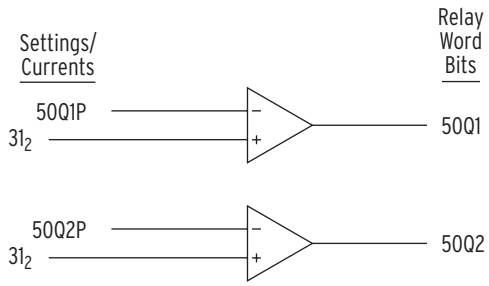

Figure 3.8 Negative-Sequence Instantaneous Overcurrent Elements 50Q1 and 50Q2

Example 50Q1 element operation:

$3I_2$ > pickup setting 50Q1P, then Relay Word bit 50Q1 = logical 1

$3I_2 \leq$ pickup setting 50Q1P, then Relay Word bit 50Q1 = logical 0

If pickup setting 50Q1P is set to 50Q1P = OFF, then element 50Q1 is disabled. Relay Word bit 50Q1 equals logical 0 at all times.

The second negative-sequence instantaneous overcurrent element (50Q2) operates similarly.

Time-Overcurrent Elements

See the setting sheets in *Section 4: Setting the Relay* for time-overcurrent element setting range information.

See *Trip Logic on page 3.19* for examples of tripping with time-overcurrent elements (setting TR) and unlatching tripping with time-overcurrent element pickups (setting ULTR).

See *Reclosing Relay on page 3.25* for an example of using time-overcurrent element pickups to block reset timing (setting 79BRS).

Phase Time-Overcurrent Elements

Two phase time-overcurrent elements (51P1T and 51P2T) are available (see *Figure 3.9*). Their pickup settings (51P1P and 51P2P, respectively) are compared to the magnitude of the maximum phase current (I_P = maximum of I_A, I_B, or I_C).

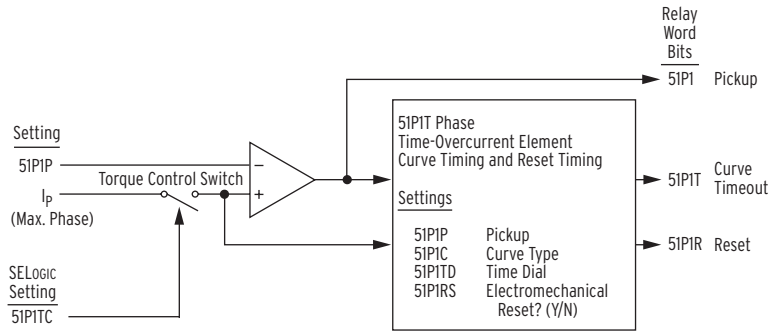

SELOGIC Setting 51P1TC Controls the Torque Control Switch

51P1TC State	Torque Control Switch Position
Logical 1	Closed
Logical 0	Open

Setting 51P1RS =	Reset Timing
Y	Electromechanical
N	1 Cycle

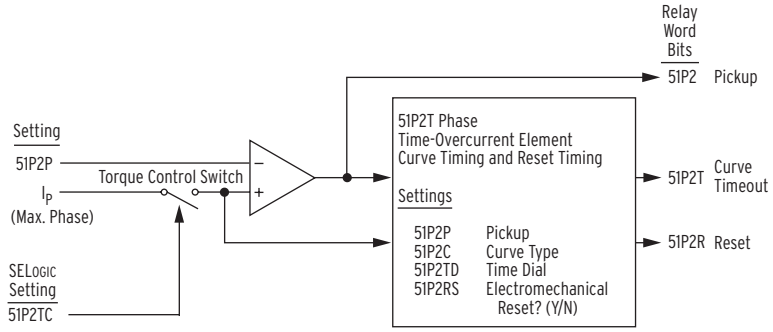

SELOGIC Setting 51P2TC Controls the Torque Control Switch

51P2TC State	Torque Control Switch Position
Logical 1	Closed
Logical 0	Open

Setting 51P2RS =	Reset Timing
Y	Electromechanical
N	1 Cycle

Figure 3.9 Phase Time-Overcurrent Elements 51P1T and 51P2T

The following is an example of 51P1T element operation; the other time-overcurrent elements operate similarly:

Torque Control Setting

SELOGIC control equations setting 51P1TC (torque control for phase time-overcurrent element 51P1T) controls the input of current I_P into the pickup comparator and the curve timing/reset timing function.

If 51P1TC = logical 1 and I_P > pickup setting 51P1P, then:

Relay Word bit 51P1 (pickup indication) = logical 1

and

curve timing takes place if element 51P1T is not already timed-out.

If 51P1TC = logical 1 and $I_P \leq$ pickup setting 51P1P, then:

Relay Word bit 51P1 (pickup indication) = logical 0

and

reset timing takes place if element 51P1T is not already reset.

If 51P1TC = logical 0, then:

Relay Word bit 51P1 (pickup indication) = logical 0 at all times.

Also, no current I_P goes into the curve timing/reset timing function—no curve timing takes place [effectively, the magnitude of I_P as seen by the curve timing/reset timing function is zero (0), and reset timing takes place if the element is not already reset].

Example Torque Control Settings

NOTE: Torque control equation settings cannot be set directly to logical 0.

Note in *SHO Command (Showset) on page 5.19* that the factory settings for 51P1TC and the other time-overcurrent element torque control settings are set equal to 1:

51P1TC = **1**

Thus, the time-overcurrent elements are enabled all the time, and they behave as detailed previously for 51P1TC = logical 1.

Other Torque Control Setting Ideas

51P1TC = **IN1** apply nominal control voltage to optoisolated input **IN1**, resulting in 51P1TC = logical 1; remove nominal control voltage to optoisolated input **IN1**, resulting in 51P1TC = logical 0

51P1TC = **LB2** assert local bit LB2 via the front-panel pushbuttons/display, resulting in 51P1TC = logical 1; deassert local bit LB2 via the front-panel pushbuttons/display, resulting in 51P1TC = logical 0

Many other torque control setting ideas are available with the flexibility of SELOGIC control equations.

Curve Timing/Reset Timing

In addition to SELOGIC control equations setting 51P1TC, phase time-overcurrent element 51P1T curve timing/reset timing are subject to settings:

51P1P pickup

51P1C curve type

51P1TD time dial

51P1RS electromechanical reset timing? (Y/N); see *Time-Overcurrent Element Setting Reference Information on page 4.4*.

If reset timing setting 51P1RS = Y, element 51P1T reset timing emulates electromechanical reset timing. If current I_P goes above pickup setting 51P1P (element 51P1T is timing or already timed out) and then current I_P goes below pickup setting 51P1P, element 51P1T starts to time to reset, emulating electromechanical reset timing. Relay Word bit 51P1R (reset indication) = logical 1 when element 51P1T is fully reset.

If reset timing setting 51P1RS = N, element 51P1T reset timing is a one-cycle dropout. If current I_P goes above pickup setting 51P1P (element 51P1T is timing or already timed out) and then current I_P goes below pickup setting 51P1P, there is a one-cycle delay before element 51P1T fully resets. Relay Word bit 51P1R (reset indication) = logical 1 when element 51P1T is fully reset.

Any time current I_P goes above pickup setting 51P1P and element 51P1T starts timing, Relay Word bit 51P1R (reset indication) = logical 0. If the curve times out, Relay Word bit 51P1T (curve timeout indication) = logical 1.

Disable Time-Overcurrent Element With Pickup Setting

If pickup setting 51P1P is set 51P1P = OFF, phase time-overcurrent element 51P1T is disabled all the time. Relay Word bits 51P1, 51P1T, and 51P1R all equal logical 0 at all times.

Applications for Time-Overcurrent Element Relay Word Bits

Relay Word Bit	Relay Word Bit Definition	Application
51P1	pickup indication	Primarily for testing or other SELOGIC control equation applications. See *Trip Logic on page 3.19* (setting ULTR). See *Reclosing Relay on page 3.25* (setting 79BRS).
51P1T	curve timeout indication	Primarily for tripping or other SELOGIC control equation applications. See *Trip Logic* (setting TR).
51P1R	reset indication	Primarily for testing.

The second phase time-overcurrent element in *Figure 3.9* (51P2T) and the other time-overcurrent elements operate similarly.

Neutral Ground Time-Overcurrent Element

One neutral ground time-overcurrent element (51N1T) is available (see *Figure 3.10*). Its pickup setting (51N1P) is compared to the magnitude of the neutral ground current (I_N). This current is from separate neutral current input channel IN (see *Figure 1.2*).

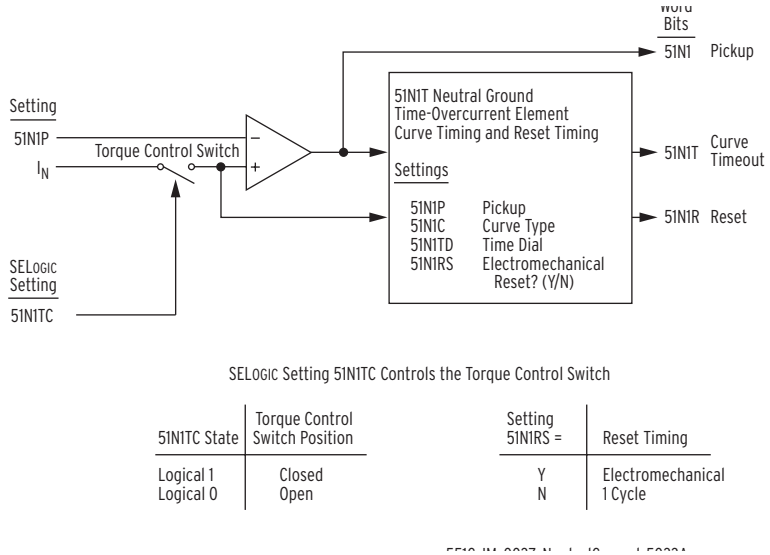

Figure 3.10 Neutral Ground Time-Overcurrent Element 51N1T

To understand the operation of *Figure 3.10* for the neutral ground time-overcurrent element (51N1T), follow the explanation given for *Figure 3.9* for the first phase time-overcurrent element (51P1T), substituting I_N for I_P and like settings and Relay Word bits.

Residual Ground Time-Overcurrent Element

One residual ground time-overcurrent element (51G1T) is available (see *Figure 3.11*). Its pickup setting (51G1P) is compared to the magnitude of the residual ground current ($I_G = 3I_0$, derived from I_A, I_B, and I_C).

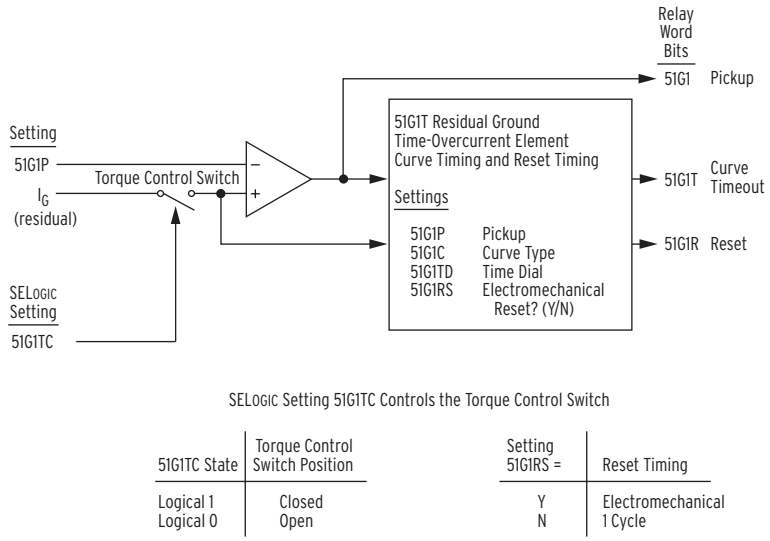

Figure 3.11 Residual Ground Time-Overcurrent Element 51G1T

To understand the operation of *Figure 3.11* for the residual ground time-overcurrent element (51G1T), follow the explanation given for *Figure 3.9* for the first phase time-overcurrent element (51P1T), substituting I_G for I_P and like settings and Relay Word bits.

Negative-Sequence Time-Overcurrent Elements

IMPORTANT: See Appendix F for information on setting negative-sequence overcurrent elements.

Two negative-sequence time-overcurrent elements (51Q1T and 51Q2T) are available (see *Figure 3.12*). Their pickup settings (51Q1P and 51Q2P) are compared to the magnitude of the negative-sequence current ($3I_2$, derived from I_A, I_B, and I_C).

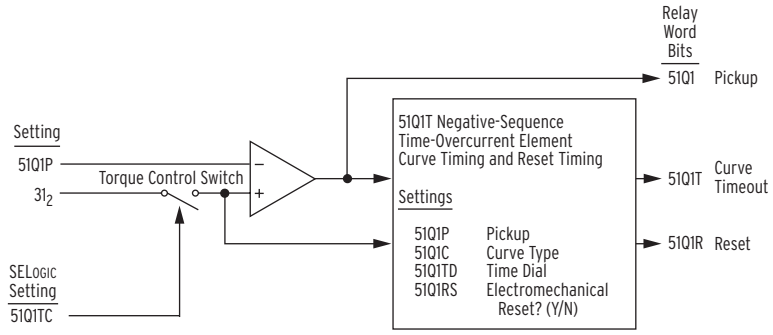

SELOGIC Setting 51Q1TC Controls the Torque Control Switch

51Q1TC State	Torque Control Switch Position
Logical 1	Closed
Logical 0	Open

Setting 51Q1RS =	Reset Timing
Y	Electromechanical
N	1 Cycle

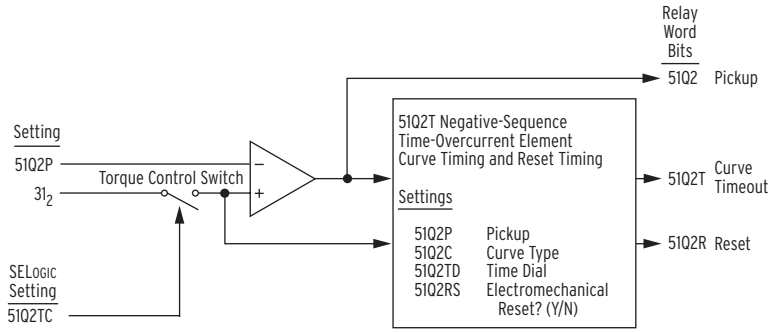

SELOGIC Setting 51P2TC Controls the Torque Control Switch

51Q2TC State	Torque Control Switch Position
Logical 1	Closed
Logical 0	Open

Setting 51Q2RS =	Reset Timing
Y	Electromechanical
N	1 Cycle

Figure 3.12 Negative-Sequence Time-Overcurrent Elements 51Q1T and 51Q2T

To understand the operation of *Figure 3.12* for the negative-sequence time-overcurrent elements (51Q1T and 51Q2T), follow the explanation given for *Figure 3.9* for the first phase time-overcurrent element (51P1T), substituting $3I_2$ for I_P and like settings and Relay Word bits.

Trip Logic

The trip logic in *Figure 3.13* provides flexible tripping with SELOGIC control equation settings:

TR Trip Conditions

ULTR Unlatch Trip Conditions

and setting:

TDURD Minimum Trip Duration Time

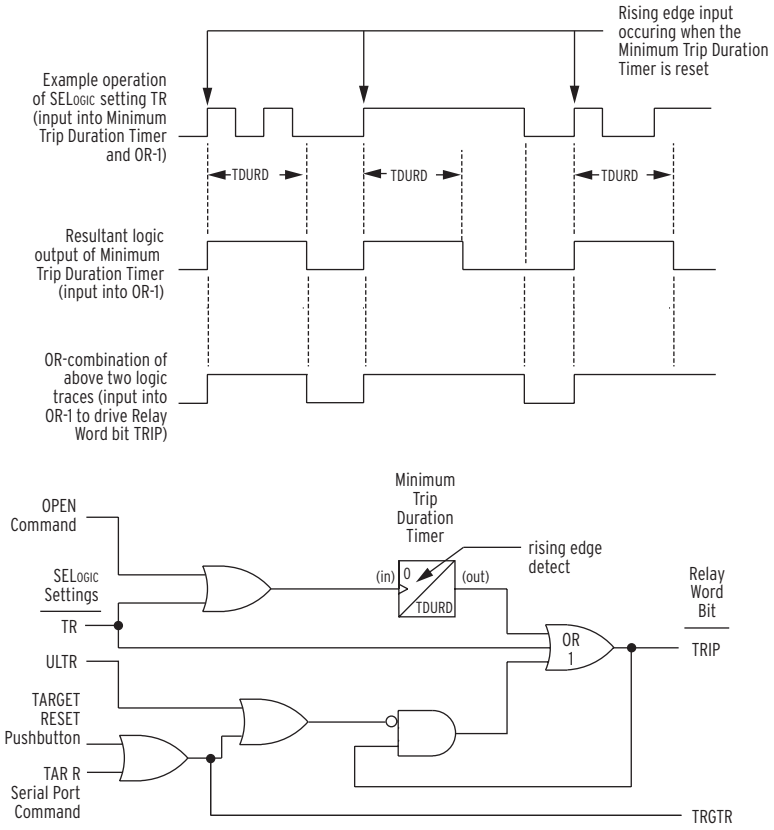

Figure 3.13 Trip Logic

Set Trip

Any time setting TR = logical 1, Relay Word bit TRIP asserts to logical 1, regardless of other trip logic conditions.

As shown in the time line example in *Figure 3.13*, the Minimum Trip Duration Timer (setting TDURD) outputs a logical 1 for a time duration of "TDURD" cycles any time it sees a rising edge on its input (logical 0 to logical 1 transition), if it is not already timing. The TDURD timer assures that the TRIP Relay Word bit remains asserted at logical 1 for a minimum of "TDURD" cycles. If SELOGIC control equation setting TR = logical 1 beyond the TDURD time, Relay Word bit TRIP remains asserted at logical 1 for as long as TR = logical 1.

Execution of the serial communications port **OPEN** command causes the TRIP Relay Word bit to assert to logical 1 if the TDURD timer is set greater than zero (0) cycles.

Unlatch Trip

Once Relay Word bit TRIP is asserted to logical 1, it remains asserted at logical 1 until all the following conditions come true:

- Trip Duration Timer stops timing (output of the TDURD timer goes to logical 0),
- SELOGIC control equation setting TR deasserts to logical 0,

and one of the following occurs:

- SELOGIC control equation setting ULTR asserts to logical 1,
- The front-panel **{TARGET RESET}** pushbutton is pressed,
- Or the **TAR R** (Target Reset) command is executed via the serial port.

The front-panel **{TARGET RESET}** pushbutton or **TAR R** (Target Reset) serial port command is primarily used during testing only (the **TAR R** serial port command can also be effectively operated via Modbus® protocol—see *Appendix G: Modbus RTU Communications Protocol*). They are used to deassert the TRIP Relay Word bit to logical 0 if test conditions are such that setting ULTR does not assert to logical 1 to automatically deassert the TRIP Relay Word bit instead.

Other Applications for the Target Reset Function

Refer to the bottom of *Figure 3.13*. Note that the combination of the **{TARGET RESET}** pushbutton and the **TAR R** (Target Reset) serial port command is also available as Relay Word bit TRGTR. See *Figure 3.35* and accompanying text for applications for Relay Word bit TRGTR.

Factory Settings Example

The factory settings for the trip logic SELOGIC control equation settings are:

TR = **51P1T + 51G1T + 50P1*SH0 + LB3** (trip conditions)

ULTR = **!(51P1 + 51G1)** (unlatch trip conditions)

The factory setting for the Minimum Trip Duration Timer setting is:

TDURD = **9.000 cycles**

See the setting sheets in *Section 4: Setting the Relay* for setting ranges.

Set Trip

In SELOGIC control equation setting TR = 51P1T + 51G1T + 50P1*SH0 + LB3:

- Time-overcurrent elements 51P1T and 51G1T trip directly.
- Phase instantaneous overcurrent element 50P1 is supervised by Relay Word bit SH0 in an ANDed condition (50P1*SH0). Element 50P1 can only get through to trip when SH0 = logical 1 (reclosing relay is at shot = 0). After the first trip in a reclose cycle, the shot increments from 0 to 1, SH0 = logical 0, and element 50P1 can then not get through to trip. See *Reclosing Relay on page 3.25* for more information on reclosing relay operation.
- Local bit LB3 trips directly (operates as a manual trip switch via the front-panel). See *Local Control Switches on page 3.6* and *Section 6: Front-Panel Interface* for more information on local control.

With setting TDURD = 9.000 cycles, once the TRIP Relay Word bit is asserted via the **OPEN** command or setting TR, it remains asserted at logical 1 for a minimum of nine cycles.

Unlatch Trip

In SELOGIC control equation setting ULTR = !(51P1 + 51G1):

- ➤ Both time-overcurrent element pickups 51P1P and 51G1P must be deasserted before the trip logic unlatches and the TRIP Relay Word bit deasserts to logical 0.

ULTR = **!(51P1 + 51G1)** = NOT(51P1 + 51G1) = NOT(51P1) * NOT(51G1)

Additional Settings Examples

The factory setting for SELOGIC control equation setting ULTR is a current-based trip unlatch condition. A circuit breaker status unlatch trip condition can be programmed as shown in the following examples.

Unlatch Trip With 52a Circuit Breaker Auxiliary Contact

A 52a circuit breaker auxiliary contact is wired to optoisolated input **IN1**.

52A = **IN1** (SELOGIC Control Equation Breaker Status Setting—see *Close Logic on page 3.22*)

ULTR = **!IN1**

Input **IN1** has to be de-energized (52a circuit breaker auxiliary contact has to be open) before the trip logic unlatches and the TRIP Relay Word bit deasserts to logical 0.

ULTR = **!IN1** = NOT(IN1)

Unlatch Trip With 52b Circuit Breaker Auxiliary Contact

A 52b circuit breaker auxiliary contact is wired to optoisolated input **IN1**.

52A = **!IN1** (SELOGIC Control Equation Breaker Status setting—see *Close Logic*)

ULTR = **IN1**

Input **IN1** must be energized (52b circuit breaker auxiliary contact has to be closed) before the trip logic unlatches and the TRIP Relay Word bit deasserts to logical 0.

Program an Output Contact for Tripping

In the factory settings, the resultant of the trip logic in *Figure 3.13* is routed to output contact **OUT1** with the following SELOGIC control equation:

OUT1 = **TRIP**

See *Output Contacts on page 3.43* for more information on programming output contacts.

Close Logic

The close logic in *Figure 3.14* provides flexible circuit breaker closing/auto reclosing with SELOGIC control equation settings:

- CL (close conditions, other than automatic reclosing or **CLOSE** command)
- ULCL (unlatch close conditions, other than breaker status, close failure, or reclose initiation)
- 52A (breaker status)

and setting:

- CFD (Close Failure Time)

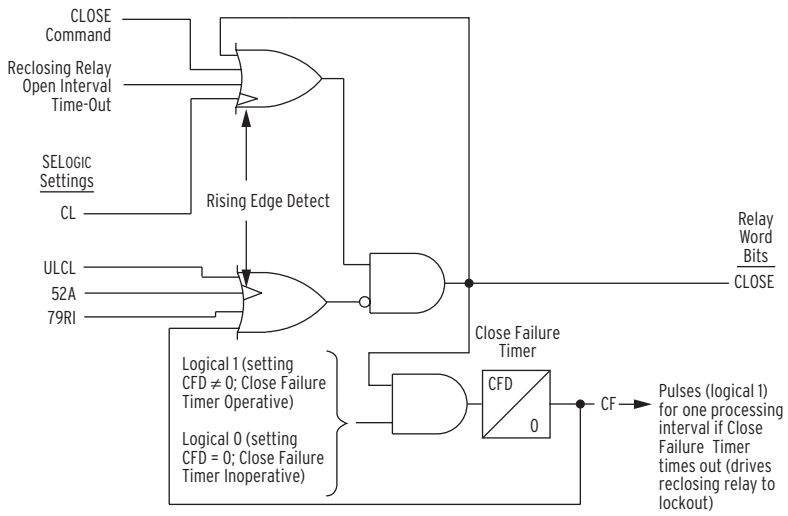

Figure 3.14 Close Logic

Set Close

If *all* the following are true:

- The unlatch close condition is not asserted (ULCL = logical 0),
- The circuit breaker is open (52A = logical 0),
- The reclose initiation condition (79RI) is not making a rising edge (logical 0 to logical 1) transition,
- And a close failure condition does not exist (Relay Word bit CF = 0),

then the CLOSE Relay Word bit can be asserted to logical 1 if any *one* of the following occurs:

- The serial communications port **CLOSE** command is executed,
- A reclosing relay open interval times out,
- Or SELOGIC control equation setting CL goes from logical 0 to logical 1 (rising edge transition).

Unlatch Close

If the CLOSE Relay Word bit is asserted at logical 1, it stays asserted at logical 1 until one of the following occurs:

- The unlatch close condition asserts (ULCL = logical 1),
- The circuit breaker closes (52A = logical 1),
- The reclose initiation condition (79RI) makes a rising edge (logical 0 to logical 1) transition,
- Or the Close Failure Timer times out (Relay Word bit CF = 1).

The Close Failure Timer is inoperative if setting CFD = 0. Then, the CLOSE Relay Word bit can be deasserted to logical 0 only if one of the following occurs:

- The unlatch close condition asserts (ULCL = logical 1),
- The circuit breaker closes (52A = logical 1),
- Or the reclose initiation condition (79RI) makes a rising edge (logical 0 to logical 1) transition.

Factory Settings Example

The factory settings for the close/reclose logic SELOGIC control equation settings are:

CL = **LB4**

ULCL = **TRIP**

52A = **IN1**

The factory setting for the Close Failure Timer setting is:

CFD = **60.000 cycles**

See the setting sheets in *Section 4: Setting the Relay* for setting ranges.

Set Close

SELOGIC control equation setting CL is set with local bit LB4. Local bit LB4 closes directly (operates as a manual close switch via the front panel). See *Local Control Switches on page 3.6* and *Section 6: Front-Panel Interface* for more information on local control.

Unlatch Close

SELOGIC control equation setting ULCL is set with the TRIP Relay Word bit. This prevents the CLOSE Relay Word bit from being asserted any time the TRIP Relay Word bit is asserted (TRIP takes priority). See *Trip Logic on page 3.19*.

SELOGIC control equation setting 52A is set with optoisolated input **IN1**. Input **IN1** is connected to a 52a circuit breaker auxiliary contact. Setting 52A operates on 52a circuit breaker auxiliary contact logic. When a closed circuit breaker condition is detected, the CLOSE Relay Word bit is deasserted to logical 0. Setting 52A can handle a 52a or 52b circuit breaker auxiliary contact connected to an optoisolated input (see *Optoisolated Inputs on page 3.4* for more 52A setting examples).

With setting CFD = 60.000 cycles, once the CLOSE Relay Word bit is asserted, it can remain asserted at logical 1 for no longer than a *maximum* of 60 cycles.

Defeat the Close Logic

If SELOGIC control equation setting 52A is set with numeral 0 (52A = 0), then the close logic is inoperable. Also, the reclosing relay is rendered nonexistent (see *Reclosing Relay on page 3.25*).

Program an Output Contact for Closing

In the factory settings, the resultant of the close logic in *Figure 3.14* is routed to output contact **OUT2** with the following SELOGIC control equation:

OUT2 = **CLOSE**

See *Output Contacts on page 3.43* for more information on programming output contacts.

Reclosing Relay

Note that the output of the reclosing relay logic (Reclosing Relay Open Interval Time-Out) is an input into the close logic in *Figure 3.14*. The CLOSE Relay Word bit can be assigned to an output contact and provide automatic reclosing, in addition to closing via the **CLOSE** command or the SELOGIC control equation setting CL. Up to four (4) automatic reclose attempts (shots) can be made.

Reclosing Relay States and General Operation

Figure 3.15 explains in general the different states of the reclosing relay and its operation.

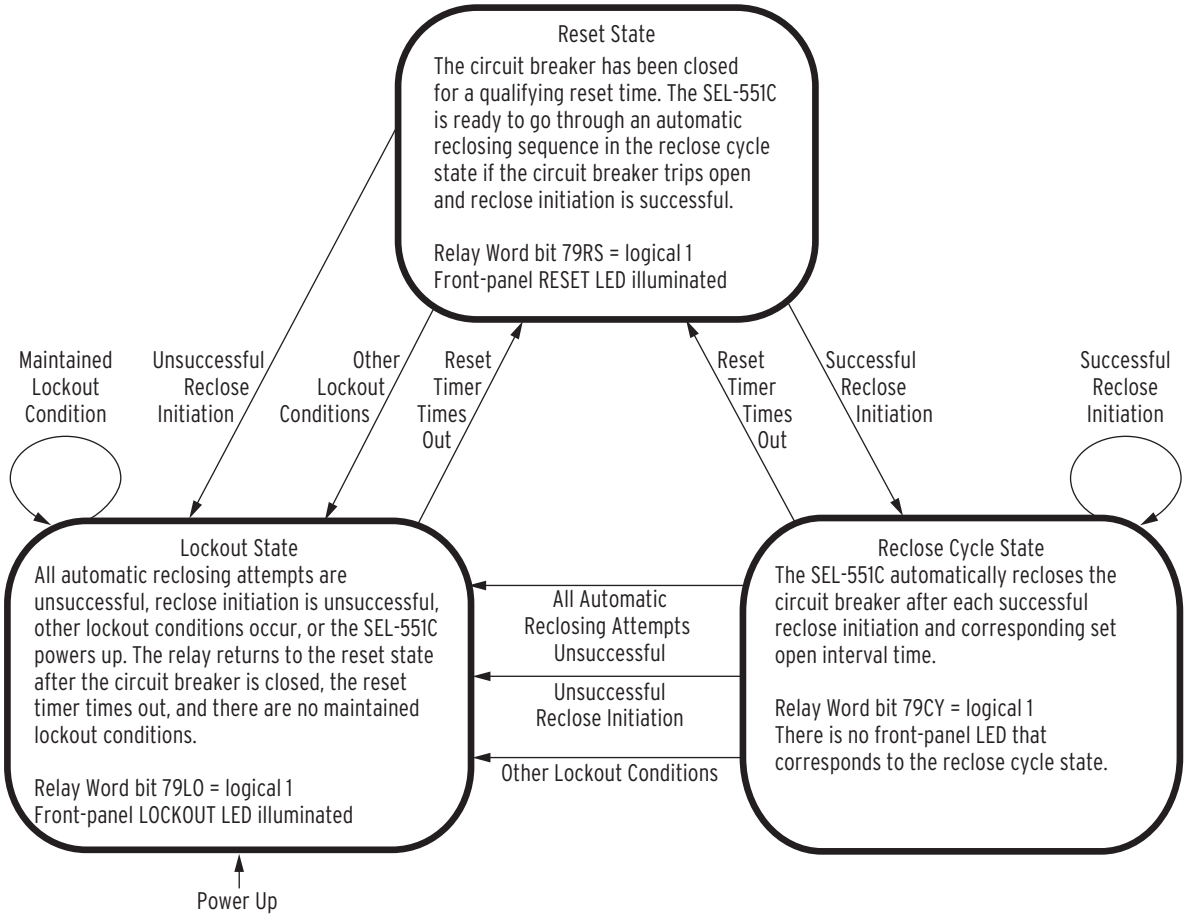

Figure 3.15 Reclosing Relay States and General Operation

Table 3.5 Relay Word Bit and Front-Panel Correspondence to Reclosing Relay States

Reclosing Relay State	Corresponding Relay Word Bit	Corresponding Front-Panel LED
Reset	79RS	RS
Reclose Cycle	79CY	None
Lockout	79LO	LO

The reclosing relay is in one and only one of these states (listed in *Table 3.5*) at any time. When in a given state, the corresponding Relay Word bit asserts to logical 1, and the LED illuminates. Automatic reclosing only takes place when the relay is in the Reclose Cycle State.

Lockout State

The reclosing relay goes to the Lockout State if any *one* of the following occurs:

- The shot counter is equal to or greater than last shot at time of reclose initiation (e.g., all automatic reclosing attempts are unsuccessful—see *Figure 3.16*).
- Reclose initiation is unsuccessful because of SELOGIC control equation setting 79RIS [see *Reclose Initiate and Reclose Initiate Supervision Settings (79RI and 79RIS, Respectively) on page 3.30*)].
- The circuit breaker opens without reclose initiation (e.g., an external trip).
- The shot counter is equal to or greater than last shot, and the circuit breaker is open [e.g., the shot counter is driven to last shot with SELOGIC control equation setting 79DLS while open interval timing is in progress. See *Drive-to-Lockout and Drive-to-Last Shot Settings (79DTL and 79DLS, Respectively) on page 3.32*)].
- The close failure timer (setting CFD) times out (see *Figure 3.14*).
- SELOGIC control equation setting 79DTL = logical 1 [see *Drive-to-Lockout and Drive-to-Last Shot Settings (79DTL and 79DLS, Respectively)*].
- Open Command (**OPE**) is executed and SELOGIC control equation setting 79RI = TRIP + …).
- A new reclose initiation occurs while the reclosing relay is timing on an open interval (e.g., flashover in the tank while breaker is open.)

Reclosing Relay States and Settings Changes

If a settings change is made, *all* of the following occur:

- The reclosing relay remains in the state it was in before the settings change,
- The shot counter is driven to last shot (last shot corresponding to the new settings; see discussion on last shot that follows),
- And the reset timer is loaded with reset time setting 79RSLD (see discussion on reset timing that follows).

If the relay happened to be in the Reclose Cycle State and was timing on an open interval before the settings change, the relay would be in the Reclose Cycle State after the settings change, but the relay would immediately go to the Lockout State. This is because the breaker is open, and the relay is at last shot after the settings change, and thus no more automatic reclosures are available.

If the breaker remains closed through the settings change, the reset timer times out on reset time setting 79RSLD after the settings change and goes to the Reset State (if it is not already in the Reset State), and the shot counter returns to shot = 0. If the relay happens to trip during this reset timing, the relay will immediately go to the Lockout State, because shot = last shot.

Existence or Nonexistence of the Reclosing Relay

If any one of the following reclosing relay settings are made:

- Open interval time setting 79OI1 = 0.000
- SELOGIC control equation setting 79RI = 0
- SELOGIC control equation setting 79RIS = 0

then the reclosing relay does not exist, and no automatic reclosing takes place. These settings are explained later in this section. See also the setting sheets in *Section 4: Setting the Relay*.

If the *reclosing relay does not exist*, the following also occur:

- All three reclosing relay state Relay Word bits (79RS, 79CY, and 79LO) are deasserted to logical 0 (see *Table 3.5*).
- All shot counter Relay Word bits (SH0, SH1, SH2, SH3, and SH4) are deasserted to logical 0 (the shot counter is explained later in this section).
- The front-panel LEDs **RS** and **LO** are extinguished.

NOTE: if the reclosing relay exists, but happens to be in the reclose cycle state, both the **RS** and **LO** LEDs are also extinguished.

Close Logic Can Still Operate When Reclosing Relay Is Nonexistent

If the reclosing relay is nonexistent, the close logic (see *Figure 3.14*) can still operate if SELOGIC control equation setting 52A (circuit breaker status) is set to something other than numeral 0. Making the setting 52A = 0 defeats the close logic *and* also renders the reclosing relay nonexistent.

For example, if 52A = IN1, a 52a circuit breaker auxiliary contact is connected to input IN1. If the reclosing relay does not exist, the close logic still operates, allowing closing to take place via the **CLOSE** command or SELOGIC control equation setting CL (close conditions, other than auto reclosing or **CLOSE** command). See *Close Logic on page 3.22* for more discussion on SELOGIC control equation settings 52A and CL. Also see *Optoisolated Inputs on page 3.4* for more discussion on SELOGIC control equation setting 52A.

Reclosing Relay Timer Settings

The open interval and reset timer factory settings are:

Timer Setting	Factory setting (in cycles)	Definition
79OI1	30.000	open interval 1 time
79OI2	600.000	open interval 2 time
79OI3	0.000	open interval 3 time
79OI4	0.000	open interval 4 time
79RSD	1800.000	reset time from reclose cycle state
79RSLD	300.000	reset time from lockout state

The operation of these timers is affected by SELOGIC control equation settings discussed later in this section. Also see the setting sheets in *Section 4: Setting the Relay*.

Open Interval Timers

If an open interval time is set to zero, then that open interval time is not operable, *and* neither are the open intervals times that follow it.

In the above factory settings, the open interval time setting 79OI3 is the first open interval time setting set equal to zero:

79OI3 = **0.000 cycles**

Thus, open interval times 79OI3 and 79OI4 are not operable. In the factory settings, both open interval times 79OI3 and 79OI4 are set to zero. But if the settings were:

79OI3 = **0.000 cycles**

79OI4 = **900.000 cycles** (set to some value other than zero)

open interval time 79OI4 would still be inoperative, because a preceding open interval time is set to zero (i.e., 79OI3 = 0.000).

If open interval time setting 79OI1 is set to zero (79OI1 = 0.000 cycles), no open interval timing takes place, and the reclosing relay is rendered nonexistent.

The open interval timers time consecutively; they do not have the same beginning time reference point. In the above factory settings, the open interval time setting 79OI1 times first. If the subsequent first reclosure is not successful, then open interval time setting 79OI2 times. If the subsequent second reclosure is not successful, the relay goes to the Lockout State. See the example time-line *Figure 3.16*.

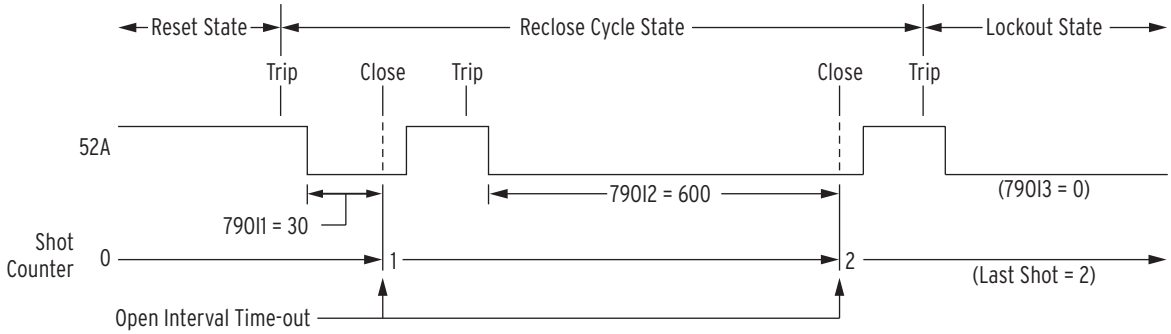

Figure 3.16 Reclosing Sequence From Reset to Lockout With Factory Settings

Determination of Number of Reclosures (Last Shot)

The number of reclosures (last shot) is equal to the number of open interval time settings that precede the first open interval time setting set equal to zero.

In the above factory settings, two set open interval times precede the third open interval time, which is set to zero (79OI3 = 0.000):

79OI1 = **30.000**

79OI2 = **600.000**

79OI3 = **0.000**

For this example:

Number of reclosures (last shot) = 2 = the number of set open interval times that precede the first open interval set to zero.

Reset Timer

The reset timer qualifies breaker closure before taking the relay to the reset state from the reclose cycle state or the lockout state. Breaker status is determined by the SELOGIC control equation setting 52A (see preceding *Close Logic on page 3.22* and *Optoisolated Inputs on page 3.4* for more discussion on SELOGIC Control Equation setting 52A).

Setting 79RSD

Qualifies closures in the Reclose Cycle State. These closures would usually be automatic reclosures resulting from open interval time-out.

It is also the reset time used in sequence coordination schemes [see *Sequence Coordination (79SEQ) on page 3.37*].

Setting 79RSLD

Qualifies closures in the Lockout State. These closures would usually be manual closures, external to the relay, via the **CLOSE** command or the SELOGIC control equation setting CL (see *Figure 3.14*).

Setting 79RSLD is also the reset timer used when the relay powers up or has its settings changed (see *Reclosing Relay States and General Operation on page 3.25*).

Typically, setting 79RSLD is set less than setting 79RSD. Setting 79RSLD emulates reclosing relays with motor-driven timers that have a relatively short reset time from the lockout position to the reset position.

The setting of 79RSD and 79RSLD is independent (setting 79RSLD can even be set greater than setting 79RSD, if desired). SELOGIC control equation setting 79BRS (block reset timing) can be set to control reset timing [see *Block Reset Timing (79BRS) on page 3.35*].

Reclosing Relay Shot Counter

Refer to *Figure 3.16*.

The shot counter increments for each reclose operation. For example, when the relay is timing on the first open interval, 79OI1, it is at shot = 0. When the open interval times out, the shot counter increments to shot = 1 and so forth for the set open intervals that follow. The shot counter cannot increment beyond the last shot for automatic reclosing (see preceding discussion on last shot). The shot counter resets back to shot = 0 when the reclosing relay returns to the Reset State.

Table 3.6 Shot Counter Correspondence to Relay Word Bits and Open Interval Times

Shot	Corresponding Relay Word Bit	Corresponding Open Interval
0	SH0	79OI1
1	SH1	79OI2
2	SH2	79OI3
3	SH3	79OI4
4	SH4	

When the shot counter is at a particular shot value (e.g., shot = 2), the corresponding Relay Word bit asserts to logical 1 (e.g., SH2 = logical 1).

The shot counter also increments for sequence coordination operation. The shot counter can increment beyond the last shot for sequence coordination [see *Sequence Coordination (79SEQ)*].

Reclosing Relay SELOGIC Control Equation Settings Overview

SELOGIC Control Equation Setting	Factory Setting	Definition
79RI	TRIP	reclose initiate
79RIS	IN1	reclose initiate supervision
79DTL	!LB1+LB3	drive-to-lockout
79DLS	79LO	drive-to-last shot
79SKP	50P2*SH0	skip shot
79STL	TRIP	stall open interval timing
79BRS	(51P1+51G1)*(79RS+79CY)	block reset timing
79SEQ	0	sequence coordination

These settings are discussed in detail in the following text.

Reclose Initiate and Reclose Initiate Supervision Settings (79RI and 79RIS, Respectively)

The reclose initiate setting 79RI is a rising-edge detect setting. The reclose initiate supervision setting 79RIS supervises setting 79RI. When setting 79RI senses a rising edge (logical 0 to logical 1 transition), setting 79RIS has to be at logical 1 (79RIS = logical 1) in order for open interval timing to be initiated.

If 79RIS = logical 0 when setting 79RI senses a rising edge (logical 0 to logical 1 transition), the relay goes to the Lockout State.

Factory Settings Example

With factory settings:

79RI = **TRIP**

79RIS = **IN1**

the transition of the TRIP Relay Word bit from logical 0 to logical 1 initiates open interval timing only if the IN1 Relay Word bit is at logical 1 (IN1 = logical 1). Input **IN1** is connected to a 52a breaker auxiliary contact and, thus, the circuit breaker has to be closed when the TRIP Relay Word bit asserts in order to initiate open interval timing.

If the circuit breaker is open (IN1 = logical 0) when the TRIP Relay Word bit asserts (logical 0 to logical 1 transition), the relay goes to the Lockout State. This helps prevent reclose initiation for such conditions as a flashover in the tank of an open circuit breaker.

Additional Settings Example 1

The preceding settings example initiates open interval timing on rising-edge of the TRIP Relay Word bit. The following is an example of reclose initiation on the opening of the circuit breaker.

Input **IN1** is connected to a 52a circuit breaker auxiliary contact.

With setting:

79RI = **!IN1**

the transition of the IN1 Relay Word bit from logical 1 to logical 0 (breaker opening) initiates open interval timing. Setting 79RI looks for a logical 0 to logical 1 transition, thus Relay Word bit IN1 is inverted in the 79RI setting [!IN1 = NOT(IN1)].

The reclose initiate supervision setting 79RIS supervises setting 79RI. With settings:

79RI = **!IN1**

79RIS = **TRIP**

the transition of the IN1 Relay Word bit from logical 1 to logical 0 initiates open interval timing only if the TRIP Relay Word bit is at logical 1 (TRIP = logical 1). Thus, the TRIP Relay Word bit has to be asserted when the circuit breaker opens in order to initiate open interval timing. With a long enough setting of the Minimum Trip Duration Timer (TDURD), the TRIP Relay Word bit will still be asserted to logical 1 when the circuit breaker opens (see *Figure 3.13*).

If the TRIP Relay Word bit is at logical 0 (TRIP = logical 0) when the circuit breaker opens (logical 1 to logical 0 transition), the relay goes to the Lockout State. This helps prevent reclose initiation for circuit breaker openings caused by trips external to the relay.

Other Settings Considerations

In the preceding factory setting example, the reclose initiate supervision setting (79RIS) includes input **IN1**, that is connected to a 52a breaker auxiliary contact.

79RIS = **IN1**

If a 52b breaker auxiliary contact is connected to input **IN1**, the reclose initiate supervision setting (79RIS) would be set as follows:

79RIS = **!IN1**

In the preceding additional setting example 1, the reclose initiate setting (79RI) includes input **IN1**, that is connected to a 52a breaker auxiliary contact.

79RI = **!IN1**

If a 52b breaker auxiliary contact is connected to input **IN1**, the reclose initiate setting (79RI) would be set as follows:

79RI = **IN1**

If no reclose initiate supervision is desired, make the following setting:

79RIS = **1** (numeral 1)

Setting 79RIS = logical 1 at all times. Any time a logical 0 to logical 1 transition is detected by setting 79RI, open interval timing will be initiated (unless prevented by some other means).

As discussed previously, if *any one* of the following settings are made:

79RI = **0** (numeral 0)

79RIS = **0** (numeral 0)

the reclosing relay does not exist.

Drive-to-Lockout and Drive-to-Last Shot Settings (79DTL and 79DLS, Respectively)

When 79DTL = logical 1, the reclosing relay goes to the Lockout State (Relay Word bit 79LO = logical 1) and the front-panel **LO** (Lockout) LED illuminates.

When 79DLS = logical 1, the reclosing relay goes to the last shot, if the shot counter is not at a shot value greater than or equal to the calculated last shot (see preceding discussions on last shot determination and the shot counter).

Factory Settings Example

The drive-to-lockout factory setting is:

79DTL = **!LB1 + LB3**

Local bit LB1 is set to operate as a reclose enable switch (see *Local Control Switches on page 3.6*). When Relay Word bit LB1 = logical 1 (reclosing enabled), the relay is not driven to the Lockout State (assuming local bit LB3 = logical 0, too):

!LB1 = **!(logical 1)** = NOT(logical 1) = logical 0

79DTL = **!LB1 + LB3** = (logical 0) + LB3 = LB3

When Relay Word bit LB1 = logical 0 (reclosing disabled), the relay is driven to the Lockout State:

!LB1 = **!(logical 0)** = NOT(logical 0) = logical 1

79DTL = **!LB1 + LB3** = (logical 1) + LB3 = logical 1

Local bit LB3 is set to operate as a manual trip switch (see *Local Control Switches* and *Trip Logic on page 3.19*). When Relay Word bit LB3 = logical 0 (no manual trip), the relay is not driven to the Lockout State (assuming local bit LB1 = logical 1, too):

79DTL = **!LB1 + LB3** = NOT(LB1) + (logical 0) = NOT(LB1)

When Relay Word bit LB3 = logical 1 (manual trip), the relay is driven to the Lockout State:

79DTL = **!LB1 + LB3** = NOT(LB1) + (logical 1) = logical 1

The drive-to-last shot factory setting is:

79DLS = **79LO**

Two open intervals are also set in the factory settings, resulting in last shot = 2. Anytime the relay is in the lockout state (Relay Word bit 79LO = logical 1), the relay is driven to last shot (if the shot counter is not already at a shot value greater than or equal to shot = 2):

79DLS = **79LO** = logical 1

Thus, if local bit LB1 (reclose enable switch) is in the “disable reclosing” position (LB1 = logical 0) or local bit LB3 (manual trip switch) is operated, then the relay is driven to the Lockout State (by setting 79DTL) and subsequently last shot (by setting 79DLS).

Additional Settings Example 1

The preceding drive-to-lockout factory settings example drives the relay to the Lockout State immediately when the reclose enable switch (local bit LB1) is put in the "reclosing disabled" position (Relay Word bit LB1 = logical 0):

79DTL = **!LB1 + ...** = NOT(LB1) + ... = NOT(logical 0) + ... = logical 1

To disable reclosing, but not drive the relay to the Lockout State until the relay trips, make settings similar to the following:

79DTL = **!LB1 * TRIP + ...**

Additional Settings Example 2

To drive the relay to the Lockout State for fault current above a certain level when tripping (e.g., level of phase instantaneous overcurrent element 50P3), make settings similar to the following:

79DTL = **TRIP * 50P3 + ...**

Other Settings Considerations

If no special drive-to-lockout or drive-to-last shot conditions are desired, make the following settings:

79DTL = **0** (numeral 0)

79DLS = **0** (numeral 0)

With settings 79DTL and 79DLS inoperative, the SEL-551C will still end up in the Lockout State (and at last shot) if an entire automatic reclose sequence is unsuccessful.

Overall, settings 79DTL or 79DLS are needed to take the SEL-551C to the Lockout State (or to last shot) for immediate circumstances.

Skip Shot and Stall Open Interval Timing Settings (79SKP and 79STL, Respectively)

The skip shot setting 79SKP causes a reclose shot to be skipped. Thus, an open interval time is skipped, and the next open interval time is used instead.

If 79SKP = logical 1 at the instant of successful reclose initiation (see preceding discussion on settings 79RI and 79RIS), the relay increments the shot counter to the next shot and then loads the open interval time corresponding to the new shot (see *Table 3.6*). If the new shot turns out to be the "last shot," no open interval timing takes place, and the relay goes to the Lockout State if the circuit breaker is open (see preceding discussion on last shot and shot counter).

After successful reclose initiation, open interval timing does not start until allowed by the stall open interval timing setting 79STL. If 79STL = logical 1, open interval timing is stalled. If 79STL = logical 0, open interval timing can proceed.

If an open interval time has not yet started timing (79STL = logical 1 still), the 79SKP setting is still processed. In such conditions (open interval timing has not yet started timing), if 79SKP = logical 1, the relay increments the shot counter to the next shot and then loads the open interval time corresponding to the new shot (see *Table 3.6*). If the new shot turns out to be the "last shot," no open interval timing takes place, and the relay goes to the Lockout State if the circuit breaker is open (see preceding discussion on last shot and shot counter).

If the relay is in the middle of timing on an open interval and 79STL changes state to 79STL = logical 1, open interval timing stops where it is. If 79STL changes state back to 79STL = logical 0, open interval timing resumes where it left off.

Factory Settings Example

The skip shot factory setting is:

79SKP = **50P2 * SH0**

If shot = 0 (Relay Word bit SH0 = logical 1) and phase current is above the phase instantaneous overcurrent element 50P2 threshold (Relay Word bit 50P2 = logical 1), at the instant of successful reclose initiation, the shot counter is incremented from shot = 0 to shot = 1. Then, the first open interval time (setting 79OI1) is skipped, and the relay times on the second open interval time (setting 79OI2) instead.

Shot	Corresponding Relay Word Bit	Corresponding Open Interval	Open Interval Factory Setting
0	SH0	79OI1	30 cycles
1	SH1	79OI2	600 cycles

Note that the first open interval time (setting 79OI1) is a short time, while the following second open interval time (setting 79OI2) is significantly longer. For a high magnitude fault (greater than the phase instantaneous overcurrent element 50P2 threshold), the first open interval time is skipped, and open interval timing proceeds on the following second open interval time.

Once the shot is incremented to shot = 1, Relay Word bit SH0 = logical 0 and then setting 79SKP = logical 0, regardless of Relay Word bit 50P2.

The stall open interval timing factory setting is:

79STL = **TRIP**

After successful reclose initiation, open interval timing does not start as long as the trip condition is present (Relay Word bit TRIP = logical 1). As discussed previously, if an open interval time has not yet started timing (79STL = logical 1 still), the 79SKP setting is still processed. Once the trip condition goes away (Relay Word bit TRIP = logical 0), open interval timing can proceed.

Additional Settings Example

If the relay is used on a feeder with a cogenerator, it is desirable that the reclosing does not take place into a line energized by an islanded generator. A potential transformer and voltage relay are installed on the line side of the circuit breaker, and a contact from the undervoltage relay is connected to input **IN2** of the SEL-551C.

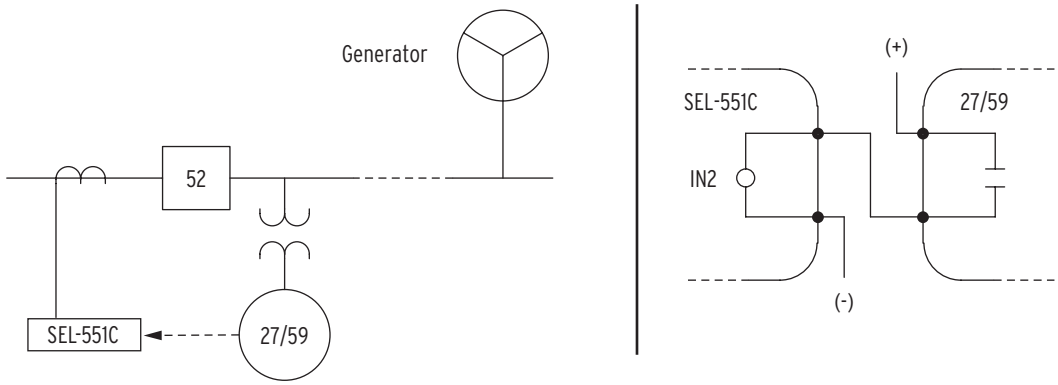

Figure 3.17 Voltage Relay (27/59) Provides Reclose Block Signal to SEL-551C

The contact from the voltage relay indicates the presence or absence of voltage. If line voltage is present, open interval timing is stalled. If line voltage is not present, open interval timing proceeds. This is realized with the following setting:

79STL = **IN2**

or

79STL = **!IN2**

depending on the nature of the contact from the voltage relay.

Other Settings Considerations

If no special skip shot or stall open interval timing conditions are desired, make the following settings:

79SKP = **0** (numeral 0)

79STL = **0** (numeral 0)

Block Reset Timing (79BRS)

The block reset timing setting 79BRS keeps the reset timer from timing. Depending on the reclosing relay state, the reset timer can be loaded with either reset time:

79RSD (Reset Time from Reclose Cycle)

or

79RSLD (Reset Time from Lockout)

Depending on how setting 79BRS is set, none, one, or both of these reset times can be controlled. If the reset timer is timing and then 79BRS asserts to:

79BRS = **logical 1**

reset timing is stopped and will not start timing again until 79BRS deasserts to:

79BRS = **logical 0**

When reset timing starts again, it will be with a fully-loaded reset time. Thus, successful reset timing has to be continuous.

Factory Settings Example

The block reset timing setting is:

79BRS = **(51P1 + 51G1) * (79RS + 79CY)**

Relay Word bits 79RS and 79CY correspond to the Reset State and the Reclose Cycle State, respectively. The reclosing relay is in one and only one of the three reclosing relay states at any one time (see *Figure 3.15* and *Table 3.5*).

When the relay is in the Lockout State, Relay Word bits 79RS and 79CY are deasserted to logical 0. Thus, the factory 79BRS setting has no effect when the relay is in the Lockout State. When a circuit breaker is closed from lockout, there is usually cold load inrush that would momentarily pick up a time-overcurrent element [e.g., phase time-overcurrent element 51P1T pickup (51P1) asserts momentarily]. But, this assertion of pickup 51P1 has no effect on reset timing because the relay is in the Lockout State (79RS = logical 0, 79CY = logical 0). The relay will time immediately on reset time 79RSLD and take the relay from the Lockout State to the Reset State with no additional delay because 79BRS is deasserted to logical 0.

When the relay is not in the Lockout State, either Relay Word bit 79RS or 79CY is asserted to logical 1. Thus, the factory 79BRS setting can function to block reset timing if time-overcurrent pickup 51P1 or 51G1 is picked up. This helps prevent repetitive “trip-reclose” cycling.

Additional Settings Example 1

The block reset timing setting can be set as:

79BRS = **(51P1 + 51G1) * 79CY**

Relay Word bit 79CY corresponds to the Reclose Cycle State. The reclosing relay is in one of the three reclosing relay states at any one time (see *Figure 3.15* and *Table 3.5*).

When the relay is in the Reset or Lockout States, Relay Word bit 79CY is deasserted to logical 0. Thus, the 79BRS setting has no effect when the relay is in the Reset or Lockout States. When a circuit breaker is closed from lockout, there could be cold load inrush current that momentarily picks up a time-overcurrent element [e.g., phase time-overcurrent element 51P1T pickup (51P1) asserts momentarily]. But, this assertion of pickup 51P1 has no effect on reset timing because the relay is in the Lockout State (79CY = logical 0). The relay will time immediately on reset time 79RSLD and take the relay from the Lockout State to the Reset State with no additional delay because 79BRS is deasserted to logical 0.

When the relay is in the Reclose Cycle State, Relay Word bit 79CY is asserted to logical 1. Thus, the factory 79BRS setting can function to block reset timing if time-overcurrent pickup 51P1 or 51G1 is picked up while the relay is in the Reclose Cycle State. This helps prevent repetitive “trip-reclose” cycling.

Additional Settings Example 2

If the block reset timing setting is:

79BRS = **51P1 + 51G1**

then reset timing is blocked if time-overcurrent pickup 51P1 or 51G1 is picked up, regardless of the reclosing relay state.

Sequence Coordination (79SEQ)

The sequence coordination setting 79SEQ keeps the SEL-551C in step with a downstream line recloser in a sequence coordination scheme, which prevents overreaching SEL-551C overcurrent elements from tripping for faults beyond the line recloser. This is accomplished by incrementing the shot counter and supervising overcurrent elements with resultant shot counter elements.

In order for the sequence coordination setting 79SEQ to increment the shot counter, both the following conditions must be true:

- No trip present (Relay Word bit TRIP = logical 0)
- Circuit breaker closed (SELOGIC control equation setting 52A = logical 1, effectively)

The sequence coordination setting 79SEQ is usually set with some overcurrent element pickups. If the above two conditions are both true and a set overcurrent element pickup asserts for at least 1.25 cycles and then deasserts, the shot counter increments by one count. This assertion/ deassertion indicates that a downstream device (e.g., line recloser—see *Figure 3.18*) has operated to clear a fault. Incrementing the shot counter keeps the SEL-551C "in step" with the downstream device, as is shown in the following *Additional Settings Example 1* and *Additional Settings Example 2 on page 3.39*.

Every time a sequence coordination operation occurs, the shot counter is incremented, and the reset timer is loaded up with reset time 79RSD. Sequence coordination can increment the shot counter beyond last shot, but no further than shot = 4. The shot counter returns to shot = 0 after the reset timer times out. Reset timing is subject to the previously discussed SELOGIC control equation setting 79BRS.

Sequence coordination operation does not change the reclosing relay state. For example, if the relay is in the Reset State and there is a sequence coordination operation, it remains in the Reset State.

Factory Settings Example

Sequence coordination is not enabled in the factory settings:

79SEQ = **0**

Additional Settings Example 1

With sequence coordination setting:

79SEQ = **79RS * 51P1**

sequence coordination is operable only when the relay is in the Reset State (79RS = logical 1).

Refer to *Figure 3.18*.

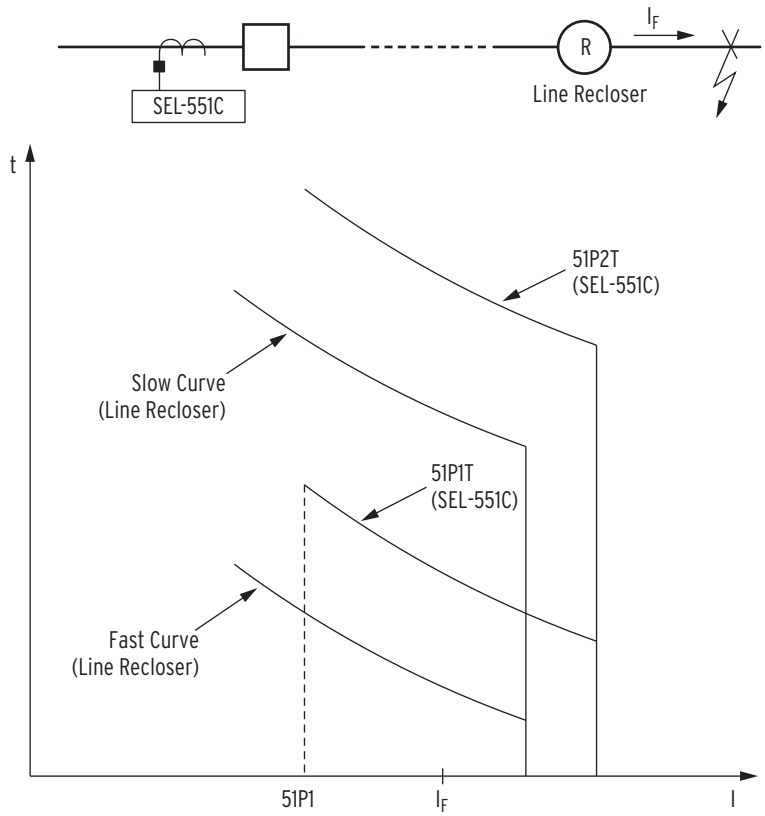

Figure 3.18 Sequence Coordination Between the SEL-551C and a Line Recloser

Presume that the line recloser is set to operate twice on the fast curve and then twice on the slow curve. The slow curve is allowed to operate after two fast curve operations because the fast curves are then inoperative for tripping. The SEL-551C phase time-overcurrent element 51P1T is coordinated with the line recloser fast curve. The SEL-551C phase time-overcurrent element 51P2T is coordinated with the line recloser slow curve.

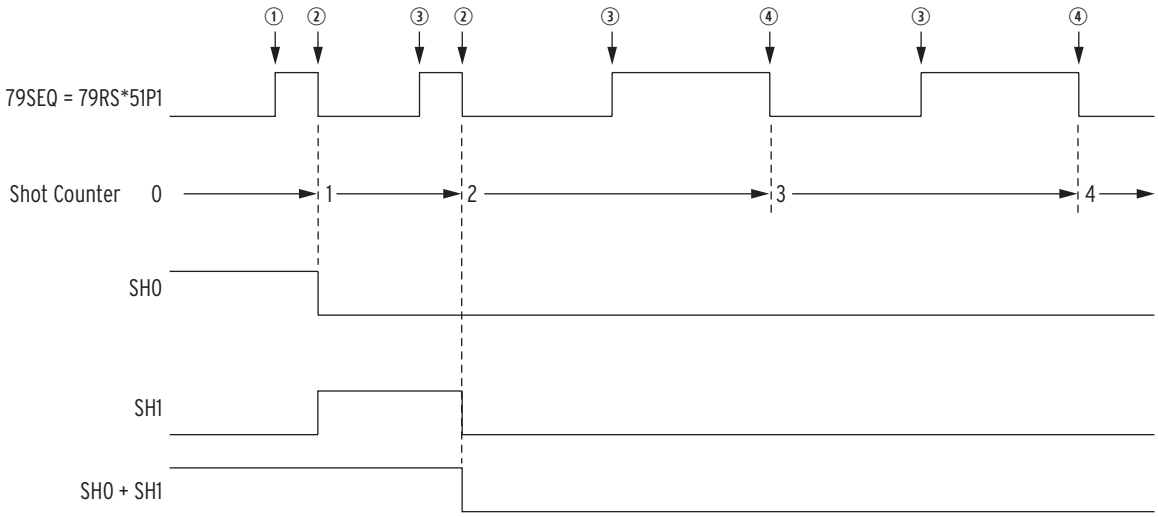

① Fault occurs beyond line recloser; ② fault cleared by line recloser fast curve; ③ line recloser recloses into fault; ④ fault cleared by line recloser slow curve.

Figure 3.19 Operation of SEL-551C Shot Counter for Sequence Coordination With Line Recloser (Additional Settings Example 1)

If the SEL-551C is in the Reset State (79RS = logical 1) and then a permanent fault beyond the line recloser occurs (fault current I_F in *Figure 3.18*), the line recloser fast curve operates to clear the fault. The SEL-551C also sees the fault. The phase time-overcurrent pickup 51P1 asserts and then deasserts without tripping, incrementing the SEL-551C shot counter from:

shot = 0 to shot = 1

When the line recloser recloses its circuit breaker, the line recloser fast curve operates again to clear the fault. The SEL-551C also sees the fault again. The phase time-overcurrent pickup 51P1 asserts and then deasserts without tripping, incrementing the SEL-551C shot counter from:

shot = 1 to shot = 2

The line recloser fast curve is now disabled after operating twice. When the line recloser recloses its circuit breaker, the line recloser slow curve operates to clear the fault. The SEL-551C does not operate on its faster-set phase time-overcurrent element 51P1T (51P1T is "below" the line recloser slow curve) because the shot counter is now at shot = 2. For this sequence coordination scheme, the SEL-551C SELOGIC control equation trip equation is:

TR = **51P1T * (SH0 + SH1) + 51P2T**

NOTE: Sequence coordination can increment the shot counter beyond last shot (last shot = 2 in this factory setting example), but no further than shot = 4.

The following Example 2 limits sequence coordination shot counter incrementing.

With the shot counter at shot = 2, Relay Word bits SH0 (shot = 0) and SH1 (shot = 1) are both deasserted to logical 0. This keeps the 51P1T phase time-overcurrent element from tripping. The 51P1T phase time-overcurrent element is still operative and its pickup (51P1) can still assert and then deassert, thus continuing the sequencing of the shot counter to shot = 3, etc. The 51P1T phase time-overcurrent element cannot cause a trip because shot ≥ 2 and SH0 and SH1 both are deasserted to logical 0.

The shot counter returns to shot = 0 after the reset timer (loaded with reset time 79RSD) times out.

Additional Settings Example 2

Review preceding *Additional Settings Example 1 on page 3.37*.

Assume that the line recloser in *Figure 3.18* is set to operate twice on the fast curve and then twice on the slow curve for faults beyond the line recloser.

Assume that the SEL-551C is set to operate once on 51P1T and then twice on 51P2T for faults between the SEL-551C and the line recloser. This results in the following trip setting:

TR = **51P1T * (SH0) + 51P2T**

This requires that two open interval settings be made (see *Figure 3.16*). This corresponds to the last shot being:

last shot = 2

If the sequence coordination setting is:

79SEQ = **79RS * 51P1**

and there is a permanent fault beyond the line recloser, the shot counter of the SEL-551C will increment all the way to shot = 4 (see *Figure 3.19*). If there is a coincident fault between the SEL-551C and line recloser, the SEL-551C will trip and go to the Lockout State. Any time the shot counter is at a value equal to or greater than last shot and the relay trips, it goes to the Lockout State.

To avoid this problem make the following sequence coordination setting:

79SEQ = **79RS * 51P1 * SH0**

Refer to *Figure 3.20*.

If the SEL-551C is in the Reset State (79RS = logical 0) with the shot counter reset (shot = 0; SH0 = logical 1) and then a permanent fault beyond the line recloser occurs (fault current I_F in *Figure 3.18*), the line recloser fast curve operates to clear the fault. The SEL-551C also sees the fault. The phase time-overcurrent pickup 51P1 asserts and then deasserts without tripping, incrementing the relay shot counter from:

shot = 0 to shot = 1

Now the SEL-551C cannot operate on its faster-set phase time-overcurrent element 51P1T because the shot counter is at shot = 1 (SH0 = logical 0):

TR = **51P1T * (SH0) + 51P2T** = 51P1T * (logical 0) + 51P2T = 51P2T

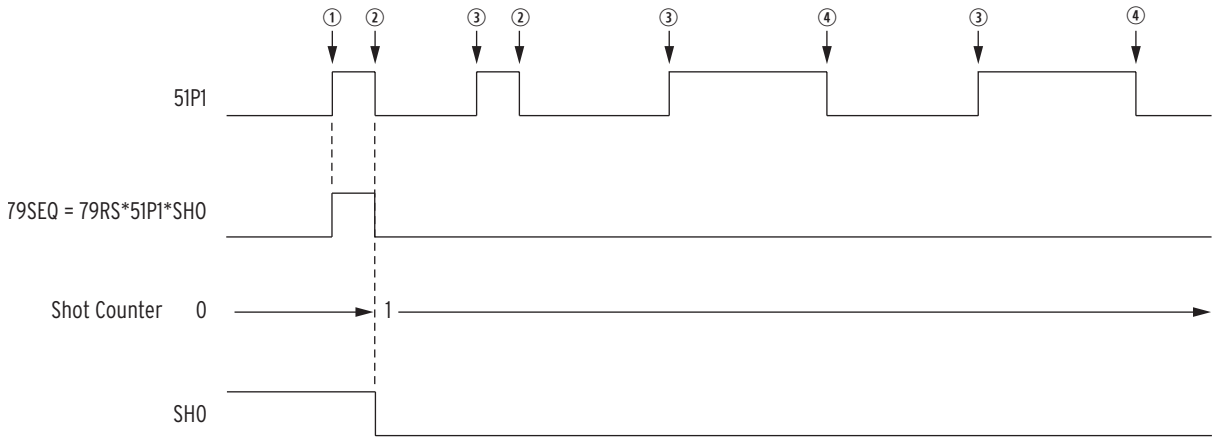

① Fault occurs beyond line recloser; ② fault cleared by line recloser fast curve; ③ line recloser recloses into fault; ④ fault cleared by line recloser slow curve.

Figure 3.20 Operation of SEL-351 Relay Shot Counter for Sequence Coordination With Line Recloser (Additional Setting Example 2)

The line recloser continues to operate for the permanent fault beyond it, but the SEL-551C shot counter does not continue to increment. Sequence coordination setting 79SEQ is effectively disabled by the shot counter incrementing from shot = 0 to shot = 1.

79SEQ = 7**9RS * 51P1 * SH0** = 79RS * 51P1 * (logical 0) = logical 0

The shot counter stays at shot = 1.

Thus, if there is a coincident fault between the SEL-551C and the line recloser, the SEL-551C will operate on 51P2T and then reclose once, instead of going straight to the Lockout State (shot = 1 < last shot = 2).

As stated earlier, the reset time setting 79RSD takes the shot counter back to shot = 0 after a sequence coordination operation increments the shot counter. Make sure that reset time setting 79RSD is set long enough to maintain the shot counter at shot = 1 as shown in *Figure 3.20*.

SELOGIC Control Equation Variables/Timers

Fourteen SELOGIC Variables (SV1–SV14) are available. Ten of these SELOGIC Variables have timer outputs, (SV5T–SV14T) (see *Figure 3.21*).

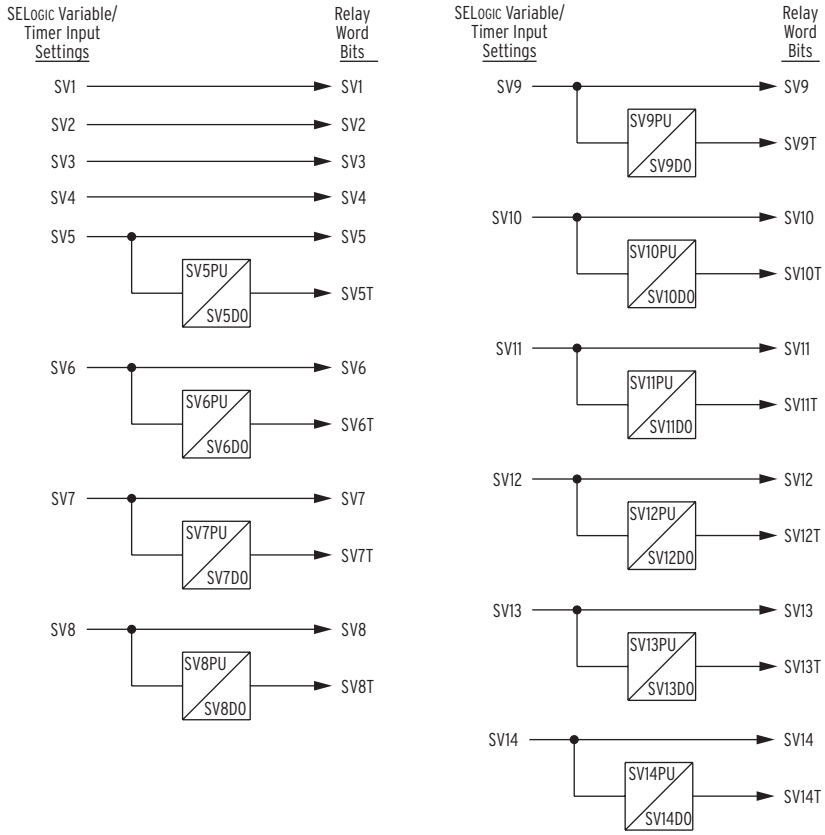

Figure 3.21 SELOGIC Control Equation Variables/Timers

Factory Settings Example

In the factory SELOGIC control equation settings, a SELOGIC Variable Timer is used for a simple breaker failure scheme:

SV5 = **TRIP**

The TRIP Relay Word bit is run through a timer for breaker failure timing. Timer pickup setting SV5PU is set to the breaker failure time (SV5PU = 12 cycles). Timer dropout setting SV5DO is set for a two cycle dropout (SV5DO = 2 cycles). The output of the timer (Relay Word bit SV5T) operates output contact **OUT3**.

OUT3 = **SV5T**

NOTE: The following SELOGIC Variable Timer examples make use of output contacts. Output Contacts on page 3.43 shows what output contacts are available in the SEL-551C Relay.

Additional Settings Example

Another application idea is dedicated breaker failure protection (see *Figure 3.22*):

SV6 = **IN1** (breaker failure initiate)

SV7 = **(SV7 + IN1) * (50P1 + 50N1)**

OUT1 = **SV6T** (retrip)

OUT2 = **SV7T** (breaker failure trip)

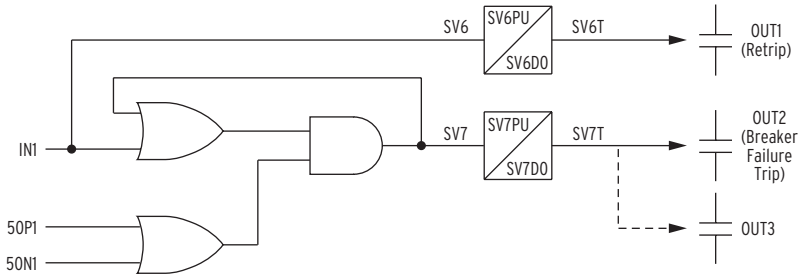

Figure 3.22 Dedicated Breaker Failure Scheme Created With SELogic Variables/Timers

Note that the above SELogic control equation setting SV7 creates a seal-in logic circuit (as shown in *Figure 3.22*) by virtue of SELogic control equation setting SV7 being set equal to Relay Word bit SV7:

SV7 = **(SV7 + IN1) * (50P1 + 50N1)**

Optoisolated input **IN1** functions as a breaker failure initiate input. Phase instantaneous overcurrent element 50P1 and neutral ground instantaneous overcurrent element 50N1 function as fault detectors.

Timer pickup setting SV6PU provides retrip delay, if desired (can be set to zero). Timer dropout setting SV6DO holds the retrip output (output contact **OUT1**) closed for extra time if needed after the breaker failure initiate signal (IN1) goes away.

Timer pickup setting SV7PU provides breaker failure timing. Timer dropout setting SV7DO holds the breaker failure trip output (output contact **OUT2**) closed for extra time if needed after the breaker failure logic unlatches (fault detectors 50P1 and 50N1 drop out).

Note that *Figure 3.22* suggests the option of having output contact **OUT3** operate as an additional breaker failure trip output. This is done by making the following SELogic control equation settings:

OUT3 = **SV7T** (breaker failure trip)

Output Contacts

SELOGIC control equation settings OUT1–OUT3 control Relay Word bits OUT1–OUT3, respectively. Relay Word bits OUT1–OUT3 in turn control output contacts **OUT1** through **OUT3**, respectively. See *Figure 3.23* for the output contacts available with the SEL-551C.

Factory Settings Example

In the factory SELOGIC control equation settings, three output contacts are used:

OUT1 = **TRIP** (overcurrent tripping/manual tripping; see *Trip Logic on page 3.19*)

OUT2 = **CLOSE** (automatic reclosing/manual closing; see *Close Logic on page 3.22*)

OUT3 = **!(SALARM + HALARM)** (programmable alarm conditions)

Figure 1.2 shows the factory configuration of the output contacts for the SEL-551C Relay.

Operation of Output Contacts for Different Output Contact Types

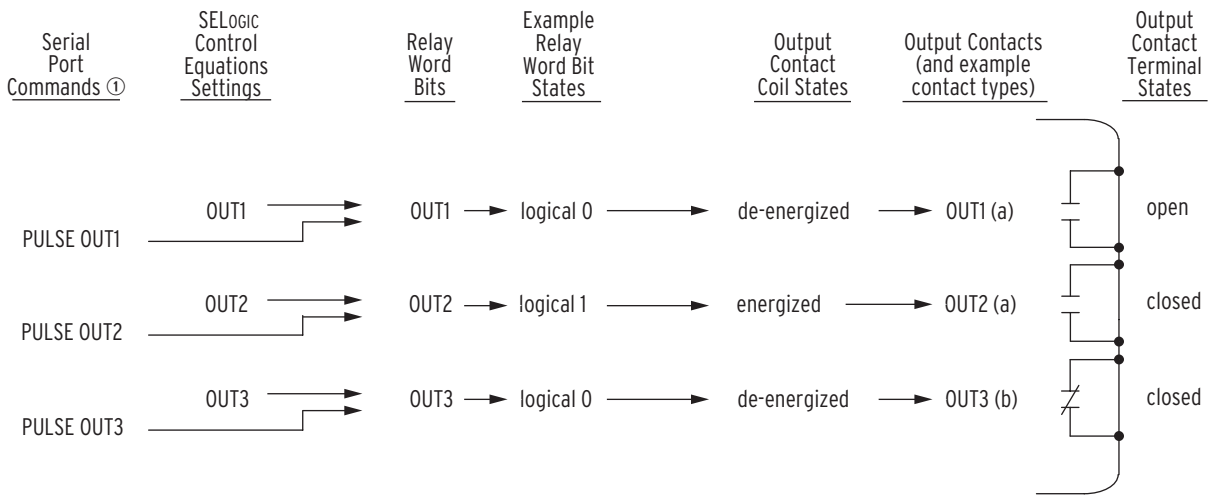

① **PULSE** command is also available via the front panel (**{CNTRL}** pushbutton, `output contact testing` option). Execution of the **PULSE** command results in a logical 1 input into the above logic.

Figure 3.23 Logic Flow for Example SEL-551C Output Contact Operation

Output Contacts OUT1 Through OUT3

Refer to *Figure 3.23*.

The execution of the serial port command **PULSE *n*** (*n* = **OUT1–OUT3**) asserts the corresponding Relay Word bit (OUT1–OUT3) to logical 1. The assertion of SELOGIC control equation setting OUT*m* (*m* = 1–3) to logical 1 also asserts the corresponding Relay Word bit OUT*m* (*m* = 1–3) to logical 1.

The assertion of Relay Word bit OUT*m* (*m* = 1–3) to logical 1 causes the energization of the corresponding output contact OUT*m* coil. Depending on the output contact type (a or b), the output contact closes or opens as demonstrated in *Figure 3.23*. An a-type output contact is open when the output contact coil is de-energized and closed when the output contact coil is energized. A b-type output contact is closed when the output contact coil is de-energized and open when the output contact coil is energized.

Notice in *Figure 3.23* that all four possible combinations of output contact coil states (energized or de-energized) and output contact types (a or b) are demonstrated.

Programmable Alarm Output Contact

Refer to *Figure 1.2* and *Figure 3.23*. From the factory, output contact **OUT3** is programmed as an alarm contact:

OUT3 = **!(SALARM + HALARM)**

See *Table 4.4* and *Table 8.3* for more information on the operation of Relay Word bits SALARM (software alarm) and HALARM (hardware alarm). With the usual, expected mode of no relay problems, SALARM and HALARM are both equivalent to logical 0 in value. Thus, the status of output contact **OUT3** is:

OUT3 = **NOT (logical 0 + logical 0)** = logical 1

This causes the output contact coil for **OUT3** to energize. If output contact **OUT3** is arranged as a b-type output contact (as it is from the factory), then it is open in this energized state. If a problem occurs, either SALARM or HALARM asserts to logical 1 and the output contact coil for **OUT3** de-energizes. This b-type output contact then falls shut in this de-energized state.

In *Figure 3.23*, notice that serial port command **PULSE OUT3** is parallel logic input with SELOGIC setting OUT3 to output contact **OUT3**. If the output contact coil for OUT3 is already energized due to SELOGIC setting OUT3 (its usual state, per the above factory-default setting discussion), then the **PULSE OUT3** command has no effect.

Demand Ammetering

The demand ammetering settings (in *Table 3.7*) are available via the **SET** command (see *Table 4.1* and also *Demand Ammetering Settings (see Figure 3.24 and Figure 3.26) on page SET.5*). Also refer to *MET D Command (Demand Ammeter) on page 5.18*.

The SEL-551C provides demand and peak demand ammetering for the following values:

Currents	
$I_{A,B,C,N}$	Input currents (A primary)
I_G	Residual ground current (A primary; IG = 3I0 = IA + IB + IC)
$3I_2$	Negative-sequence current (A primary)

These demand and peak demand values are thermal demand values. Thermal demand ammetering is explained in the following discussion.

Thermal Demand Ammeter Operation

The example in *Figure 3.24* shows the response of a thermal demand ammeter to a step current input. The current input is at a magnitude of zero and then suddenly goes to an instantaneous level of 1.0 per unit (a "step").

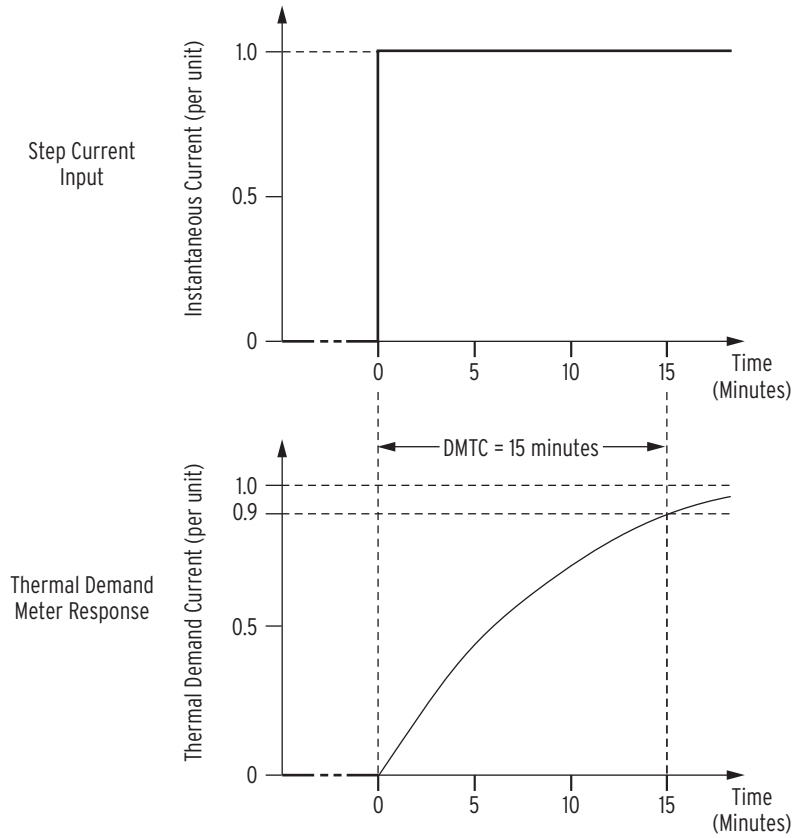

Figure 3.24 Response of Thermal Demand Ammeter to a Step Input (Setting DMTC = 15 minutes)

Thermal Demand Ammeter Response

The response of the thermal demand ammeter in *Figure 3.24* (bottom) to the step current input (top) is analogous to the series RC circuit in *Figure 3.25*.

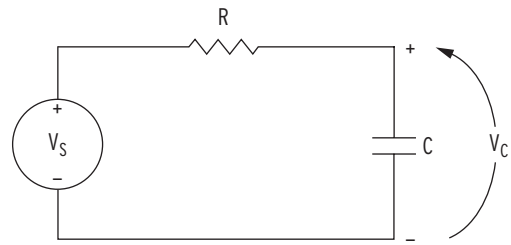

Figure 3.25 Voltage V_S Applied to Series RC Circuit

In the analogy:

Voltage V_S in *Figure 3.25* corresponds to the step current input *Figure 3.24* (top).

Voltage V_C across the capacitor in *Figure 3.25* corresponds to the response of the thermal demand ammeter in *Figure 3.24* (bottom).

If voltage V_S in *Figure 3.25* has been at zero (V_S = 0.0 per unit) for some time, voltage V_C across the capacitor in *Figure 3.25* is also at zero (V_C = 0.0 per unit). If voltage V_S is suddenly stepped up to some constant value (V_S = 1.0 per unit), voltage V_C across the capacitor starts to rise toward the 1.0 per unit value. This voltage rise across the capacitor is analogous to the response of the thermal demand ammeter in *Figure 3.24* (bottom) to the step current input (top).

In general, as voltage V_C across the capacitor in *Figure 3.25* cannot change instantaneously, the thermal demand ammeter response is not immediate either for the increasing or decreasing applied instantaneous current. The thermal demand ammeter response time is based on the demand ammeter time constant setting DMTC (see *Table 3.7*). Note in *Figure 3.24* the thermal demand ammeter response (bottom) is at 90 percent (0.9 per unit) of full applied value (1.0 per unit) after a time period equal to setting DMTC = 15 minutes, referenced to when the step current input is first applied.

The SEL-551C updates thermal demand values approximately every two seconds.

Demand Ammeter Settings

NOTE: Changing setting DMTC resets the demand ammeter values to zero. Demand current pickup settings PDEMP, NDEMP, GDEMP, and QDEMP can be changed without affecting the demand ammeters.

Table 3.7 Demand Ammeter Settings and Settings Range

Setting	Definition	Range
DMTC	Demand meter time constant	5, 10, 15, 30, or 60 minutes
PDEMP	Phase demand current pickup	OFF, 0.50–16.00 A {5 A nominal}, 0.10–3.20 A {1 A nominal}, in 0.01 A steps
NDEMP	Neutral ground demand current pickup	
GDEMP	Residual ground demand current pickup	
QDEMP	Negative-sequence demand current pickup	

The demand current pickup settings in *Table 3.7* are applied to demand current meter outputs as shown in *Figure 3.26*. For example, when residual ground demand current $I_{G(DEM)}$ goes above corresponding demand pickup GDEMP,

Relay Word bit GDEM asserts to logical 1. Use these demand current logic outputs (PDEM, NDEM, GDEM, and QDEM) to alarm for high loading or unbalance conditions. Use in other schemes such as the following example.

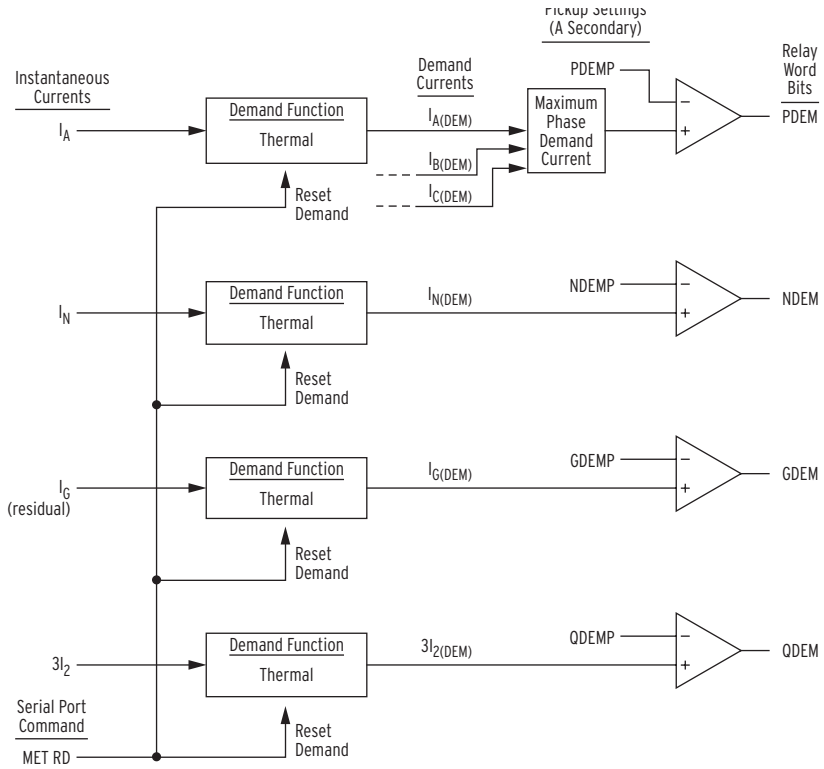

Figure 3.26 Demand Current Logic Outputs

Demand Current Logic Output Application—Raise Pickup for Unbalance Current

During times of high loading, the residual ground overcurrent elements can see relatively high unbalance current I_G ($I_G = 3I_0$). To avoid tripping on unbalance current I_G, use Relay Word bit GDEM to detect the residual ground (unbalance) demand current $I_{G(DEM)}$ and effectively raise the pickup of the residual ground time-overcurrent element 51G1T. This is accomplished with the following settings from *Table 3.7*, pertinent residual ground overcurrent element settings, and SELOGIC control equation torque control setting 51G1TC (see *Figure 3.27*).

DMTC = **5**

GDEMP = **1.0**

51G1P = **1.50**

50G1P = **2.30**

51G1TC = **!GDEM + GDEM * 50G1**

Refer to *Figure 3.26*, *Figure 3.27*, and *Figure 3.11*.

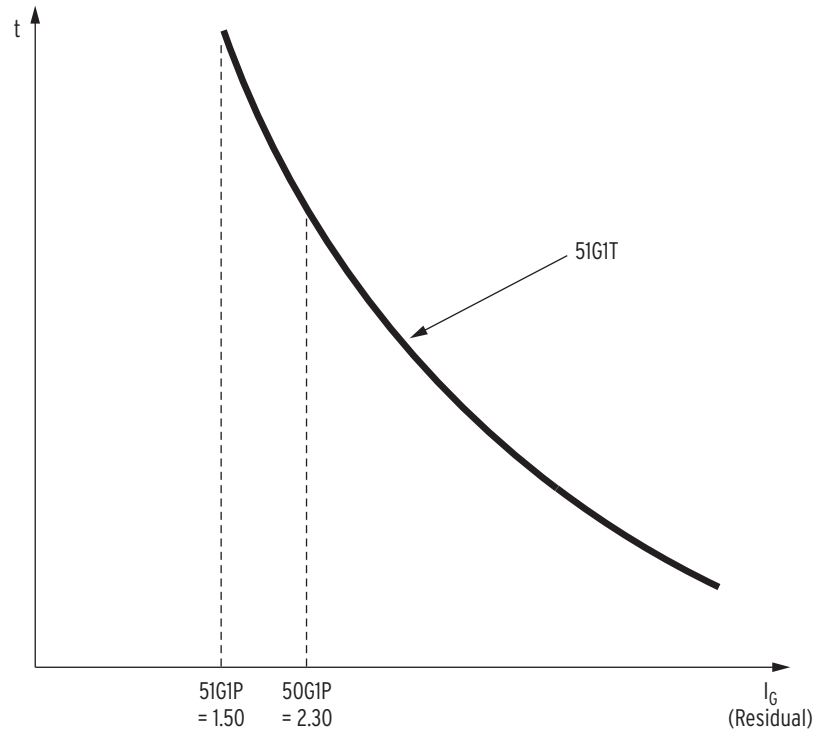

Figure 3.27 Raise Pickup of Residual Ground Time-Overcurrent Element for Unbalance Current

Residual Ground Demand Current Below Pickup GDEMP

When unbalance current I_G is low, unbalance demand current $I_{G(DEM)}$ is below corresponding demand pickup GDEMP = 1.00 A secondary, and Relay Word bit GDEM is deasserted to logical 0. This results in SELOGIC control equation torque control setting 51G1TC being in the state:

51G1TC = **!GDEM + GDEM * 50G1** = NOT(GDEM) + GDEM * 50G1
=NOT(logical 0) + (logical 0) * 50G1 = logical 1

Thus, the residual ground time-overcurrent element 51G1T operates on its standard pickup:

51G1P = **1.50 A secondary**

If a ground fault occurs, the residual ground time-overcurrent element 51G1T operates with the sensitivity provided by pickup 51G1P = 1.50 A secondary. The thermal demand ammeter, even with setting DMTC = 5 minutes, does not respond fast enough to the ground fault to make a change to the effective residual ground time-overcurrent element pickup—it remains at 1.50 A secondary. Demand meters respond to more “slow moving” general trends.

Residual Ground Demand Current Goes Above Pickup GDEMP

When unbalance current I_G increases, unbalance demand current $I_{G(DEM)}$ follows, going above corresponding demand pickup GDEMP = 1.00 A secondary, and Relay Word bit GDEM asserts to logical 1. This results in SELOGIC control equation torque control setting 51G1TC being in the state:

51G1TC = **!GDEM + GDEM * 50G1** = NOT(GDEM) + GDEM * 50G1 =
NOT(logical 1) + (logical 1) * 50G1 = logical 0 + 50G1 = 50G1

Thus, the residual ground time-overcurrent element 51G1T operates with an effective, less-sensitive pickup:

50G1P = **2.30 A secondary**

The reduced sensitivity keeps the residual ground time-overcurrent element 51G1T from tripping on higher unbalance current I_G.

Residual Ground Demand Current Goes Below Pickup GDEMP Again

When unbalance current I_G decreases again, unbalance demand current $I_{G(DEM)}$ follows, going below corresponding demand pickup GDEMP = 1.00 A secondary, and Relay Word bit GDEM deasserts to logical 0. This results in SELOGIC control equation torque control setting 51G1TC being in the state:

51G1TC = **!GDEM + GDEM * 50G1** = NOT(GDEM) + GDEM * 50G1 = NOT(logical 0) + (logical 0) * 50G1 = logical 1

Thus, the residual ground time-overcurrent element 51G1T operates on its standard pickup again:

51G1P = **1.50 A secondary**

View or Reset Demand Ammetering Information

Via Serial Port

See *MET D Command (Demand Ammeter) on page 5.18*. The **MET D** command displays demand and peak demand ammetering for the following values:

Currents	
$I_{A,B,C,N}$	Input currents (A primary)
I_G	Residual ground current (A primary; IG = 3I0 = IA + IB + IC)
$3I_2$	Negative-sequence current (A primary)

The **MET RD** command resets the demand ammetering values. The **MET RP** command resets the peak demand ammetering values.

Via Front Panel

The information and reset functions available via the previously discussed serial port commands **MET D**, **MET RD**, and **MET RP** are also available via the front-panel **{METER}** pushbutton. See *Figure 6.2*.

Demand Ammetering Updating and Storage

The SEL-551C updates demand values approximately every two seconds.

The relay stores peak demand values to nonvolatile storage once per day (it overwrites the previous stored value if it is exceeded). Should the relay lose control power, it will restore the peak demand values saved by the relay at 23:50 hours on the previous day.

Latch Control Switches

The latch control switch feature of this relay replaces latching relays. Traditional latching relays maintain their output contact state when set. The SEL-551C relay latch bit retains memory even when control power is lost. If the latch bit is set to a programmable output contact and control power is lost to the relay, the state of the latch bit is stored in nonvolatile memory but the output contact will go to its de-energized state. When the control power is applied back to the relay, the programmed output contact will go back to the state of the latch bit after relay initialization.

The state of a traditional latching relay output contact is changed by pulsing the latching relay inputs (see *Figure 3.28*). Pulse the set input to close ("set") the latching relay output contact. Pulse the reset input to open ("reset") the latching relay output contact. Often the external contacts wired to the latching relay inputs are from remote control equipment (e.g., SCADA, RTU).

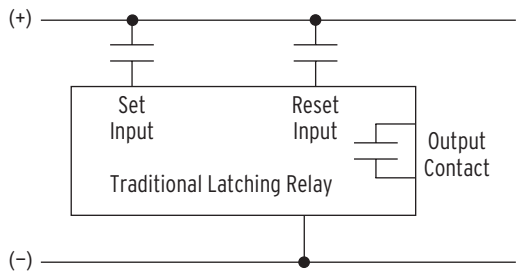

Figure 3.28 Traditional Latching Relay

The eight latch control switches in the SEL-551C provide latching relay type functions.

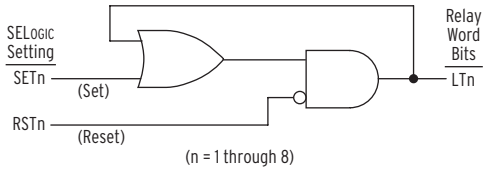

Figure 3.29 Latch Control Switches Drive Latch Bits LT1–LT8

The output of the latch control switch in *Figure 3.29* is a Relay Word bit LT*n* (*n* = 1–8), called a latch bit. The latch control switch logic in *Figure 3.29* repeats for each latch bit LT1–LT8. Use these latch bits in SELOGIC control equations.

These latch control switches each have the following SELOGIC control equation settings:

SETn (set latch bit LT*n* to logical 1)

RSTn (reset latch bit LT*n* to logical 0)

If setting SET*n* asserts to logical 1, latch bit LT*n* asserts to logical 1. If setting RST*n* asserts to logical 1, latch bit LT*n* deasserts to logical 0. If both settings SET*n* and RST*n* assert to logical 1, setting RST*n* has priority and latch bit LT*n* deasserts to logical 0.

Latch Control Switch Application Ideas

Latch control switches can be used for such applications as:

- Reclosing relay enable/disable
- Ground relay enable/disable
- Sequence coordination enable/disable

Latch control switches can be applied to almost any control scheme. The following is an example of using a latch control switch to enable/disable the reclosing relay in the SEL-551C.

Reclosing Relay Enable/Disable Setting Example

Use a latch control switch to enable/disable the reclosing relay in the SEL-551C. In the *Figure 3.30* example, a SCADA contact is connected to optoisolated input **IN4**. Each pulse of the SCADA contact changes the state of the reclosing relay. The SCADA contact is not maintained, just pulsed to enable/disable the reclosing relay.

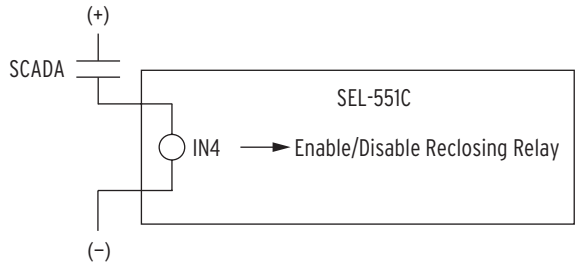

Figure 3.30 SCADA Contact Pulses Input IN4 to Enable/Disable Reclosing Relay

If the reclosing relay is enabled and the SCADA contact is pulsed, the reclosing relay is then disabled. If the SCADA contact is pulsed again, the reclosing relay is enabled again. The control operates in a cyclic manner:

pulse to enable ... pulse to disable ... pulse to enable ... pulse to disable ...

This reclosing relay logic is implemented in the following SELOGIC control equation settings and displayed in *Figure 3.31*.

SET1 = **/IN4 * !LT1** [= (rising edge of input IN4) AND NOT(LT1)]

RST1 = **/IN4 * LT1** [= (rising edge of input IN4) AND LT1]

79DTL = **!LT1** [= NOT(LT1); drive-to-lockout setting]

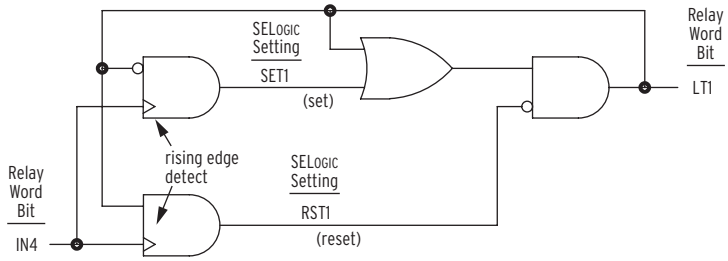

Figure 3.31 Latch Control Switch Controlled by a Single Input to Enable/Disable Reclosing

Feedback Control

Note in *Figure 3.31* that the latch control switch output (latch bit LT1) is effectively used as feedback for SELOGIC control equation settings SET1 and RST1. The feedback of latch bit LT1 "guides" input **IN4** to the correct latch control switch input.

If latch bit LT1 = logical 0, input **IN4** is routed to setting SET1 (set latch bit LT1):

SET1 = **/IN4 * !LT1** = /IN4 * NOT(LT1) = /IN4 * NOT(logical 0) = /IN4 = rising edge of input IN4

RST1 = **/IN4 * LT1** = /IN4 * (logical 0) = logical 0

If latch bit LT1 = logical 1, input **IN4** is routed to setting RST1 (reset latch bit LT1):

SET1 = **/IN4 * !LT1** = /IN4 * NOT(LT1) = /IN4 * NOT(logical 1) = /IN4 * (logical 0) = logical 0

RST1 = **/IN4 * LT1** = /IN4 * (logical 1) =/IN4 = rising edge of input **IN4**

Rising Edge Operators

Refer to *Figure 3.31* and *Figure 3.32*.

The rising edge operator in front of Relay Word bit IN4 (/IN4) sees a logical 0 to logical 1 transition as a "rising edge," and /IN4 asserts to logical 1 for one processing interval.

The rising edge operator on input **IN4** is necessary because any single assertion of optoisolated input **IN4** by the SCADA contact will last for at least a few cycles, and each individual assertion of input **IN4** should only change the state of the latch control switch once (e.g., latch bit LT1 changes state from logical 0 to logical 1).

For example in *Figure 3.31*, if:

LT1 = **logical 0**

input **IN4** is routed to setting SET1 (as discussed previously):

SET1 = **/IN4** = rising edge of input **IN4**

If input **IN4** is then asserted for a few cycles by the SCADA contact (see Pulse 1 in *Figure 3.32*), SET1 is asserted to logical 1 for one processing interval. This causes latch bit LT1 to change state to:

LT1 = **logical 1**

the next processing interval.

With latch bit LT1 now at logical 1 for the next processing interval, input **IN4** is routed to setting RST1 (as discussed previously):

RST1 = **/IN4** = rising edge of input **IN4**

This would then appear to enable the "reset" input (setting RST1) the next processing interval. But the "rising edge" condition occurred the preceding processing interval. The rising edge of input IN4 is now at logical 0, so setting RST1 does not assert, even though input **IN4** remains asserted for at least a few cycles by the SCADA contact.

If the SCADA contact deasserts and then asserts again (new rising edge—see Pulse 2 in *Figure 3.32*), the "reset" input (setting RST1) asserts and latch bit LT1 deasserts back to logical 0 again. Thus, each individual assertion of input **IN4** (Pulse 1, Pulse 2, Pulse 3, and Pulse 4 in *Figure 3.32*) changes the state of the latch control switch just once.

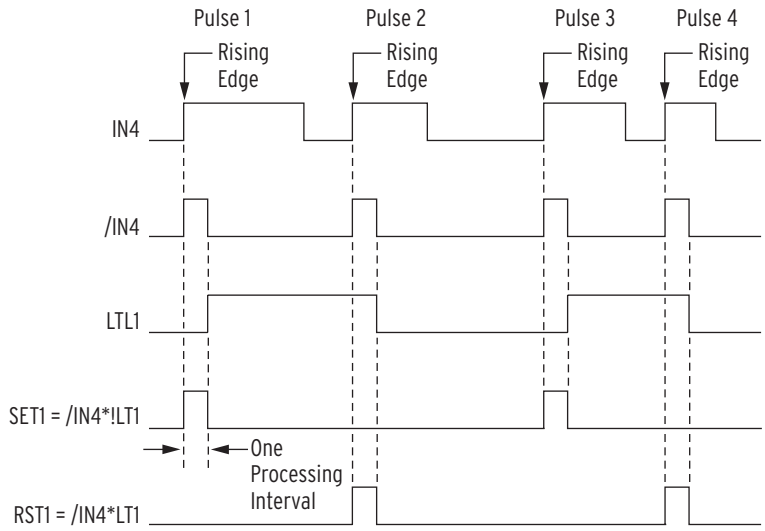

Figure 3.32 Latch Control Switch Operation Time Line

Use a Remote Bit Instead to Enable/Disable the Reclosing Relay

Use a remote bit to enable/disable the reclosing relay, instead of an optoisolated input. For example, substitute remote bit RB1 for optoisolated input IN4 in the settings accompanying *Figure 3.31*:

SET1 = **/RB1 * !LT1** [= (rising edge of remote bit RB1) AND NOT(LT1)]

RST1 = **/RB1 * LT1** [= (rising edge of remote bit RB1) AND LT1]

79DTL = **!LT1** [= NOT(LT1); drive-to-lockout setting]

Pulse remote bit RB1 to enable reclosing, pulse remote bit RB1 to disable reclosing, etc.-much like the operation of optoisolated input **IN4** in the previous example. Remote bits (Relay Word bits RB1–RB8) are operated through the serial port. See *Figure 3.3* and *Section 5: Serial Port Communications and Commands* for more information on remote bits.

These are just a few control logic examples—many variations are possible.

Latch Control Switch States Retained

Power Loss

NOTE: If a latch bit is set to a programmable output contact (e.g., OUT2 = LT2) and power to the relay is lost, the state of the latch bit is stored in nonvolatile memory but the output contact will go to its de-energized state. When power to the relay is restored, the programmable output contact will go back to the state of the latch bit after relay initialization.

The states of the latch bits (LT1–LT8) are retained if power to the relay is lost and then restored. If a latch bit is asserted (e.g., LT2 = logical 1) when power is lost, it comes back asserted (LT2 = logical 1) when power is restored. If a latch bit is deasserted (e.g., LT3 = logical 0) when power is lost, it comes back deasserted (LT3 = logical 0) when power is restored. This feature makes the latch bit feature behave the same as traditional latching relays. In a traditional installation, if power is lost to the panel, the latching relay output contact position remains unchanged.

Settings Change

If individual settings are changed, the states of the latch bits (Relay Word bits LT1–LT8) are retained, much like in the preceding Power Loss explanation.

Note: Make Latch Control Switch Settings With Care

The latch bit states are stored in nonvolatile memory so they can be retained during power loss or settings change. The nonvolatile memory is rated for a finite number of "writes" for all cumulative latch bit state changes. Exceeding the limit can result in an EEPROM self-test failure. An average of 70 cumulative latch bit state changes per day can be made for a 25-year relay service life.

This requires that SELOGIC control equation settings SET*n* and RST*n* for any given latch bit LT*n* (*n* = 1–8; see *Figure 3.29*) be set with care. Settings SET*n* and RST*n* cannot result in continuous cyclical operation of latch bit LT*n*. Use timers to qualify conditions set in settings SET*n* and RST*n*. If any optoisolated inputs **IN1**–**IN6** are used in settings SET*n* and RST*n*, the inputs have their own fixed debounce timer that can help in providing the necessary time qualification (see *Figure 3.1*).

In the preceding reclosing relay enable/disable example application (*Figure 3.30*, *Figure 3.31*, and *Figure 3.32*), the SCADA contact cannot be asserting/deasserting continuously, thus causing latch bit LT1 to change state continuously. Note that the rising edge operators in the SET1 and RST1 settings keep latch bit LT1 from cyclically operating for any single assertion of the SCADA contact.

Another variation to the example application in *Figure 3.30*, *Figure 3.31*, and *Figure 3.32* that adds more security is a timer with pickup/dropout times set the same (see *Figure 3.33* and *Figure 3.34*). Suppose that SV6PU and SV6DO are both set to 300 cycles. Then the SV6T timer keeps the state of latch bit LT1 from being able to be changed at a rate faster than once every 300 cycles (five seconds).

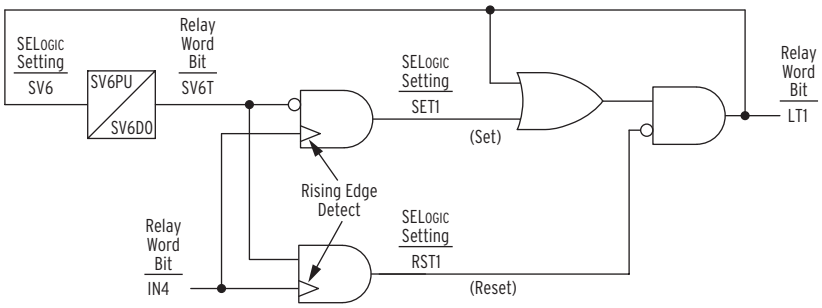

Figure 3.33 Latch Control Switch (With Time Delay Feedback) Controlled by a Single Input to Enable/Disable Reclosing

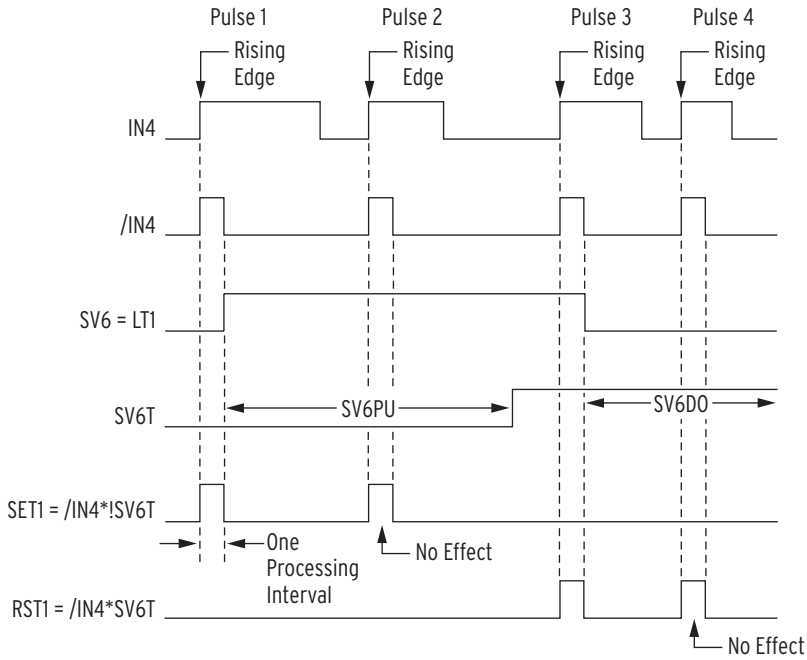

Figure 3.34 Latch Control Switch (With Time Delay Feedback) Operation Time Line

Front-Panel Target LEDs

Refer to *Figure 2.5* for the arrangement of the target LEDs on the front panel of the SEL-551C Relay.

Table 3.8 SEL-551C Front-Panel Target LED Definitions

LED	Definition
EN	Relay Enabled—see subsection *Relay Self-Tests on page 8.18*
INST	Instantaneous trip—see further details following
A	Phase A involved in the fault—see further details following
B	Phase B involved in the fault—see further details following
C	Phase C involved in the fault—see further details following
N	Ground involved in the fault—see further details following
RS	Reclosing relay in the Reset State (follows Relay Word bit 79RS)
LO	Reclosing relay in the Lockout State (follows Relay Word bit 79LO)

Further Target LED Details

The INST target LED illuminates if Relay Word bit TRIP asserts less than 3 cycles after any of the following Relay Word bits assert: 51P1, 51P2, 51N1, 51G1, 51Q1, 51Q2, 50P1, 50P2, 50P3, 50P4, 50P5, 50P6, 50A, 50B, 50C, 50N1, 50N2, 50G1, 50G2, 50Q1, or 50Q2.

The A target LED illuminates if Relay Word bit TRIP asserts when phase A current (current input IA) is above phase pickup setting 51P1P, 51P2P, 50P1P, 50P2P, 50P3P, 50P4P, 50P5P, 50P6P, 50A, 51Q1, or 51Q2.

The B target LED illuminates if Relay Word bit TRIP asserts when phase B current (current input IB) is above phase pickup setting 51P1P, 51P2P, 50P1P, 50P2P, 50P3P, 50P4P, 50P5P, 50P6P, 50B, 51Q1, or 51Q2.

The C target LED illuminates if Relay Word bit TRIP asserts when phase C current (current input IC) is above phase pickup setting 51P1P, 51P2P, 50P1P, 50P2P, 50P3P, 50P4P, 50P5P, 50P6P, 50C, 51Q1, or 51Q2.

The N target LED illuminates if Relay Word bit TRIP asserts when neutral ground current (current input IN) is above neutral ground pickup setting 51N1P, 50N1P, 50N2P, or residual ground current (derived from current inputs IA, IB, and IC) is above residual ground pickup setting 51G1P, 50G1P, or 50G2P.

Target Reset/Lamp Test Front-Panel Pushbutton

When the Target Reset/Lamp Test front-panel pushbutton is pressed:

- all front-panel LEDs are illuminated for one (1) second
- and then the Fault Type target LEDs (INST, A, B, C, and N) are extinguished

Other Applications for the Target Reset Function

Refer to the bottom of *Figure 3.13*. The combination of the {TARGET RESET} pushbutton and the **TAR R** (Target Reset) serial port command is available as Relay Word bit TRGTR. Relay Word bit TRGTR pulses to logical 1 for one processing interval when the **TAR R** (Target Reset) serial port command is executed (the **TAR R** serial port command can also be effectively operated via

Modbus protocol, too—see *Appendix G: Modbus RTU Communications Protocol*). Relay Word bit TRGTR asserts to logical 1 for as long as the **{TARGET RESET}** pushbutton is pressed.

Relay Word bit TRGTR can be used to unlatch logic. For example, refer to the breaker failure logic in *Figure 3.22*. If a breaker failure trip occurs (SV7T asserts), the occurrence can be displayed on the front panel with seal-in logic and a rotating default display (see *Rotating Default Display on page 6.12*, also):

SET4 = **SV7T**

RST4 = **TRGTR**

DP3 = **LT4**

DP3_1 = **BREAKER FAILURE**

DP3_0 = **NA** (blank)

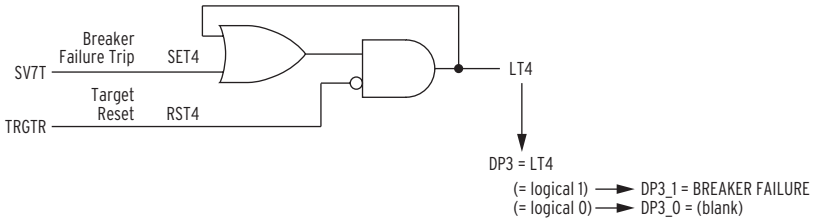

Figure 3.35 Seal-In of Breaker Failure Occurrence for Message Display

If a breaker failure trip has occurred, the momentary assertion of SV7T (breaker failure trip) will cause latch bit LT4 in *Figure 3.35* to seal-in (refer to *Latch Control Switches on page 3.50* for more information on latch bits). Asserted LT4 in turn asserts DP3, causing the message:

to display in the rotating default display.

This message can be removed from the display rotation by pushing the **{TARGET RESET}** pushbutton (Relay Word bit TRGTR asserts to logical 1, unlatching LT4 and in turn deasserting DP3). Thus, front-panel rotating default displays can be easily reset along with the front-panel targets by pushing the **{TARGET RESET}** pushbutton.

This page intentionally left blank

Section 4

Setting the Relay

Overview

Change or view settings with the **SET** and **SHOWSET** serial port commands and the front-panel {SET} pushbutton. *Table 4.1* lists the serial port **SET** commands.

Table 4.1 Serial Port SET Commands

Command	Settings Type	Description	Settings Sheets[a]
SET	Relay	Overcurrent elements, reclosing relay, timers, etc.	*1–6*
SET L	Logic	SELOGIC® Control Equations	*7–9*
SET R	SER	Sequential Events Recorder trigger conditions	*14*
SET T	Text	Front-panel default display text; local control text	*12–13*
SET P 1	Port	Rear serial port protocol settings	*10*
SET P F or **SET P 2**	Port	Front serial port protocol settings (optional)	*10–11*

[a] Located at end of this section.

View settings with the respective serial port **SHOWSET** commands (**SHO**, **SHO L**, **SHO R**, **SHO T**, **SHO P**). See *SHO Command (Showset) on page 5.19*.

Settings Changes Via the Front Panel

The relay front-panel {SET} pushbutton provides access to the Relay and Port settings only. Thus, the corresponding Relay and Port settings sheets that follow in this section can also be used when making these settings via the front panel. Refer to *Figure 6.3* for information on front-panel communications.

Settings Changes Via the Serial Port

See *Section 5: Serial Port Communications and Commands* for information on serial port communications and relay access levels. To change a specific setting, enter the command:

SET *n s*

where:

n = L, R, T, P, P 1, P F, or P 2 (parameter n is not entered for the Relay settings)

s = the name of the specific setting you wish to jump to and begin setting. If *s* is not entered, the relay starts at the first setting.

When you execute the **SET** command, the relay presents a list of settings, one at a time. Enter a new setting, or press **<Enter>** to accept the existing setting. Editing keystrokes are shown in *Table 4.2*.

Table 4.2 SET Command Editing Keystrokes

Press Key(s)	Results
<Enter>	Retains setting and moves to the next.
^ <Enter>	Returns to previous setting.
< <Enter>	Returns to previous setting.
> <Enter>	Moves to next setting.
END <Enter>	Exits editing session, then prompts you to save the settings.
<Ctrl+X>	Aborts editing session without saving changes.

The relay checks each entry to ensure that it is within the setting range. If it is not, an `Out of Range` message is generated, and the relay prompts for the setting again.

When settings are complete, the relay displays the new settings and prompts for approval to enable them. Answer **Y <Enter>** to enable the new settings. For about one second, while the active settings are updated, the relay is disabled and the **OUT3** output contact closes for the SEL-551C [assuming b-type output contact and SELOGIC programming: OUT3 = !(SALARM + HALARM); see *Figure 3.23*].

Time-Overcurrent Element Setting Reference Information

The following information describes the curve timing for the curve and time dial settings made for the time-overcurrent elements (see *Figure 3.9*–*Figure 3.12*). The time-overcurrent relay curves in *Figure 4.1*–*Figure 4.10* conform to IEEE C37.112-1996 IEEE Standard Inverse Time Characteristic Equations for Overcurrent Relays.

t_p = operating time in seconds

t_r = electromechanical induction-disk emulation reset time in seconds (if electromechanical reset setting is made)

TD = time dial setting

M = applied multiples of pickup current [for operating time (t_p), M>1; for reset time (t_r), M≤1].

Table 4.3 Equations Associated With U.S. Curves

Curve Type	Operating Time	Reset Time	Figure
U1 (Moderately Inverse)	$t_p = TD \bullet \left(0.0226 + \frac{0.0104}{M^{0.02} - 1}\right)$	$t_r = TD \bullet \left(\frac{1.08}{1 - M^2}\right)$	*Figure 4.1*
U2 (Inverse)	$t_p = TD \bullet \left(0.180 + \frac{5.95}{M^2 - 1}\right)$	$t_r = TD \bullet \left(\frac{5.95}{1 - M^2}\right)$	*Figure 4.2*
U3 (Very Inverse)	$t_p = TD \bullet \left(0.0963 + \frac{3.88}{M^2 - 1}\right)$	$t_r = TD \bullet \left(\frac{3.88}{1 - M^2}\right)$	*Figure 4.3*
U4 (Extremely Inverse)	$t_p = TD \bullet \left(0.0352 + \frac{5.67}{M^2 - 1}\right)$	$t_r = TD \bullet \left(\frac{5.67}{1 - M^2}\right)$	*Figure 4.4*
U5 (Short-Time Inverse)	$t_p = TD \bullet \left(0.00262 + \frac{0.00342}{M^{0.02} - 1}\right)$	$t_r = TD \bullet \left(\frac{0.323}{1 - M^2}\right)$	*Figure 4.5*

Table 4.4 Equations Associated With IEC Curves (Sheet 1 of 2)

Curve Type	Operating Time	Reset Time	Figure
C1 (Standard Inverse)	$t_p = TD \bullet \left(\frac{0.14}{M^{0.02} - 1}\right)$	$t_r = TD \bullet \left(\frac{13.5}{1 - M^2}\right)$	*Figure 4.6*
C2 (Very Inverse)	$t_p = TD \bullet \left(\frac{13.5}{M - 1}\right)$	$t_r = TD \bullet \left(\frac{47.3}{1 - M^2}\right)$	*Figure 4.7*

Table 4.4 Equations Associated With IEC Curves (Sheet 2 of 2)

Curve Type	Operating Time	Reset Time	Figure
C3 (Extremely Inverse)	$t_p = TD \bullet \left(\frac{80}{M^2 - 1}\right)$	$t_r = TD \bullet \left(\frac{80}{1 - M^2}\right)$	*Figure 4.8*
C4 (Long-Time Inverse)	$t_p = TD \bullet \left(\frac{120}{M - 1}\right)$	$t_r = TD \bullet \left(\frac{120}{1 - M}\right)$	*Figure 4.9*
C5 (Short-Time Inverse)	$t_p = TD \bullet \left(\frac{0.05}{M^{0.04} - 1}\right)$	$t_r = TD \bullet \left(\frac{4.85}{1 - M^2}\right)$	*Figure 4.10*

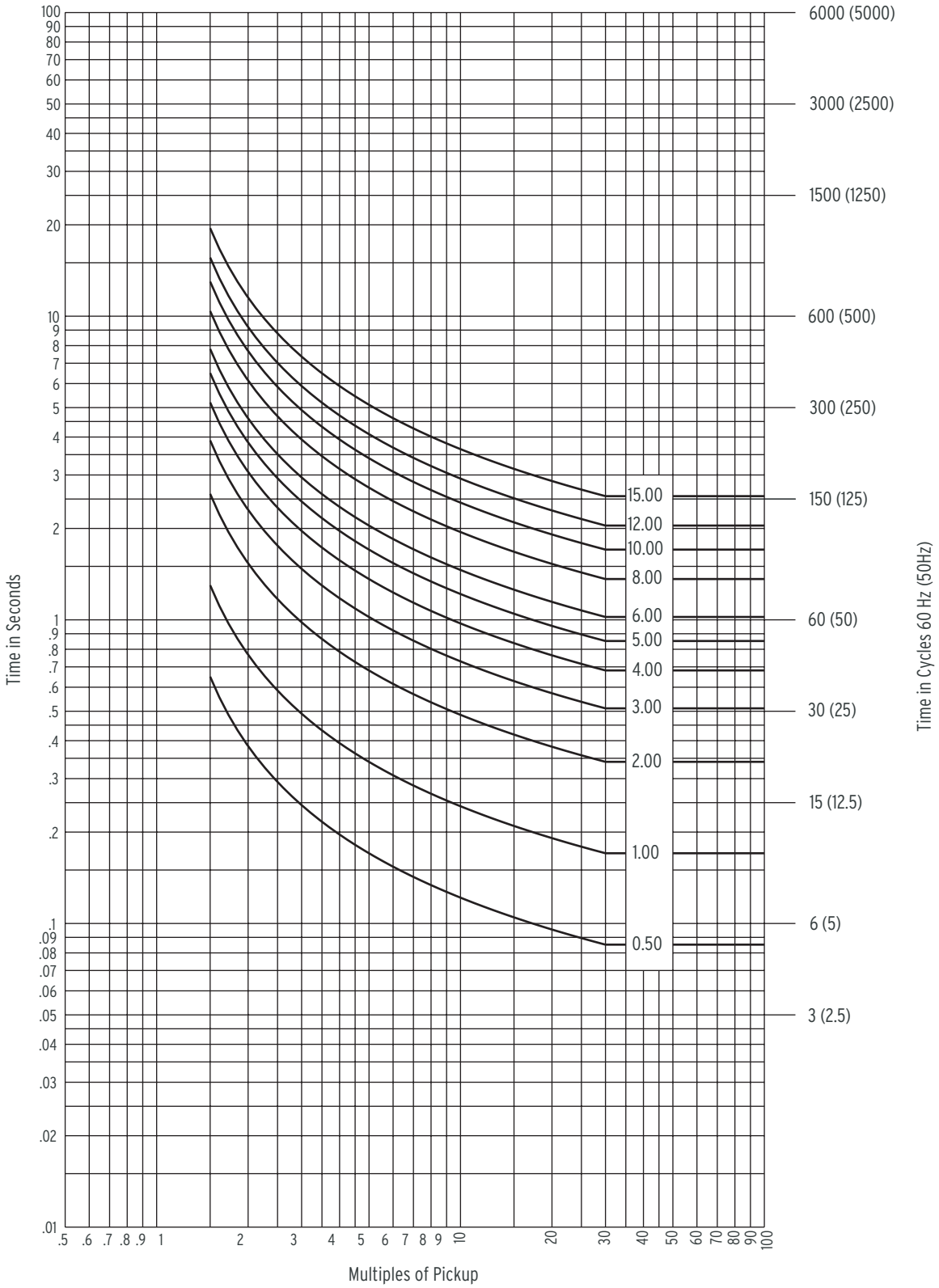

Figure 4.1 U.S. Moderately Inverse Curve: U1

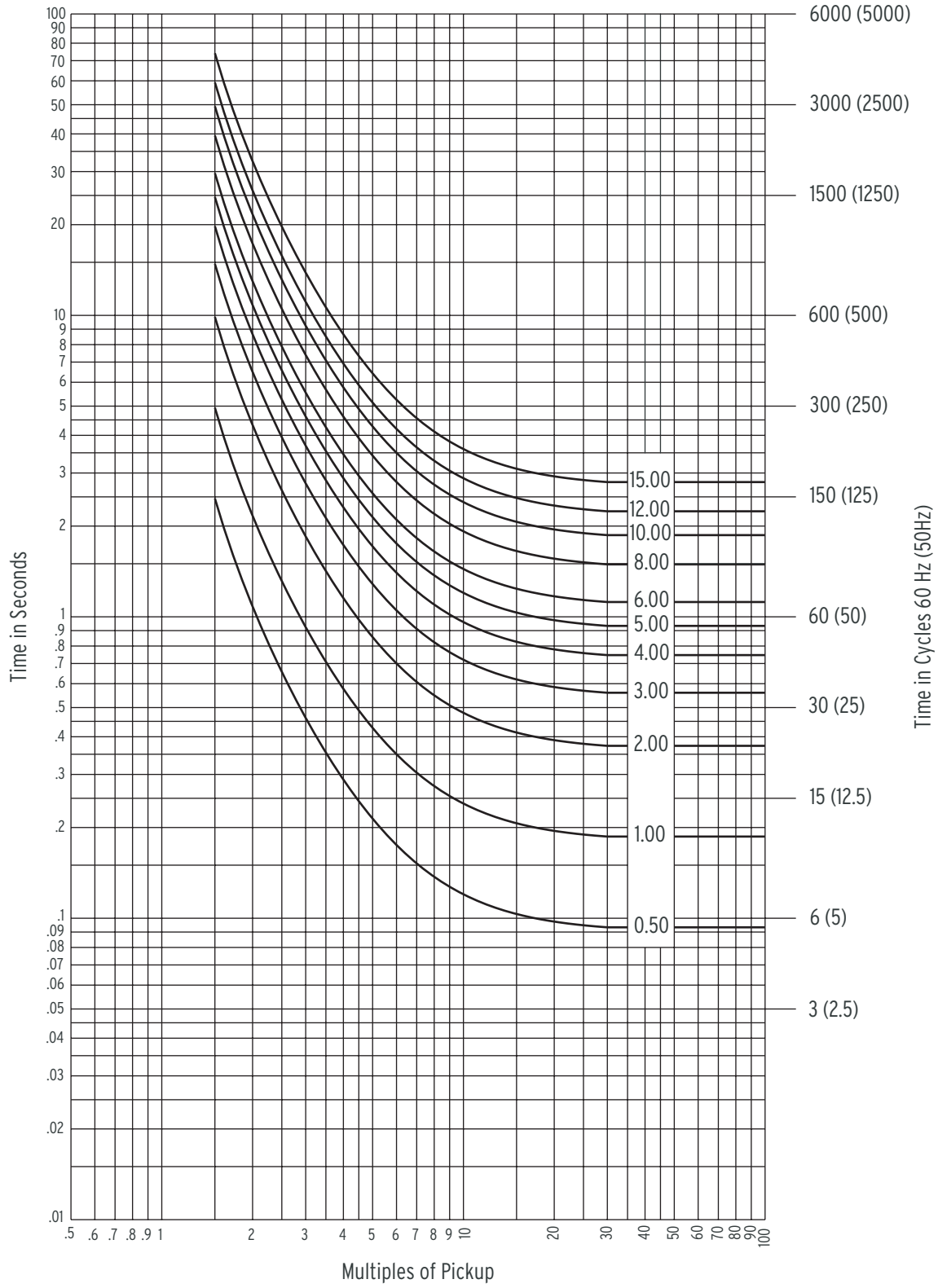

Figure 4.2 U.S. Inverse Curve: U2

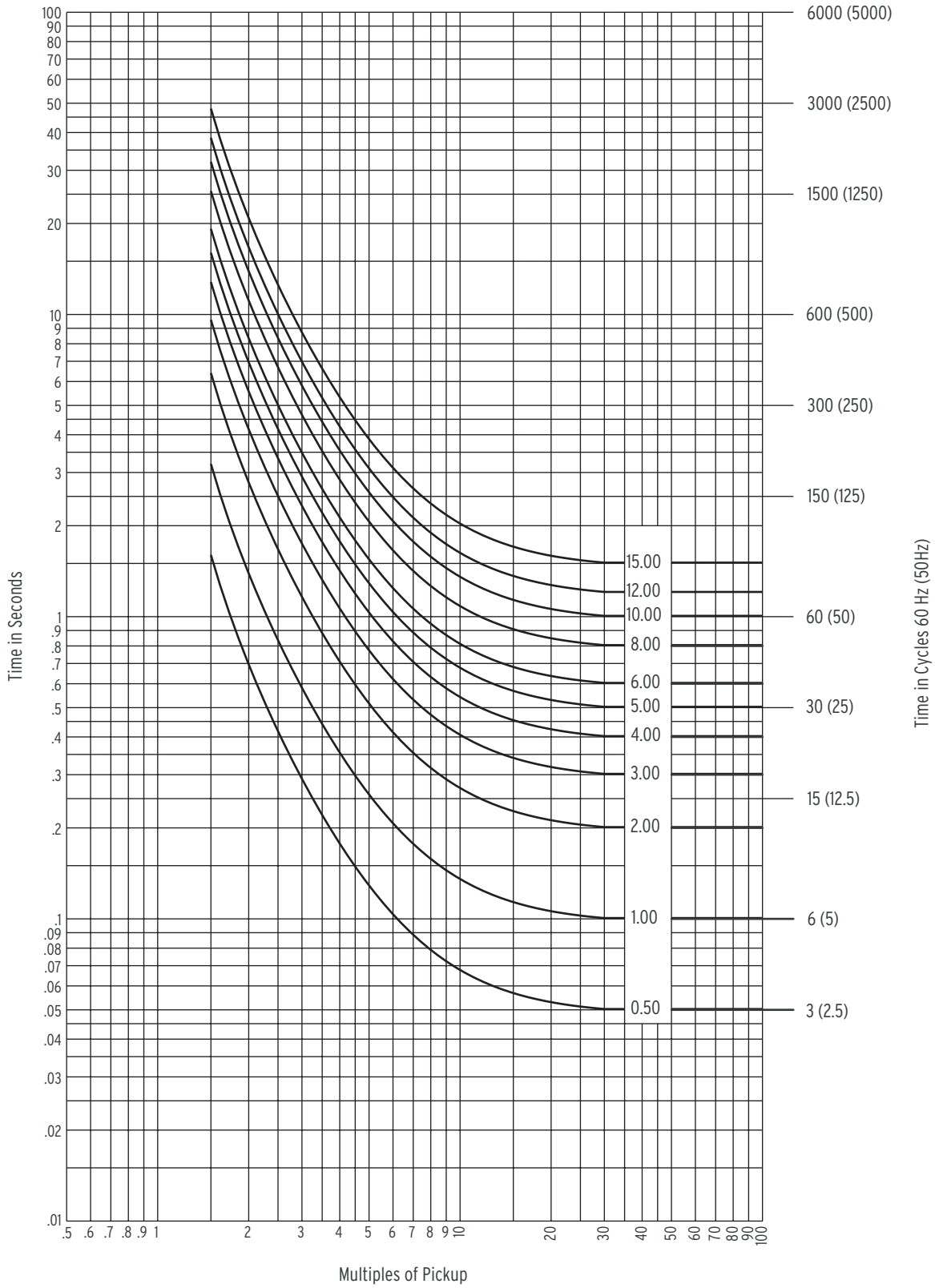

Figure 4.3 U.S. Very Inverse Curve: U3

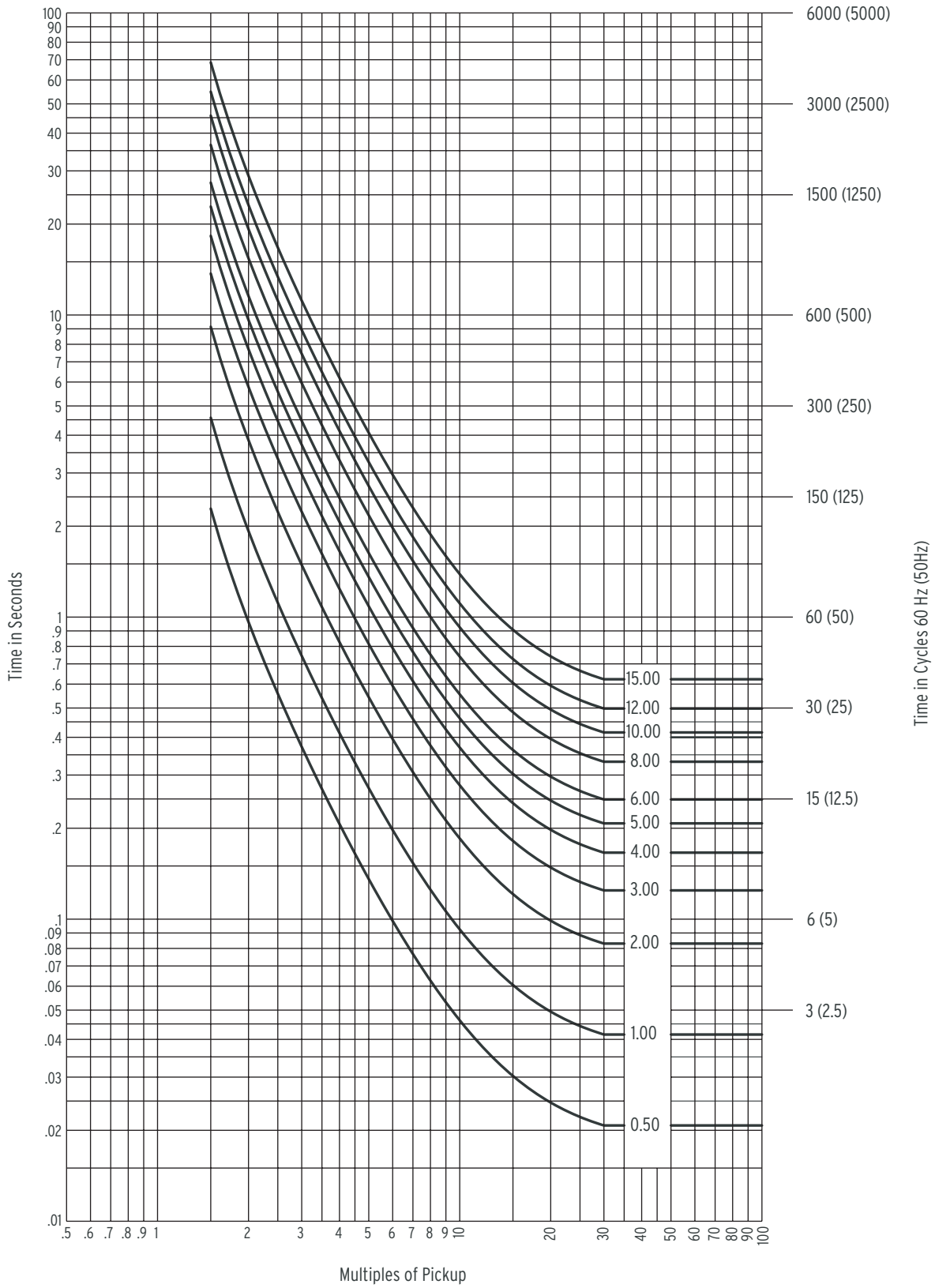

Figure 4.4 U.S. Extremely Inverse Curve: U4

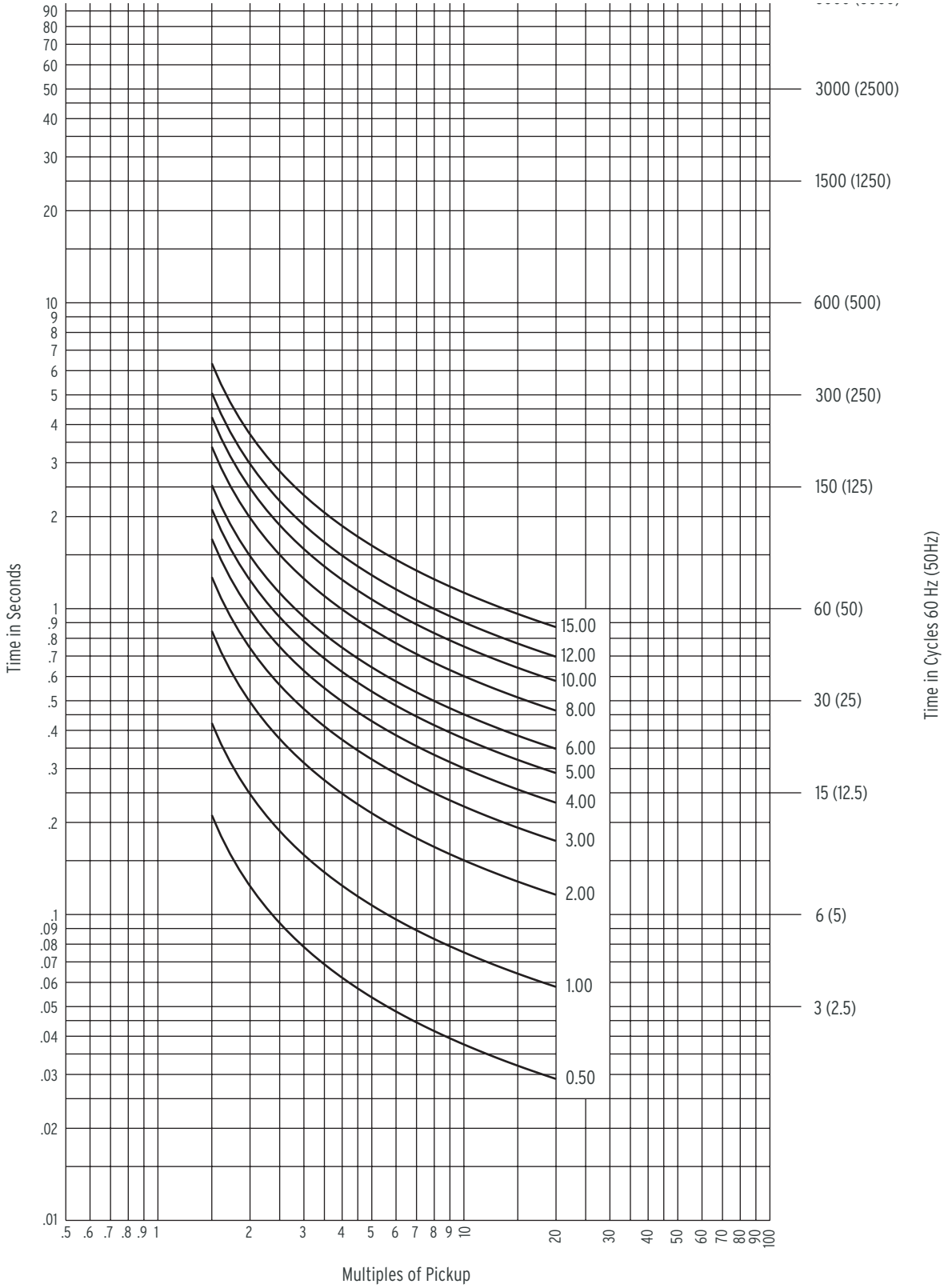

Figure 4.5 U.S. Short-Time Inverse Curve: U5

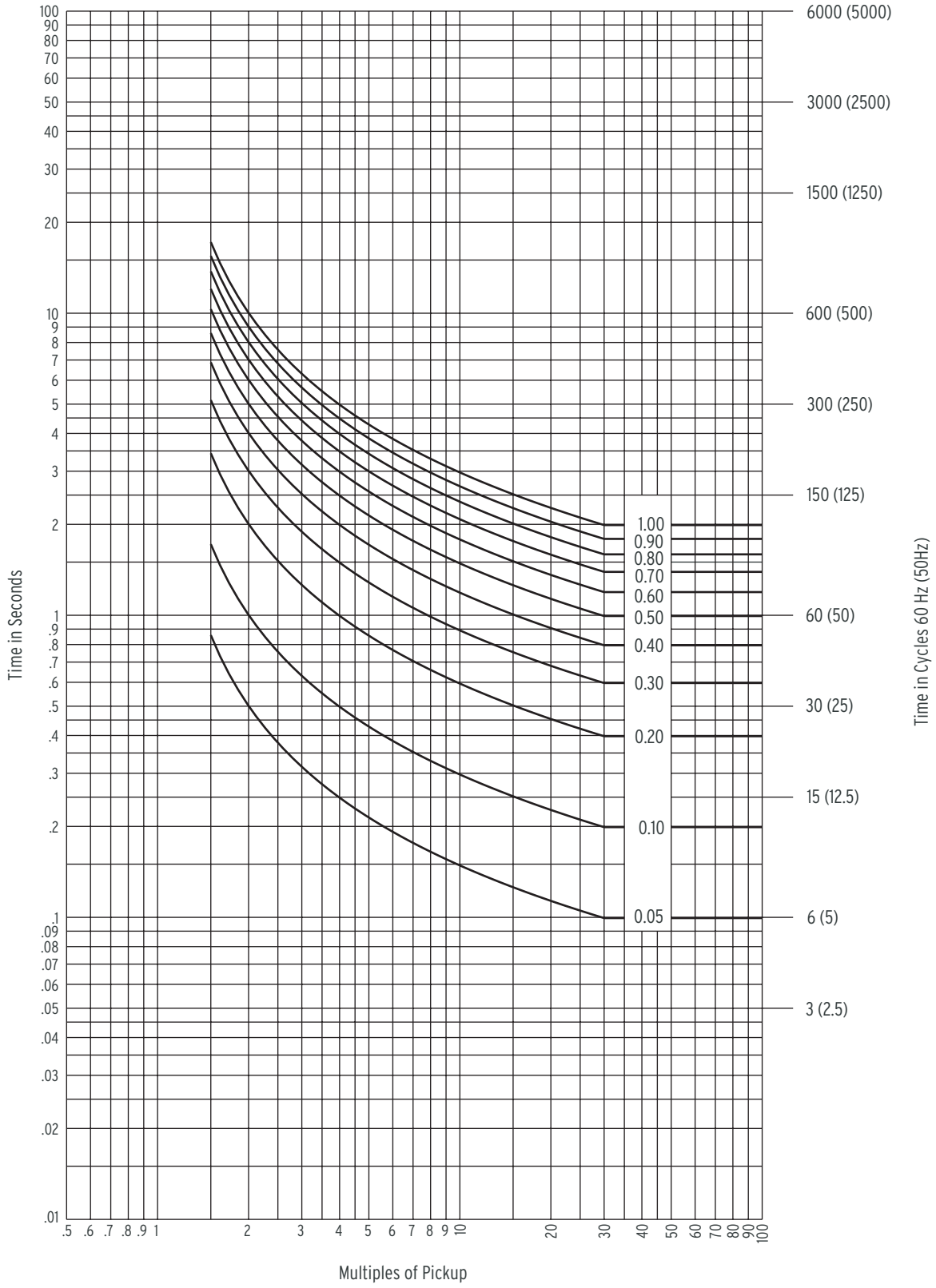

Figure 4.6 I.E.C. Class A Curve (Standard Inverse): C1

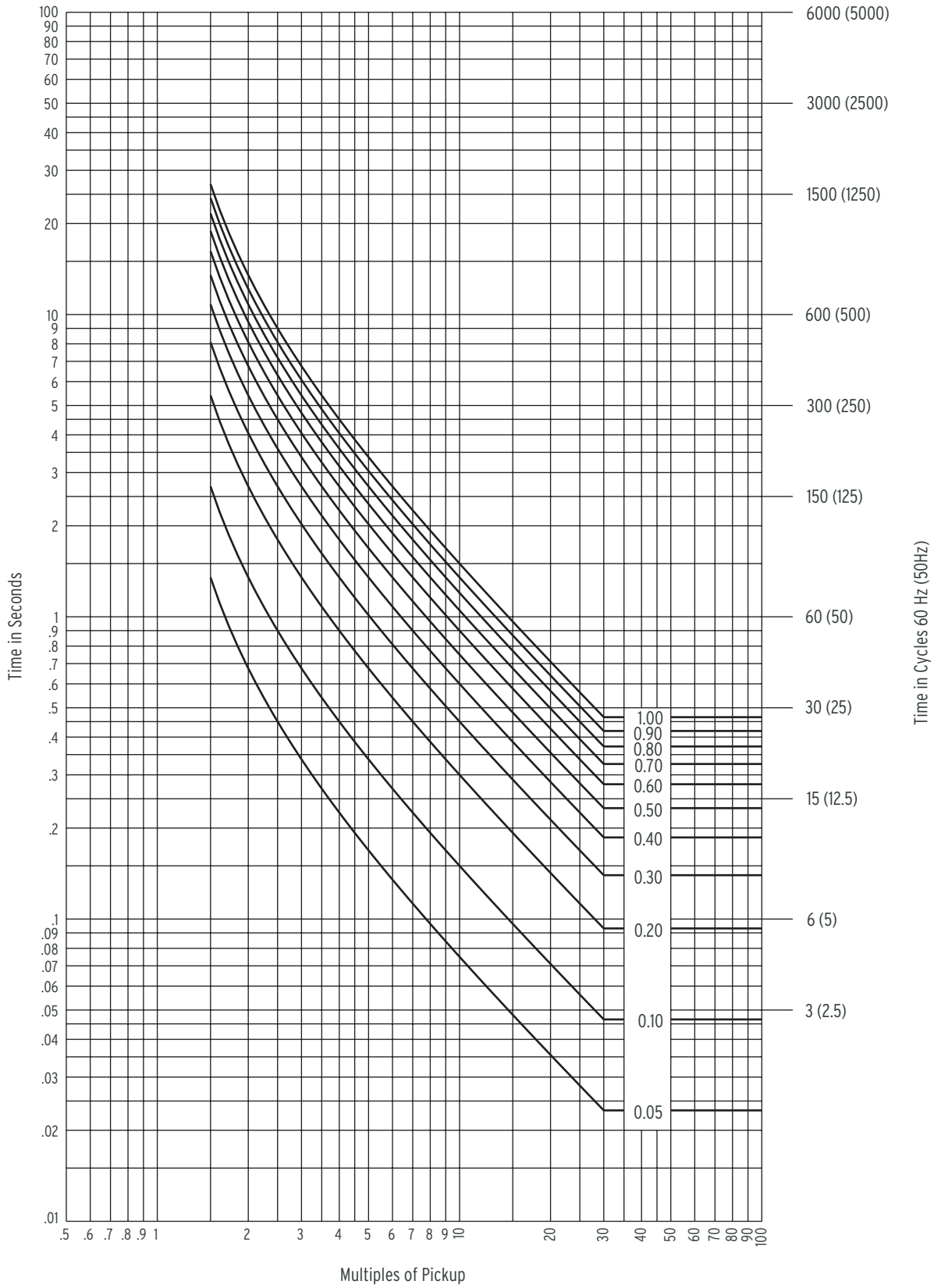

Figure 4.7 I.E.C. Class B Curve (Very Inverse): C2

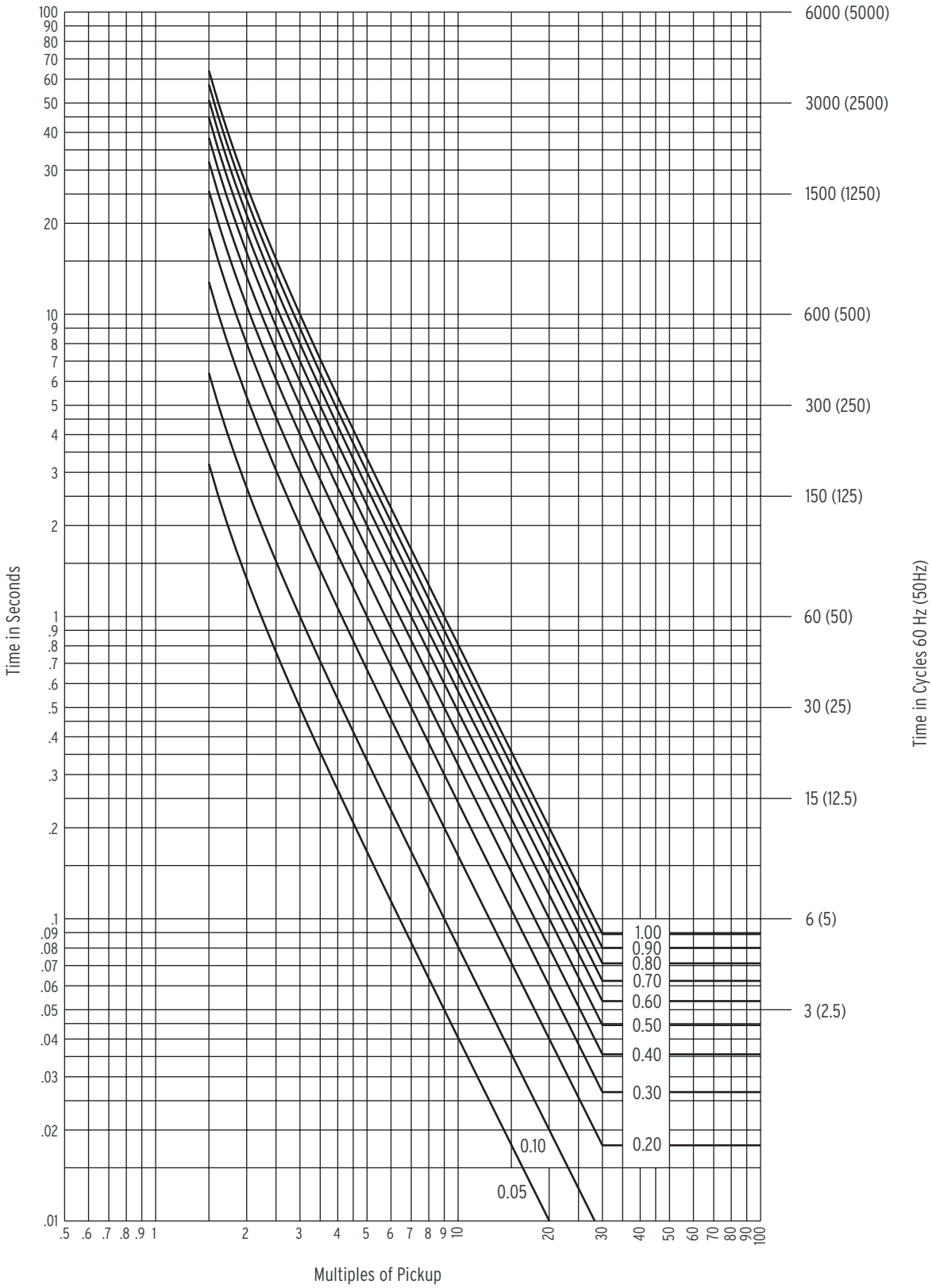

Figure 4.8 I.E.C. Class C Curve (Extremely Inverse): C3

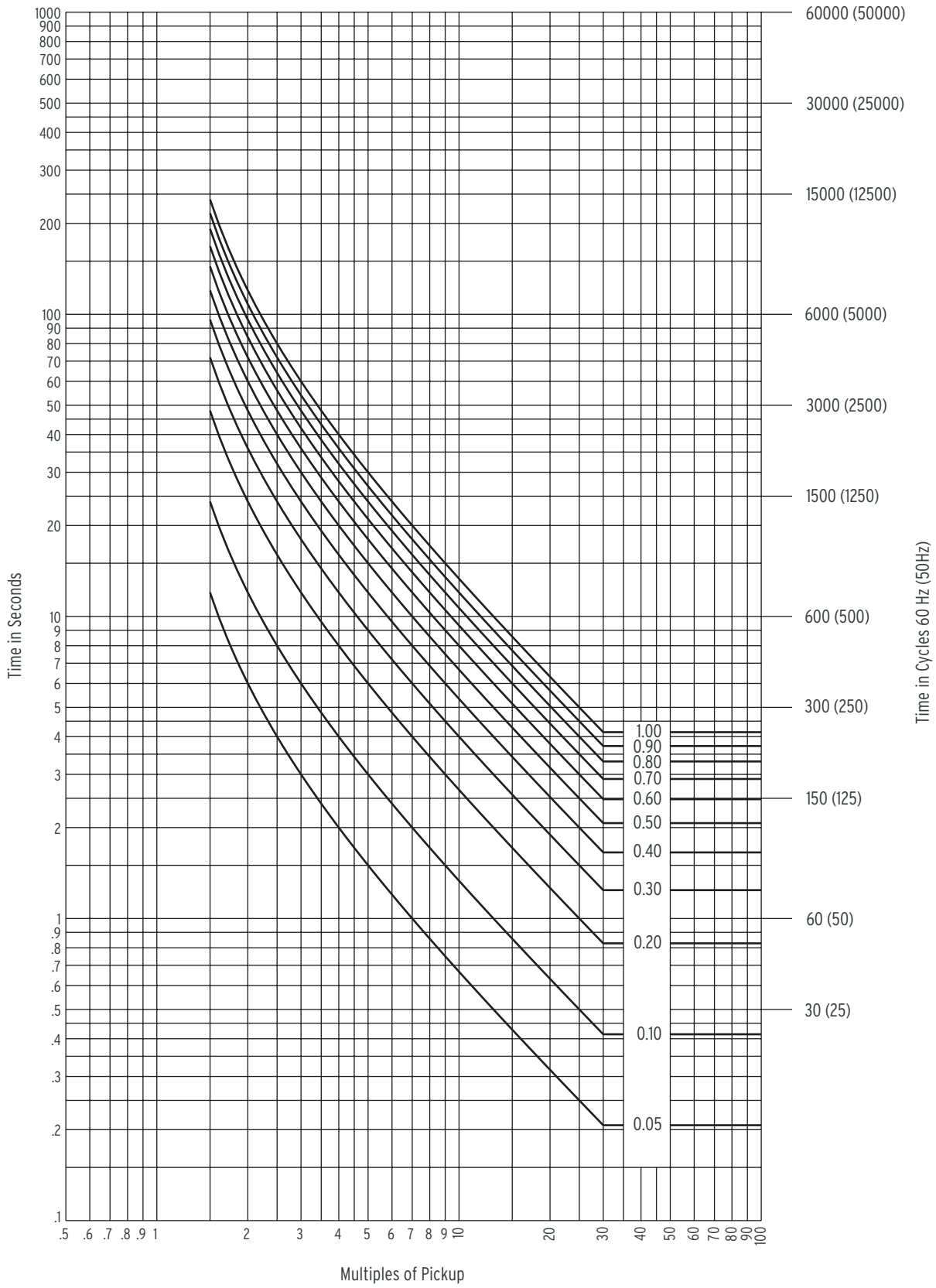

Figure 4.9 I.E.C. Long-Time Inverse Curve: C4

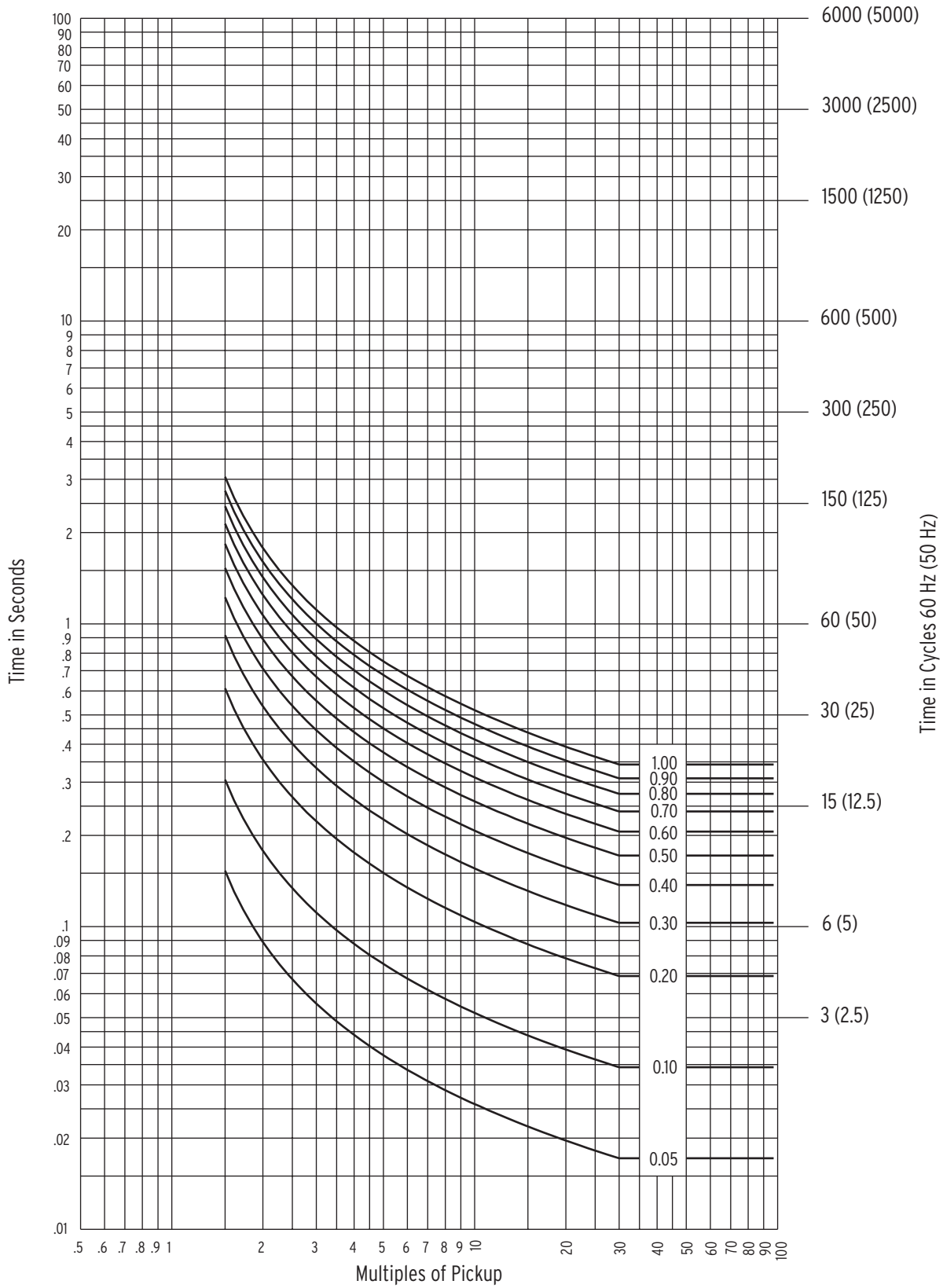

Figure 4.10 I.E.C. Short-Time Inverse Curve: C5

Relay Word Bit Setting Reference Information

Relay Word bits are used in SELOGIC control equation settings. See *Section 3: Relay Elements and Logic* for SELOGIC control equations details and examples. SELOGIC control equation settings can also be set directly to 1 (logical 1) or 0 (logical 0).

The Relay Word bit row numbers correspond to the row numbers used in the **TAR** command [see *TAR Command (Target) on page 5.23*].

Table 4.5 SEL-551C Relay Word Bits

Row[a]	SEL-551C Relay Word Bits							
1	51P1	51P2	51N1	51G1	51P1T	51P2T	51N1T	51G1T
2	51Q1	51Q2	51Q1T	51Q2T	50P1	50P2	50P3	50P4
3	50P5	50P6	50N1	50N2	50G1	50G2	50Q1	50Q2
4	50A	50B	50C	*[b]	*[b]	OC	CC	CF
5	LB1	LB2	LB3	LB4	LB5	LB6	LB7	LB8
6	RB1	RB2	RB3	RB4	RB5	RB6	RB7	RB8
7	SV1	SV2	SV3	SV4	SV5	SV6	SV7	SV8
8	SV9	SV10	SV11	SV12	SV13	SV14	*[b]	*[b]
9	79RS	79CY	79LO	SH0	SH1	SH2	SH3	SH4
10	TRIP	CLOSE	51P1R	51P2R	51N1R	51G1R	51Q1R	51Q2R
11	SV5T	SV6T	SV7T	SV8T	SV9T	SV10T	SV11T	SV12T
12	SV13T	SV14T	*[b]	SALARM	HALARM	OUT1	OUT2	OUT3
13	PDEM	NDEM	GDEM	QDEM	TRGTR	*[b]	*[b]	*[b]
14	LT1	LT2	LT3	LT4	LT5	LT6	LT7	LT8
15	IN1	IN2	IN3	IN4	IN5	IN6	*[b]	*[b]

[a] Row 0 used for front-panel LEDs and TAR command as shown in Table 5.6. Row 0 targets are not available for SELOGIC control equations.
[b] Reserved for future use.

Table 4.6 Relay Word Bit Definitions (Sheet 1 of 5)

Row	Bit	Definition	Primary Application
1	51P1	Maximum phase current above pickup setting 51P1P for phase time-overcurrent element 51P1T (see *Figure 3.9*)	Event report triggering, Testing
	51P2	Maximum phase current above pickup setting 51P2P for phase time-overcurrent element 51P2T (see *Figure 3.9*)	
	51N1	Neutral ground current (channel IN) above pickup setting 51N1P for neutral ground time-overcurrent element 51N1T (see *Figure 3.10*)	
	51G1	Residual ground current above pickup setting 51G1P for residual ground time-overcurrent element 51G1T (see *Figure 3.11*)	
	51P1T	1st phase time-overcurrent element timed out (see *Figure 3.9*)	Tripping
	51P2T	2nd phase time-overcurrent element timed out (see *Figure 3.9*)	
	51N1T	Neutral ground time-overcurrent element timed out (see *Figure 3.10*)	
	51G1T	Residual ground time-overcurrent element timed out (see *Figure 3.11*)	

Table 4.6 Relay Word Bit Definitions (Sheet 2 of 5)

Row	Bit	Definition	Primary Application
2	51Q1[a]	Negative-sequence current above pickup setting 51Q1P for negative-sequence time-overcurrent element 51Q1T (see *Figure 3.12*)	Event report triggering, Testing
	51Q2[a]	Negative-sequence current above pickup setting 51Q2P for negative-sequence time-overcurrent element 51Q2T (see *Figure 3.12*)	
	51Q1T[a]	First negative-sequence time-overcurrent element timed out (see *Figure 3.12*)	Tripping
	51Q2T[a]	Second negative-sequence time-overcurrent element timed out (see *Figure 3.12*)	
	50P1	First phase instantaneous overcurrent element picked up (see *Figure 3.4*)	
	50P2	Second phase instantaneous overcurrent element picked up (see *Figure 3.4*)	
	50P3	Third phase instantaneous overcurrent element picked up (see *Figure 3.4*)	
	50P4	Fourth phase instantaneous overcurrent element picked up (see *Figure 3.4*)	
3	50P5	Fifth phase instantaneous overcurrent element picked up (see *Figure 3.4*)	
	50P6	Sixth phase instantaneous overcurrent element picked up (see *Figure 3.4*)	
	50N1	First neutral ground instantaneous overcurrent element picked up (see *Figure 3.6*)	
	50N2	Second neutral ground instantaneous overcurrent element picked up (see *Figure 3.6*)	
	50G1	First residual ground instantaneous overcurrent element picked up (see *Figure 3.7*)	
	50G2	Second residual ground instantaneous overcurrent element picked up (see *Figure 3.7*)	
	50Q1[a]	First negative-sequence instantaneous overcurrent element picked up (see *Figure 3.8*)	
	50Q2[a]	Second negative-sequence instantaneous overcurrent element picked up (see *Figure 3.8*)	
4	50A	Single-phase instantaneous overcurrent element picked up (channel IA; see *Figure 3.5*)	
	50B	Single-phase instantaneous overcurrent element picked up (channel IB; see *Figure 3.5*)	
	50C	Single-phase instantaneous overcurrent element picked up (channel IC; see *Figure 3.5*)	
	OC[b]	Asserts 1/8 cycle for Open Command execution (see *Figure 3.13*)	Circuit breaker status, etc.
	CC[b]	Asserts 1/8 cycle for Close Command execution (see *Figure 3.14*)	
	CF	Close Failure logic output asserted (see *Figure 3.14*)	Indication

Table 4.6 Relay Word Bit Definitions (Sheet 3 of 5)

Row	Bit	Definition	Primary Application
5	LB1	Local Bit 1 asserted (see *Figure 3.2*)	Enable/disable schemes, etc., from the front panel
	LB2	Local Bit 2 asserted (see *Figure 3.2*)	
	LB3	Local Bit 3 asserted (see *Figure 3.2*)	
	LB4	Local Bit 4 asserted (see *Figure 3.2*)	
	LB5	Local Bit 5 asserted (see *Figure 3.2*)	
	LB6	Local Bit 6 asserted (see *Figure 3.2*)	
	LB7	Local Bit 7 asserted (see *Figure 3.2*)	
	LB8	Local Bit 8 asserted (see *Figure 3.2*)	
6	RB1	Remote Bit 1 asserted (see *Figure 3.3*)	Enable/disable schemes, etc., from the serial port
	RB2	Remote Bit 2 asserted (see *Figure 3.3*)	
	RB3	Remote Bit 3 asserted (see *Figure 3.3*)	
	RB4	Remote Bit 4 asserted (see *Figure 3.3*)	
	RB5	Remote Bit 5 asserted (see *Figure 3.3*)	
	RB6	Remote Bit 6 asserted (see *Figure 3.3*)	
	RB7	Remote Bit 7 asserted (see *Figure 3.3*)	
	RB8	Remote Bit 8 asserted (see *Figure 3.3*)	
7	SV1	SELOGIC Variable SV1 asserted (see *Figure 3.21*)	Seal-in functions, etc.
	SV2	SELOGIC Variable SV2 asserted (see *Figure 3.21*)	
	SV3	SELOGIC Variable SV3 asserted (see *Figure 3.21*)	
	SV4	SELOGIC Variable SV4 asserted (see *Figure 3.21*)	
	SV5	SELOGIC Variable SV5 timer input asserted (see *Figure 3.21*)	Seal-in functions, Timing, etc.
	SV6	SELOGIC Variable SV6 timer input asserted (see *Figure 3.21*)	
	SV7	SELOGIC Variable SV7 timer input asserted (see *Figure 3.21*)	
	SV8	SELOGIC Variable SV8 timer input asserted (see *Figure 3.21*)	
8	SV9	SELOGIC Variable SV9 timer input asserted (see *Figure 3.21*)	
	SV10	SELOGIC Variable SV10 timer input asserted (see *Figure 3.21*)	
	SV11	SELOGIC Variable SV11 timer input asserted (see *Figure 3.21*)	
	SV12	SELOGIC Variable SV12 timer input asserted (see *Figure 3.21*)	
	SV13	SELOGIC Variable SV13 timer input asserted (see *Figure 3.21*)	
	SV14	SELOGIC Variable SV14 timer input asserted (see *Figure 3.21*)	
9	79RS	Reclosing relay in the Reset State (see *Figure 3.15* and *Table 3.5*)	Tripping scheme supervision, Indication
	79CY	Reclosing relay in the Reclose Cycle State (see *Figure 3.15* and *Table 3.5*)	
	79LO	Reclosing relay in the Lockout State (see *Figure 3.15* and *Table 3.5*)	
	SH0	Reclosing relay shot counter = 0 (see *Table 3.6*)	
	SH1	Reclosing relay shot counter = 1 (see *Table 3.6*)	
	SH2	Reclosing relay shot counter = 2 (see *Table 3.6*)	
	SH3	Reclosing relay shot counter = 3 (see *Table 3.6*)	
	SH4	Reclosing relay shot counter = 4 (see *Table 3.6*)	

Table 4.6 Relay Word Bit Definitions (Sheet 4 of 5)

Row	Bit	Definition	Primary Application
10	TRIP	Trip logic output asserted (see *Figure 3.13*)	Output contact assignment
	CLOSE	Close logic output asserted (see *Figure 3.14*)	
	51P1R	First phase time-overcurrent element reset (see *Figure 3.9*)	Testing
	51P2R	Second phase time-overcurrent element reset (see *Figure 3.9*)	
	51N1R	Neutral ground time-overcurrent element reset (see *Figure 3.10*)	
	51G1R	Residual ground time-overcurrent element reset (see *Figure 3.11*)	
	51Q1R	First negative-sequence time-overcurrent element reset (see *Figure 3.12*)	
	51Q2R	Second negative-sequence time-overcurrent element reset (see *Figure 3.12*)	
11	SV5T	SELOGIC Variable timer output asserted (see *Figure 3.21*)	Timing
	SV6T	SELOGIC Variable timer output asserted (see *Figure 3.21*)	
	SV7T	SELOGIC Variable timer output asserted (see *Figure 3.21*)	
	SV8T	SELOGIC Variable timer output asserted (see *Figure 3.21*)	
	SV9T	SELOGIC Variable timer output asserted (see *Figure 3.21*)	
	SV10T	SELOGIC Variable timer output asserted (see *Figure 3.21*)	
	SV11T	SELOGIC Variable timer output asserted (see *Figure 3.21*)	
	SV12T	SELOGIC Variable timer output asserted (see *Figure 3.21*)	
12	SV13T	SELOGIC Variable timer output asserted (see *Figure 3.21*)	
	SV14T	SELOGIC Variable timer output asserted (see *Figure 3.21*)	
	SALARM	Software alarm. Also asserts momentarily for one (1) second for access level changes or if the password is entered incorrectly three times in a row. Also asserts momentarily for settings change.	Indication
	HALARM	Hardware alarm—see *Table 8.3*.	
	OUT1[c]	Output contact OUT1 asserted (see *Figure 3.23*)	
	OUT2[c]	Output contact OUT2 asserted (see *Figure 3.23*)	
	OUT3[c]	Output contact OUT3 asserted (see *Figure 3.23*)	
13	PDEM	Phase demand current above pickup setting PDEMP (see *Figure 3.26*)	
	NDEM	Neutral ground demand current above pickup setting NDEMP (see *Figure 3.26*)	
	GDEM	Residual ground demand current above pickup setting GDEMP (see *Figure 3.26*)	
	QDEM	Negative-sequence demand current above pickup setting QDEMP (see *Figure 3.26*)	
	TRGTR	Target Rest. TRGTR pulses to logical 1 for one processing interval when the **TAR R** (Target Reset) serial port command is executed. TRGTR asserts to logical 1 for as long as the {TARGET RESET} pushbutton is pressed (see *Figure 3.13*).	Control
14	LT1	Latch Bit 1 asserted (see *Figure 3.29*)	Control—replacing traditional latching relays
	LT2	Latch Bit 2 asserted (see *Figure 3.29*)	
	LT3	Latch Bit 3 asserted (see *Figure 3.29*)	
	LT4	Latch Bit 4 asserted (see *Figure 3.29*)	

Table 4.6 Relay Word Bit Definitions (Sheet 5 of 5)

Row	Bit	Definition	Primary Application
	LT5	Latch Bit 5 asserted (see *Figure 3.29*)	
	LT6	Latch Bit 6 asserted (see *Figure 3.29*)	
	LT7	Latch Bit 7 asserted (see *Figure 3.29*)	
	LT8	Latch Bit 8 asserted (see *Figure 3.29*)	
15	IN1	Optoisolated input **IN1** asserted (see *Figure 3.1*)	Circuit breaker status, etc.
	IN2	Optoisolated input **IN2** asserted (see *Figure 3.1*)	
	IN3	Optoisolated input **IN3** asserted (see *Figure 3.1*)	
	IN4	Optoisolated input **IN4** asserted (see *Figure 3.1*)	
	IN5	Optoisolated input **IN5** asserted (see *Figure 3.1*)	
	IN6	Optoisolated input **IN6** asserted (see *Figure 3.1*)	

[a] **IMPORTANT:** See Appendix F: Setting Negative-Sequence Overcurrent Elements for special instructions on setting negative-sequence overcurrent elements.
[b] The Open Command (Relay Word Bit OC) and Close Command (Relay Word Bit CC) are already embedded in the Trip Logic (see Figure 3.13) and Close Logic (see Figure 3.14), respectively. Thus, they are likely not used in SELOGIC control equations. They are in the Relay Word for embedded event report information functions (see Table 7.3).
[c] Output contacts can be a or b-type output contacts (see Figure 2.14 and Figure 3.23)

Settings Explanations

Note that most of the settings in the settings sheets that follow include references for additional information. The following explanations are for relay settings (accessed under the **SET** command) that do not have reference information anywhere else in the instruction manual.

Identifier Labels

The SEL-551C has two identifier labels:

- the Relay Identifier (RID)
- the Terminal Identifier (TID)

The Relay Identifier is typically used to identify the relay or the type of protection scheme. Typical Terminal Identifiers include an abbreviation of the substation name and line terminal.

The relay tags each report (event report, meter report, etc.) with the Relay Identifier and Terminal Identifier. This allows you to distinguish the report as one generated for a specific breaker and substation.

RID and TID settings may include the following characters:

- 0–9
- A–Z,
- -, /, ., space

Current Transformer Ratios

Phase and neutral current transformer ratios are set independently. If IN is connected residually with IA, IB, and IC, then set CTR and CTRN the same. For example, for a CT ratio of 600/5, set CTR = 120.

CT Sizing

Sizing a CT to avoid saturation for the maximum asymmetrical fault is ideal, but not always possible. This requires a CT ANSI voltage classification greater than (1 + X/R) times the burden voltage for the maximum symmetrical fault current, where X/R is the reactance-to-resistance ratio of the primary system.

Use caution when selecting CTs for saturation conditions. If you apply the SEL-551C in high-fault current situations, such as in power plant auxiliary buses with as much as 40000 A of line-to-line fault current, current transformers used with the SEL-551C should meet the following criterion:

$$262.5 \geq \left(\frac{X}{R} + 1\right) \bullet I_f \bullet Z_b$$

Equation 4.1

where:

I_f = the maximum fault current in per unit of CT rating
Z_b = the CT burden in per unit of standard burden
X/R = the X/R ratio of the primary fault current

This ensures a two-cycle trip of an instantaneous element set at 80 A. The following examples show how the criterion is used.

Example 1: Maximum Fault Current With an 80 A Instantaneous Setting

Maximum fault current in terms of primary CT and ANSI voltage rating, burden in ohms, and X/R ratio is:

$$I_{MAX} = \frac{262.5}{\left(1 + \frac{X}{R}\right)} \bullet \frac{ANSI}{100 \bullet Z_B} \bullet CT_{RATING}$$

Equation 4.2

Equation 4.2 is an actual-value equation derived from *Equation 4.1* above, where:

I_{MAX} = the maximum primary fault current for line-to-line fault
CT_{RATING} = the CT primary rating in amperes
Z_B = the total CT secondary burden in ohms
ANSI = the ANSI voltage classification of CTs

An SEL-551C phase instantaneous overcurrent element is to be set at 80 amps. The relay will be used with a C400, 400:5 current transformer with a 0.50 W ohm total burden. The X/R ratio is 20. Determine the maximum fault current for dependable operation.

The burden is primarily from the CT windings and external leads to the SEL-551C (the SEL-551C has a negligible burden):

Description	Quantity
300 feet full-circuit run of #10 AWG (1.0 Ω /1000-ft)	0.30
CT winding of 80 turns at 0.0025 Ω/turn	+ 0.20
Total burden	0.50 Ω

$$I_{MAX} = \frac{262.5}{\left(1 + \frac{X}{R}\right)} \bullet \frac{ANSI}{100 \bullet Z_B} \bullet CT_{RATING}$$

$$= \frac{262.5}{(1 + 20)} \bullet \frac{400}{100 \bullet 0.50\Omega} \bullet 400$$

$$= 40000 \text{ A}$$

Equation 4.3

Example 2: Minimum CT Rating With an 80 A Instantaneous Setting

CT rating in terms of maximum fault current, X/R ratio, ANSI rating, and burden is:

$$CT_{RATING} = \frac{\left(1 + \frac{X}{R}\right)}{262.5} \bullet \frac{100}{ANSI} \bullet I_{MAX} \bullet Z_B$$

Equation 4.4

With an 80 amp instantaneous setting, what is the minimum CT rating that can be used when the maximum fault current is 40000 amps, X/R = 20, and the burden is 0.50 Ω ohms?

$$CT_{RATING} = \frac{\left(1 + \frac{X}{R}\right)}{262.5} \bullet \frac{100}{ANSI} \bullet I_{MAX} \bullet Z_B$$

$$= \frac{(1 + 20)}{262.5} \bullet \frac{100}{400} \bullet 40000 \bullet 0.50$$

$$= 400 \text{ A}$$

Equation 4.5

Example 3: Determine Whether the Following Application Meets the Above Criteria

Description	Value
CTs used	400:5 A, class C400
Instantaneous element pickup setting	80 A secondary
Maximum current for a line-to-line fault	40000 A primary
X/R ratio	20
Total CT secondary burden	0.50 ohm

Apply *Equation 4.1* to verify if the CTs meet the required criteria.

$$\left(\frac{X}{R}+1\right) \bullet I_f \bullet Z_b = (20+1) \bullet \frac{40000}{400} \bullet \frac{0.50\Omega}{4}$$

$$= 262.5$$

Equation 4.6

The calculation shows that the 400:5 (class C400) CT meets the criteria in *Equation 4.1*.

Other System Parameters

The relay settings NFREQ and PHROT allow you to configure the SEL-551C to your specific system.

- Set NFREQ equal to your nominal power system frequency, either 50 Hz or 60 Hz.
- Set PHROT equal to your power system phase rotation, either ABC or ACB.

Set DATE_F to format the date displayed in relay reports and the front-panel display.

- Set DATE_F to MDY to display dates in Month/Day/Year format.
- Set DATE_F to YMD to display dates in Year/Month/Day format.

Settings Sheets

The settings sheets that follow include the definition and input range for each setting in the relay. Refer to *Overcurrent Elements on page 1.7* for information on 5 A nominal and 1 A nominal ordering options and how they influence overcurrent element setting ranges.

Settings Differences Between the SEL-551 and SEL-551C

The SEL-551C has SELOGIC settings SET*n* (set latch bit LT*n*) and RST*n*:

(reset latch bit LT*n*; *Latch Bits Set/Reset Equations (see Figure 3.29) on page SET.8*)

The SEL-551 has SELOGIC setting OUT4.

The SEL-551C has the settings for the optional front-panel serial communications port:

(*Port Settings (SET P Command and Front Panel) on page SET.12*).

Settings Sheets for the SEL-551C Relay

Relay Settings (SET Command)

Identifier Labels (See Settings Explanations on page 4.21)

Relay Identifier (12 characters)

RID = _____

Terminal Identifier (12 characters)

TID = _____

Current Transformer Ratios (see Settings Explanations on page 4.21)

Phase (IA, IB, IC) Current Transformer Ratio (1–6000)	**CTR**	= _____
Neutral (IN) Current Transformer Ratio (1–6000)	**CTRN**	= _____

Minimum Trip Duration Timer (See Figure 3.13)

Min. Trip Duration Time (0–8000 cycles in 0.125-cycle increments)	**TDURD**	= _____

Phase Instantaneous Overcurrent Elements 50P1–50P6 (see Figure 3.4)

Pickup (OFF, 0.5–80.0 A in 0.1 A increments) (5 A nominal) (OFF, 0.1–16.0 A in 0.1 A increments) (1 A nominal)	**50P1P**	= _____
Pickup (OFF, 0.5–80.0 A in 0.1 A increments) (5 A nominal) (OFF, 0.1–16.0 A in 0.1 A increments) (1 A nominal)	**50P2P**	= _____
Pickup (OFF, 0.5–80.0 A in 0.1 A increments) (5 A nominal) (OFF, 0.1–16.0 A in 0.1 A increments) (1 A nominal)	**50P3P**	= _____
Pickup (OFF, 0.5–80.0 A in 0.1 A increments) (5 A nominal) (OFF, 0.1–16.0 A in 0.1 A increments) (1 A nominal)	**50P4P**	= _____
Pickup (OFF, 0.5–80.0 A in 0.1 A increments) (5 A nominal) (OFF, 0.1–16.0 A in 0.1 A increments) (1 A nominal)	**50P5P**	= _____
Pickup (OFF, 0.5–80.0 A in 0.1 A increments) (5 A nominal) (OFF, 0.1–16.0 A in 0.1 A increments) (1 A nominal)	**50P6P**	= _____

Single-Phase Instantaneous Overcurrent Elements 50A, 50B, 50C (see Figure 3.5)

Pickup (OFF, 0.5–80.0 A in 0.1 A increments) (5 A nominal) (OFF, 0.1–16.0 A in 0.1 A increments) (1 A nominal)	**50ABCP**	= _____

Phase Time-Overcurrent Element 51P1T (see Figure 3.9)

Pickup (OFF, 0.5–16.0 A in 0.1 A increments) (5 A nominal) (OFF, 0.1–3.2 A in 0.1 A increments) (1 A nominal)	**51P1P**	= _____
Curve (U1–U5, C1–C5; see *Figure 4.1–Figure 4.10*)	**51P1C**	= _____
Time Dial 0.50–15.00 for curves U1–U5 0.05–1.00 for curves C1–C5	**51P1TD**	= _____
Electromechanical Reset (Y, N)	**51P1RS**	= _____

Phase Time-Overcurrent Element 51P2T (see Figure 3.9)

Pickup (OFF, 0.5–16.0 A in 0.1 A increments) (5 A nominal) (OFF, 0.1–3.2 A in 0.1 A increments) (1 A nominal)	**51P2P**	= _____
Curve (U1–U5, C1–C5; see *Figure 4.1–Figure 4.10*)	**51P2C**	= _____
Time Dial 0.50–15.00 for curves U1–U5 0.05–1.00 for curves C1–C5	**51P2TD**	= _____
Electromechanical Reset (Y, N)	**51P2RS**	= _____

Neutral Ground Instantaneous Overcurrent Elements 50N1, 50N2 (see Figure 3.6)

Pickup (OFF, 0.5–80.0 A in 0.1 A increments) (5 A nominal) (OFF, 0.1–16.0 A in 0.1 A increments) (1 A nominal)	**50N1P**	= _____
Pickup (OFF, 0.5–80.0 A in 0.1 A increments) (5 A nominal) (OFF, 0.1–16.0 A in 0.1 A increments) (1 A nominal)	**50N2P**	= _____

Neutral Ground Time-Overcurrent Elements 51N1T (see Figure 3.10)

Pickup (OFF, 0.5–16.0 A in 0.1 A increments) (5 A nominal) (OFF, 0.1–3.2 A in 0.1 A increments) (1 A nominal)	**51N1P**	= _____

Curve (U1–U5, C1–C5; see *Figure 4.1–Figure 4.10*)	**51N1C**	= _____
Time Dial 0.50–15.00 for curves U1–U5 0.05–1.00 for curves C1–C5	**51N1TD**	= _____
Electromechanical Reset (Y, N)	**51N1RS**	= _____

Residual Ground Instantaneous Overcurrent Elements 50G1, 50G2 (see Figure 3.7)

Pickup (OFF, 0.5–80.0 A in 0.1 A increments) (5 A nominal) (OFF, 0.1–16.0 A in 0.1 A increments) (1 A nominal)	**50G1P**	= _____
Pickup (OFF, 0.5–80.0 A in 0.1 A increments) (5 A nominal) (OFF, 0.1–16.0 A in 0.1 A increments) (1 A nominal)	**50G2P**	= _____

Residual Ground Time-Overcurrent Elements 51G1T (see Figure 3.11)

Pickup (OFF, 0.5–16.0 A in 0.1 A increments) (5 A nominal) (OFF, 0.1–3.2 A in 0.1 A increments) (1 A nominal)	**51G1P**	= _____
Curve (U1–U5, C1–C5; see *Figure 4.1–Figure 4.10*)	**51G1C**	= _____
Time Dial 0.50–15.00 for curves U1–U5 0.05–1.00 for curves C1–C5	**51G1TD**	= _____
Electromechanical Reset (Y, N)	**51G1RS**	= _____

Negative-Sequence Instantaneous Overcurrent Elements 50Q1, 50Q2 (see Figure 3.8)

IMPORTANT: See Appendix F: Setting Negative-Sequence Overcurrent Elements for information on setting negative-sequence overcurrent elements.

Pickup (OFF, 0.5–80.0 A in 0.1 A increments) (5 A nominal) (OFF, 0.1–16.0 A in 0.1 A increments) (1 A nominal)	**50Q1P**	= _____
Pickup (OFF, 0.5–80.0 A in 0.1 A increments) (5 A nominal) (OFF, 0.1–16.0 A in 0.1 A increments) (1 A nominal)	**50Q2P**	= _____

Negative-Sequence Time Overcurrent Element 51Q1T (see Figure 3.12)

IMPORTANT: See Appendix F: Setting Negative-Sequence Overcurrent Elements for information on setting negative-sequence overcurrent elements.

Pickup (OFF, 0.5–16.0 A in 0.1 A increments) (5 A nominal) (OFF, 0.1–3.2 A in 0.1 A increments) (1 A nominal)	**51Q1P**	= _____
Curve (U1–U5, C1–C5; see *Figure 4.1–Figure 4.10*)	**51Q1C**	= _____
Time Dial 0.50–15.00 for curves U1–U5 0.05–1.00 for curves C1–C5	**51Q1TD**	= _____
Electromechanical Reset (Y, N)	**51Q1RS**	= _____

Negative-Sequence Time Overcurrent Element 51Q2T (see Figure 3.12)

IMPORTANT: See Appendix F: Setting Negative-Sequence Overcurrent Elements for information on setting negative-sequence overcurrent elements.

Pickup (OFF, 0.5–16.0 A in 0.1 A increments) (5 A nominal) (OFF, 0.1–3.2 A in 0.1 A increments) (1 A nominal)	**51Q2P**	= _____
Curve (U1–U5, C1–C5; see *Figure 4.1–Figure 4.10*)	**51Q2C**	= _____
Time Dial 0.50–15.00 for curves U1–U5 0.05–1.00 for curves C1–C5	**51Q2TD**	= _____
Electromechanical Reset (Y, N)	**51Q2RS**	= _____

Reclosing Relay Open Interval Timer (see Reclosing Relay on page 3.25)

Open Interval 1 Time (0–54000 cycles in 0.125 cycle increments)	**79OI1**	= _____
Open Interval 2 Time (0–54000 cycles in 0.125 cycle increments)	**79O12**	= _____
Open Interval 3 Time (0–54000 cycles in 0.125 cycle increments)	**79O13**	= _____
Open Interval 4 Time (0–54000 cycles in 0.125 cycle increments)	**79O14**	= _____

Reclosing Relay Reset Timer (see Reclosing Relay on page 3.25)

Reset Time from Reclose Cycle (0–54000 cycles in 0.125 cycle increments)	**79RSD**	= _____
Reset Time from Lockout (0–54000 cycles in 0.125 cycle increments)	**79RSLD**	= _____

Close Failure Timer (see Figure 3.14)

Close Failure Time (0–54000 cycles in 0.125 cycle increments)	**CFD**	= _____

Demand Ammetering Settings (see Figure 3.24 and Figure 3.26)

Time Constant (5, 10, 15, 30, 60 minutes)	**DMTC**	= _____
Pickup Range		
Phase Pickup		
(OFF, 0.5–16.0 A in 0.1 A increments) (5 A nominal)		
(OFF, 0.1–3.2 A in 0.1 A increments) (1 A nominal)	**PDEMP**	= _____
Neutral Ground Pickup—channel IN		
(OFF, 0.5–16.0 A in 0.1 A increments) (5 A nominal)		
(OFF, 0.1–3.2 A in 0.1 A increments) (1 A nominal)	**NDEMP**	= _____
Residual Ground Pickup		
(OFF, 0.5–16.0 A in 0.1 A increments) (5 A nominal)		
(OFF, 0.1–3.2 A in 0.1 A increments) (1 A nominal)	**GDEMP**	= _____
Negative-Sequence Pickup		
(OFF, 0.5–16.0 A in 0.1 A increments) (5 A nominal)		
(OFF, 0.1–3.2 A in 0.1 A increments) (1 A nominal)	**QDEMP**	= _____

SELOGIC® Variable Timers (see Figure 3.21)

SV5 Pickup Time (0–54000.000 cycles in 0.125-cycle steps)	**SV5PU**	= _____
SV5 Dropout Time (0–54000.000 cycles in 0.125-cycle steps)	**SV5DO**	= _____
SV6 Pickup Time (0–54000.000 cycles in 0.125-cycle steps)	**SV6PU**	= _____
SV6 Dropout Time (0–54000.000 cycles in 0.125-cycle steps)	**SV6DO**	= _____
SV7 Pickup Time (0–54000.000 cycles in 0.125-cycle steps)	**SV7PU**	= _____
SV7 Dropout Time (0–54000.000 cycles in 0.125-cycle steps)	**SV7DO**	= _____
SV8 Pickup Time (0–54000.000 cycles in 0.125-cycle steps)	**SV8PU**	= _____
SV8 Dropout Time (0–54000.000 cycles in 0.125-cycle steps)	**SV8DO**	= _____
SV9 Pickup Time (0–54000.000 cycles in 0.125-cycle steps)	**SV9PU**	= _____
SV9 Dropout Time (0–54000.000 cycles in 0.125-cycle steps)	**SV9DO**	= _____
SV10 Pickup Time (0–54000.000 cycles in 0.125-cycle steps)	**SV10PU**	= _____
SV10 Dropout Time (0–54000.000 cycles in 0.125-cycle steps)	**SV10DO**	= _____
SV11 Pickup Time (0–54000.000 cycles in 0.125-cycle steps)	**SV11PU**	= _____
SV11 Dropout Time (0–54000.000 cycles in 0.125-cycle steps)	**SV11DO**	= _____
SV12 Pickup Time (0–54000.000 cycles in 0.125-cycle steps)	**SV12PU**	= _____
SV12 Dropout Time (0–54000.000 cycles in 0.125-cycle steps)	**SV12DO**	= _____

SV13 Pickup Time (0–54000.000 cycles in 0.125-cycle steps)	**SV13PU**	=_____
SV13 Dropout Time (0–54000.000 cycles in 0.125-cycle steps)	**SV13DO**	=_____
SV14 Pickup Time (0–54000.000 cycles in 0.125-cycle steps)	**SV14PU**	=_____
SV14 Dropout Time (0–54000.000 cycles in 0.125-cycle steps)	**SV14DO**	=_____

Other System Parameters (see Settings Explanations on page 4.21)

Nominal Frequency (50, 60 Hz)	**NFREQ**	=_____
Phase Rotation (ABC, ACB)	**PHROT**	=_____
Date Format (MDY, YMD)	**DATE_F**	=_____

SELOGIC Control Equation Settings (SET L Command)

SELOGIC® control equations consist of Relay Word Bits (see *Table 4.5* and *Table 4.6*) and SELOGIC operators * (AND), + (OR), ! (NOT), and ( ) (parentheses). See *Section 3: Relay Elements and Logic* for SELOGIC control equations details and examples. SELOGIC control equation settings can also be set directly to 1 (logical 1) or 0 (logical 0).

Trip Logic (see Figure 3.13)

Trip Conditions	**TR**	= _____
Unlatch Trip Conditions	**ULTR**	= _____

Torque Control for Time-Overcurrent Elements (see Figure 3.9–Figure 3.12)

NOTE: Torque control equation settings cannot be set directly to logical 0.

Phase Element 51P1T	**51P1TC**	= _____
Phase Element 51P2T	**51P2TC**	= _____
Neutral Ground Element 51N1T	**51N1TC**	= _____
Residual Ground Element 51G1T	**51G1TC**	= _____
Negative-Sequence Element 51Q1T	**51Q1TC**	= _____
Negative-Sequence Element 51Q2T	**51Q2TC**	= _____

Close Logic (see Figure 3.14)

Circuit Breaker Status	**52A**	= _____
Close Conditions (other than automatic reclosing or **CLOSE** command)	**CL**	= _____
ULCL Unlatch Close Conditions	**ULCL**	= _____

Reclosing Relay (see Reclosing Relay on page 3.25)

Reclose Initiate	**79RI**	= _____
Reclose Initiate Supervision	**79RIS**	= _____
Drive to Lockout	**79DTL**	= _____
Drive to Last Shot	**79DLS**	= _____
Skip Shot	**79SKP**	= _____
Stall Open Interval Timing	**79STL**	= _____
Block Reset Timing	**79BRS**	= _____
Sequence Coordination	**79SEQ**	= _____

Latch Bits Set/Reset Equations (see Figure 3.29)

Set Latch Bit LT1	**SET1**	= _____
Reset Latch Bit LT1	**RST1**	= _____
Set Latch Bit LT2	**SET2**	= _____
Reset Latch Bit LT2	**RST2**	= _____
Set Latch Bit LT3	**SET3**	= _____
Reset Latch Bit LT3	**RST3**	= _____
Set Latch Bit LT4	**SET4**	= _____
Reset Latch Bit LT4	**RST4**	= _____
Set Latch Bit LT5	**SET5**	= _____
Reset Latch Bit LT5	**RST5**	= _____
Set Latch Bit LT6	**SET6**	= _____
Reset latch Bit LT6	**RST6**	= _____
Set Latch Bit LT7	**SET7**	= _____
Reset Latch Bit LT7	**RST7**	= _____
Set Latch Bit LT8	**SET8**	= _____
Reset Latch Bit LT8	**RST8**	= _____

Event Report Trigger Conditions (see Standard 15-Cycle Event Reports on page 7.2)

Event Report Trigger Condition 1	**ER1**	= _____
Event Report Trigger Condition 2	**ER2**	= _____

SELOGIC Variables (see Figure 3.21)

SELOGIC Variable SV1	**SV1**	= _____
SELOGIC Variable SV2	**SV2**	= _____
SELOGIC Variable SV3	**SV3**	= _____
SELOGIC Variable SV4	**SV4**	= _____

SELOGIC Variable Timer Inputs (see Figure 3.21)

SELOGIC Variable SV5	**SV5**	= _____
SELOGIC Variable SV6	**SV6**	= _____
SELOGIC Variable SV7	**SV7**	= _____
SELOGIC Variable SV8	**SV8**	= _____

SELOGIC Variable SV9	**SV9**	= _____
SELOGIC Variable SV10	**SV10**	= _____
SELOGIC Variable SV11	**SV11**	= _____
SELOGIC Variable SV12	**SV12**	= _____
SELOGIC Variable SV13	**SV13**	= _____
SELOGIC Variable SV14	**SV14**	= _____

Output Contacts (see Figure 3.23)

Output Contact OUT1	**OUT1**	= _____
Output Contact OUT2	**OUT2**	= _____
Output Contact OUT3	**OUT3**	= _____

Display Points (see Rotating Default Display on page 6.12)

Display Point DP1	**DP1**	= _____
Display Point DP2	**DP2**	= _____
Display Point DP3	**DP3**	= _____
Display Point DP4	**DP4**	= _____
Display Point DP5	**DP5**	= _____
Display Point DP6	**DP6**	= _____
Display Point DP7	**DP7**	= _____
Display Point DP8	**DP8**	= _____

Text Settings (SET T Command)

NOTE: Enter the following characters: 0–9, A–Z, -, /, ., space for each text label setting, subject to the specified character limit. Enter NA to null a label.

Local Bit Labels (See Table 3.3 and Table 3.4)

Local Bit LB1 Name (14 characters)	**NLB1**	= _____
Clear Local Bit LB1 Label (7 characters)	**CLB1**	= _____
Set Local Bit LB1 Label (7 characters)	**SLB1**	= _____
Pulse Local Bit LB1 Label (7 characters)	**PLB1**	= _____
Local Bit LB2 Name (14 characters)	**NLB2**	= _____
Clear Local Bit LB2 Label (7 characters)	**CLB2**	= _____
Set Local Bit LB2 Label (7 characters)	**SLB2**	= _____
Pulse Local Bit LB2 Label (7 characters)	**PLB2**	= _____
Local Bit LB3 Name (14 characters)	**NLB3**	= _____
Clear Local Bit LB3 Label (7 characters)	**CLB3**	= _____
Set Local Bit LB3 Label (7 characters)	**SLB3**	= _____
Pulse Local Bit LB3 Label (7 characters)	**PLB3**	= _____
Local Bit LB4 Name (14 characters)	**NLB4**	= _____
Clear Local Bit LB4 Label (7 characters)	**CLB4**	= _____
Set Local Bit LB4 Label (7 characters)	**SLB4**	= _____
Pulse Local Bit LB4 Label (7 characters)	**PLB4**	= _____
Local Bit LB5 Name (14 characters)	**NLB5**	= _____
Clear Local Bit LB5 Label (7 characters)	**CLB5**	= _____
Set Local Bit LB5 Label (7 characters)	**SLB5**	= _____
Pulse Local Bit LB5 Label (7 characters)	**PLB5**	= _____
Local Bit LB6 Name (14 characters)	**NLB6**	= _____
Clear Local Bit LB6 Label (7 characters)	**CLB6**	= _____
Set Local Bit LB6 Label (7 characters)	**SLB6**	= _____
Pulse Local Bit LB6 Label (7 characters)	**PLB6**	= _____
Local Bit LB7 Name (14 characters)	**NLB7**	= _____
Clear Local Bit LB7 Label (7 characters)	**CLB7**	= _____
Set Local Bit LB7 Label (7 characters)	**SLB7**	= _____
Pulse Local Bit LB7 Label (7 characters)	**PLB7**	= _____

Local Bit LB8 Name (14 characters)	**NLB8**	= _____
Clear Local Bit LB8 Label (7 characters)	**CLB8**	= _____
Set Local Bit LB8 Label (7 characters)	**SLB8**	= _____
Pulse Local Bit LB8 Label (7 characters)	**PLB8**	= _____

Display Point Labels

Display if DP1 = logical 1 (16 characters)	**DP1_1**	= _____
Display if DP1 = logical 0 (16 characters)	**DP1_0**	= _____
Display if DP2 = logical 1 (16 characters)	**DP2_1**	= _____
Display if DP2 = logical 0 (16 characters)	**DP2_0**	= _____
Display if DP3 = logical 1 (16 characters)	**DP3_1**	= _____
Display if DP3 = logical 0 (16 characters)	**DP3_0**	= _____
Display if DP4 = logical 1 (16 characters)	**DP4_1**	= _____
Display if DP4 = logical 0 (16 characters)	**DP4_0**	= _____
Display if DP5 = logical 1 (16 characters)	**DP5_1**	= _____
Display if DP5 = logical 0 (16 characters)	**DP5_0**	= _____
Display if DP6 = logical 1 (16 characters)	**DP6_1**	= _____
Display if DP6 = logical 0 (16 characters)	**DP6_0**	= _____
Display if DP7 = logical 1 (16 characters)	**DP7_1**	= _____
Display if DP7 = logical 0 (16 characters)	**DP7_0**	= _____
Display if DP8 = logical 1 (16 characters)	**DP8_1**	= _____
Display if DP8 = logical 0 (16 characters)	**DP8_0**	= _____

Reclosing Relay Labels (see Functions Unique to the Front-Panel Interface on page 6.6)

Reclosing Relay Last Shot Label (14 char.)	**79LL**	= _____
Reclosing Relay Shot Counter Label (14 char.)	**79SL**	= _____

Port Settings (SET P Command and Front Panel)

Rear Port (SET P 1) Rear Panel

Port Protocol (SEL, LMD, MOD) **PROTOCOL=** _____

Communications Settings

LMD Prefix (@, #, $, %, &)
[PROTOCOL = LMD only] **PREFIX** = _____

LMD Address (1–99)
[PROTOCOL = LMD only] **ADDRESS** = _____

LMD Settling Time (0–30 seconds)
[PROTOCOL = LMD only] **SETTLE_TIME=** _____

Baud Rate (300, 1200, 2400, 4800, 9600, 19200, 38400)
(38400 not available when PROTOCOL = MOD) **SPEED** = _____

Number Data Bits (7, 8)
[PROTOCOL = SEL or LMD only] **DATA_BITS=** _____

Parity (Odd [O], Even [E], or None [N]) **PARITY** = _____

Stop Bits (1, 2) **STOP** = _____

Modbus Slave ID (1–247)
[PROTOCOL = MOD only] **SLAVE** = _____

Other Rear Port Settings

Timeout (0–30 minutes)
[PROTOCOL = SEL or LMD only] **TIMEOUT** = _____

Send Auto Messages to Port (Y, N)
[PROTOCOL = SEL or LMD only] **AUTO** = _____

Enable Hardware Handshaking (Y, N)
[PROTOCOL = SEL only] **RTS_CTS** = _____

Fast Operate Enable (Y, N)
[PROTOCOL = SEL or LMD only] **FAST_OP** = _____

Front Port F (SET P F or SET P 2)

Port Protocol (SEL, LMD) **PROTOCOL=** _____

Communications Settings

LMD Prefix (@, #, $, %, &)
[PROTOCOL = LMD only] **PREFIX** = _____

LMD Address (1–99)
[PROTOCOL = LMD only] **ADDRESS** = _____

LMD Settling Time (0–30 seconds) **SETTLE_TIME=** _____

Baud Rate (300, 1200, 2400, 4800, 9600, 19200, 38400)	**SPEED**	= _____
Number Data Bits (7, 8) [PROTOCOL = SEL or LMD only]	**DATA_BITS**	= _____
Parity (Odd [O], Even [E], or None [N])	**PARITY**	= _____
Stop Bits (1, 2)	**STOP**	= _____

Other Front Port Settings

Timeout (0–30 minutes) [PROTOCOL = SEL or LMD only]	**TIMEOUT**	= _____
Send Auto Messages to Port (Y, N) [PROTOCOL = SEL or LMD only]	**AUTO**	= _____
Enable Hardware Handshaking (Y, N) [PROTOCOL = SEL only]	**RTS_CTS**	= _____
Fast Operate Enable (Y, N) [PROTOCOL = SEL or LMD only]	**FAST_OP**	= _____

Protocol Settings

Set PROTOCOL = SEL for standard SEL ASCII protocol.

Set PROTOCOL = LMD for SEL Distributed Port Switch protocol.

Set PROTOCOL = MOD for Modbus® RTU protocol.

Refer to *Appendix C: SEL Distributed Port Switch Protocol* for details on the LMD protocol.

Refer to *Appendix G: Modbus RTU Communications Protocol* for details on Modbus.

Other Port Settings

Set TIMEOUT to the number of seconds of serial port inactivity for an automatic log out. Set TIMEOUT = 0 for no port time-out.

Set AUTO = Y to allow automatic messages at the serial port.

Set RTS_CTS = Y to enable hardware handshaking. With RTS_CTS = Y, the relay will not send characters until the CTS input is asserted. Also, if the relay is unable to receive characters, it deasserts the RTS line. Setting RTS_CTS is not applicable for EIA-485 serial port option.

Set FAST_OP = Y to enable binary Fast Operate messages at the serial port. Set FAST_OP = N to block binary Fast Operate messages. Refer to *Appendix D: Configuration, Fast Meter, and Fast Operate Commands* for the description of the SEL-551C Fast Operate commands.

Sequential Events Recorder Settings (SET R Command)

NOTE: Sequential Events Recorder settings consist of three trigger lists. Each trigger list can include up to 24 Relay Word bits delimited by spaces or commas. See Sequential Events Recorder (SER) Event Report on page 7.10.

NOTE: Relay Word bits for the SEL-551C in Row 13 of Table 4.5 cannot be used in the following SER settings.

SER Trigger List 1	**SER1**	= _____
SER Trigger List 2	**SER2**	= _____
SER Trigger List 3	**SER3**	= _____

Section 5

Serial Port Communications and Commands

Overview

The SEL-551C Relay is equipped with a serial communications port on the rear panel of the relay. Connect the serial port to a computer serial port for local communications or to a modem for remote communications. Other devices useful for communications include the SEL-2032, the SEL-2030, or the SEL-2020 Communications Processor.

You can use a variety of terminal emulation programs on your personal computer to communicate with the relay.

The SEL-551C can be ordered with either an EIA-232 or EIA-485 (4-wire) rear-panel serial port. The SEL-551C can also be ordered with an optional EIA-232 front-panel serial port. The default settings for the serial port are:

- Baud Rate = 2400
- Data Bits = 8
- Parity = N
- Stop Bits = 1

To change the port settings, use the serial port **SET P** command (see *Section 4: Setting the Relay*) or the front-panel **{SET}** pushbutton.

Port Connector and Communications Cables

Figure 5.1 Nine-Pin Serial Communications Port Connector

Pinouts for EIA-232 and EIA-485 rear-panel serial communications port options are as follows:

Pin	EIA-232 Option	EIA-485 (4-wire) Option
1	N/C or +5 Vdc[a]	+TX
2	RXD	–TX
3	TXD	N/C
4	+IRIG-B	+IRIG-B
5	GND	SHIELD
6	–IRIG-B	–IRIG-B
7	RTS	+RX
8	CTS	–RX
9	GND	SHIELD

[a] Main board jumper JMP2 in the SEL-551C relay; see Section 2: Installation.

Pinouts for the optional front-panel EIA-232 serial communications port for the SEL-551C relay are as follows:

Pin	EIA-232 Option
1	N/C
2	RXD
3	TXD
4	N/C
5	GND
6	N/C
7	RTS
8	CTS
9	GND

The following cable diagrams show several types of EIA-232 serial communications cables. These and other cables are available from SEL. Contact the factory for more information.

SEL-551C to Computer

Cable SEL-C234A

SEL-551C Relay 9-Pin Male "D" Subconnector		*DTE Device 9-Pin Female "D" Subconnector	
Pin Func.	Pin #	Pin #	Pin Func.
RXD	2	3	TXD
TXD	3	2	RXD
GND	5	5	GND
CTS	8	8	CTS
		7	RTS
		1	DCD
		4	DTR
		6	DSR

Cable SEL-C227A

SEL-551C Relay 9-Pin Male "D" Subconnector		*DTE Device 25-Pin Female "D" Subconnector	
Pin Func.	Pin #	Pin #	Pin Func.
GND	5	7	GND
TXD	3	3	RXD
RXD	2	2	TXD
GND	9	1	GND
CTS	8	4	RTS
		5	CTS
		6	DSR
		8	DCD
		20	DTR

*DTE = Data Terminal Equipment (Computer, Terminal, etc.)

SEL-551C to Modem

Cable SEL-C222

SEL-551C Relay 9-Pin Male "D" Subconnector		**DCE Device 25-Pin Female "D" Subconnector	
Pin Func.	Pin #	Pin #	Pin Func.
GND	5	7	GND
TXD	3	2	TXD (IN)
RTS	7	20	DTR (IN)
RXD	2	3	RXD (OUT)
CTS	8	8	CD (OUT)
GND	9	1	GND

**DCE = Data Communications Equipment (Modem, etc.)

SEL-551C to SEL PRTU

Cable SEL-C231

SEL-PRTU 9-Pin Male Round Conxall Pin Func.	Pin #		SEL-551C Relay 9-Pin Male "D" Subconnector Pin #	Pin Func.
GND	1	———	5	GND
TXD	2	———	2	RXD
RXD	4	———	3	TXD
CTS	5	———	7	RTS
+12	7	———	8	CTS
GND	9	———	9	GND

SEL-551C to SEL-2032/SEL-2030/ SEL-2020

Cable SEL-C273A

SEL Communications Processors 9-Pin Male "D" Subconnector Pin Func.	Pin #		SEL-551C Relay 9-Pin Male "D" Subconnector Pin #	Pin Func.
RXD	2	———	3	TXD
TXD	3	———	2	RXD
IRIG+	4	———	4	IRIG+
GND	5	———	5	GND
IRIG-	6	———	6	IRIG-
RTS	7	———	8	CTS
CTS	8	———	7	RTS

Table 5.1 Serial Communications Port Pin Function Definitions

Pin Function	Definition
N/C	No Connection
+5 V dc	5 Volt DC Power Connection
RXD, RX	Receive Data
TXD, TX	Transmit Data
IRIG-B	IRIG-B Time-Code Input
GND	Ground
SHIELD	Shielded Ground
RTS	Request To Send
CTS	Clear To Send
DCD	Data Carrier Detect
DTR	Data Terminal Ready
DSR	Data Set Ready

For long-distance communications up to 500 meters and for electrical isolation of communications ports, use the SEL-2800 or SEL-2810 Fiber-Optic Transceivers. Contact SEL for more details on these devices.

Communications Protocol

Serial communications with the relay includes hardware and software protocols.

Hardware Protocol

SEL-551C relays equipped with an EIA-232 port support RTS/CTS hardware handshaking. RTS/CTS handshaking is not supported on relays equipped with just the EIA-485 port.

To enable hardware handshaking, use the **SET P** command (or front-panel **{SET}** pushbutton) to set RTS_CTS = Y. Disable hardware handshaking by setting RTS_CTS = N.

- If RTS_CTS = N, the relay permanently asserts the RTS line.
- If RTS_CTS = Y, the relay deasserts RTS when it is unable to receive characters.
- If RTS_CTS = Y, the relay does not send characters until the CTS input is asserted.

Software Protocols

Software protocols consist of:

- Standard SEL ASCII
- SEL Distributed Port Switch Protocol (LMD)
- SEL Fast Meter
- SEL Compressed ASCII
- Modbus® RTU

Based upon the port PROTOCOL setting, the relay activates either SEL ASCII, SEL LMD, or Modbus RTU protocol for the given port. SEL Fast Meter and SEL Compressed ASCII commands are always active for the given port if the corresponding protocol is SEL ASCII or LMD. SEL Fast Meter and SEL Compressed ASCII are not available on the port if the protocol is Modbus RTU.

SEL ASCII Protocol

NOTE: The **<Enter>** key on most keyboards is configured to send the ASCII character 13 (^M) for a carriage return. This manual instructs you to press the **Enter** key after commands, which should send the proper ASCII code to the relay.

SEL ASCII protocol is designed for manual and automatic communications.

1. All commands received by the relay must be of the form:

   <command><CR> or <command><CRLF>

   A command transmitted to the relay should consist of the command followed by either a CR (carriage return) or a CRLF (carriage return and line feed). You may truncate commands to the first three characters. For example, **EVENT 1 <Enter>** would become **EVE 1 <Enter>**. Upper- and lower-case characters may be used without distinction, except in passwords.

2. The relay transmits all messages in the following format:

   <STX><MESSAGE LINE 1><CRLF>

   <MESSAGE LINE 2><CRLF>

   •

   •

   •

   <LAST MESSAGE LINE><CRLF>< ETX>

   Each message begins with the start-of-transmission character (ASCII 02) and ends with the end-of-transmission character (ASCII 03). Each line of the message ends with a carriage return and line feed.

3. The relay implements XON/XOFF flow control.

   The relay transmits XON (ASCII hex 11) and asserts the RTS output (if hardware handshaking is enabled) when the relay input buffer drops below 25 percent full.

   The relay transmits XOFF (ASCII hex 13) when the buffer is over 75 percent full. If hardware handshaking is enabled, the relay deasserts the RTS output when the buffer is approximately 95 percent full. Automatic transmission sources should monitor for the XOFF character so they do not overwrite the buffer. Transmission should terminate at the end of the message in progress when XOFF is received and may resume when the relay sends XON.

4. You can use the XON/XOFF protocol to control the relay during data transmission. When the relay receives XOFF during transmission, it pauses until it receives an XON character. If there is no message in progress when the relay receives XOFF, it blocks transmission of any message presented to its buffer. Messages will be accepted after the relay receives XON.

   The CAN character (ASCII hex 18) aborts a pending transmission. This is useful in terminating an unwanted transmission.

Control characters can be sent from most keyboards with the following keystrokes:

XON: **<Ctrl+Q>** (hold down the Control key and press Q)

XOFF: **<Ctrl+S>** (hold down the Control key and press S)

CAN: **<Ctrl+X>** (hold down the Control key and press X)

SEL Distributed Port Switch Protocol (LMD)

The SEL LMD Protocol permits multiple SEL relays to share a common communications channel. The protocol is selected by setting the port setting PROTOCOL = LMD. See *Appendix C: SEL Distributed Port Switch Protocol* for more information on SEL LMD protocol.

SEL Fast Meter Protocol

SEL Fast Meter protocol supports binary messages to transfer metering and control messages. The protocol is described in *Appendix D: Configuration, Fast Meter, and Fast Operate Commands*.

SEL Compressed ASCII Protocol

SEL Compressed ASCII protocol provides compressed versions of some of the relay ASCII commands. The protocol is described in *Appendix E: Compressed ASCII Commands*.

Modbus RTU Protocol

Modbus RTU protocol provides binary multidrop communication with the SEL-551C. The protocol is described in *Appendix G: Modbus RTU Communications Protocol*.

Serial Port Settings

Serial port settings for each protocol are listed in *Table 5.2*.

Table 5.2 Communications Settings (Sheet 1 of 2)

Field Description	Screen Name	Range	Default
PROTOCOL = SEL			
Port Protocol	PROTOCOL	SEL, LMD, MOD	SEL
Baud Rate	SPEED	300, 1200, 2400, 4800, 9600, 19200, 38400	2400
Number Data Bits	DATA_BITS	7, 8	8
Parity	PARITY	O, E, N (O = Odd, E = Even, N = None)	N
Stop Bits	STOP	1, 2	1
Timeout	TIMEOUT	0–30 minutes	15
Automatic Message Output	AUTO	Y or N	N
Enable Hardware Handshaking	RTS/CTS	Y or N	N
Fast Operate Enable	FAST_OP	Y or N	N
PROTOCOL = LMD			
Port Protocol	PROTOCOL	SEL, LMD, MOD	LMD
LMD Prefix	PREFIX	@, #, $, %, &	@
LMD Address	ADDRESS	1–99	1
LMD Settling Time	SETTLE_TIME	0–30 seconds	0
Baud Rate	SPEED	300, 1200, 2400, 4800, 9600, 19200, 38400	2400
Number Data Bits	DATA_BITS	7, 8	8
Parity	PARITY	O, E, N (O = Odd, E = Even, N = None)	N
Stop Bits	STOP	1, 2	1
Timeout	TIMEOUT	0–30 minutes	15
Automatic Message Output	AUTO	Y or N	N
Fast Operate Enable	FAST_OP	Y or N	N

Table 5.2 Communications Settings (Sheet 2 of 2)

Field Description	Screen Name	Range	Default
PROTOCOL = MOD			
Port Protocol	PROTOCOL	SEL, LMD, MOD	MOD
Baud Rate	SPEED	300, 1200, 2400, 4800, 9600, 19200	2400
Parity	PARITY	O, E, N (O = Odd, E = Even, N = None)	N
Stop Bits	STOP	1, 2	1
Modbus Slave ID	SLAVEID	1–247	1

Serial Port Automatic Messages

When the serial port AUTO setting is Y, the relay sends automatic messages to indicate specific conditions. The automatic messages are described in *Table 5.3*.

Table 5.3 Serial Port Automatic Messages

Condition	Description
Power-Up	The relay sends a message containing the present date and time, Relay and Terminal Identifiers, and the Access Level 0 prompt when the relay is turned on.
Event Trigger	The relay sends an event summary each time an event report is triggered. See *Section 7: Standard Event Reports and SER*.
Self-Test Warning or Failure	The relay sends a status report each time a self-test warning or failure condition is detected. See *STA Command (Status) on page 5.21*.

Serial Port Access Levels

Commands can be issued to the relay via the serial port to view metering values, change relay settings, etc. The available serial port commands are listed in *Table 5.4*. The commands can be accessed only from the corresponding access level as shown in *Table 5.4*. The access levels are:

- Access Level 0 (the lowest access level)
- Access Level 1
- Access Level 2 (the highest access level)

Access Level 0

Once serial port communications are established with the relay, the following prompt appears:

```
=
```

This is referred to as Access Level 0. The only commands that can be executed at Access Level 0 are the **ACC** and **QUI** commands (see *Table 5.4*). Enter the **ACC** command at the access level prompt:

```
=ACC <Enter>
```

The **ACC** command allows the relay to go to Access Level 1 [see *ACC and 2AC Commands (Access) on page 5.14* for more detail].

Access Level 1

When the relay is in Access Level 1, the following prompt appears:

```
=>
```

Commands **2AC** through **TRI** in *Table 5.4* can be executed from Access Level 1. For example, enter the **MET** command at the Access Level 1 computer screen prompt to view metering data:

```
=>MET <Enter>
```

The **2AC** command allows the relay to go to Access Level 2 [see *ACC and 2AC Commands (Access)* for more detail]. Enter the **2AC** command at the Access Level 1 prompt:

```
=>2AC <Enter>
```

Access Level 2

When the relay is in Access Level 2, the following prompt appears:

```
=>>
```

Commands **CLO** through **SET** in *Table 5.4* can be executed from Access Level 2. For example, enter the **SET** command at the Access Level 2 prompt to make relay settings:

```
=>>SET <Enter>
```

While in Access Level 2, any of the commands available in the lower access level can also be executed (commands **ACC–TRI** in *Table 5.4*).

Command Summary

Table 5.4 alphabetically lists the serial port commands within a given access level. The SEL-551C Relay Command Summary at the end of this section (and at the end of this manual) has similar information, expanded in detail. Much of the information available from the serial port commands is also available via the front-panel pushbuttons. The correspondence between the serial port commands and the front-panel pushbuttons is also given in *Table 5.4*. See *Section 6: Front-Panel Interface* for more information on the front-panel pushbuttons.

The primary differences between the serial port commands available at Access Level 1 and those available at Access Level 2 are:

- The Access Level 1 commands primarily allow the user to look at information only (e.g., settings, metering, etc.), not change it.
- The Access Level 2 commands primarily allow the user to change settings or operate relay parameters and output contacts.

The commands are shown in upper-case letters, but can also be entered with lower-case letters.

Table 5.4 Serial Port Command Summary

Access Level	Prompt	Serial Port Command	Command Description	Corresponding Front-Panel Pushbutton
0	=	**ACC**	Access Level 1	
1	=>	**2AC**	Access Level 2	
1	=>	**DAT**	View/change date	{OTHER}
1	=>	**EVE**	15-cycle event report	
1	=>	**HIS**	Event summaries	{EVENTS}
1	=>	**IRI**	Synchronize to IRIG-B	
1	=>	**MET**	Metering	{METER}
1	=>	**QUI**	Quit access level	
1	=>	**SER**	Sequential Events Recorder	
1	=>	**SHO**	View settings	{SET}
1	=>	**STA**	Relay self-test status	{STATUS}
1	=>	**TAR**	Relay element status	{OTHER}
1	=>	**TIM**	View/change time	{OTHER}
1	=>	**TRI**	Trigger an event report	
2	=>>	**CLO**	Close breaker	
2	=>>	**CON**	Control remote bits	
2	=>>	**OPE**	Open breaker	
2	=>>	**PAS**	Set passwords	{SET}
2	=>>	**PUL**	Pulse output contacts	{CNTRL}
2	=>>	**SET**	Change relay settings	{SET}
2	=>>	**VER**	Show relay configuration and firmware version	

The relay responds with `Invalid Access Level` if a command is entered from an access level lower than the specified access level for the command. The relay responds:

```
Invalid Command
```

to commands not listed above or entered incorrectly.

The following line of information is listed at the start of the relay response to many of the

commands:

```
FEEDER 1                        Date: 03/05/96    Time: 17:03:26.484
STATION A
```

Relay Response	Definition
`FEEDER 1:`	This is the RID setting (the relay is shipped with the default setting RID = FEEDER 1; see *Identifier Labels on page 4.21*).
`STATION A:`	This is the TID setting (the relay is shipped with the default setting TID = STATION A; see *Identifier Labels*).
`Date:`	This is the date the command response was given [except for relay response to the **EVE** command (Event), where it is the date the event occurred]. You can modify the date display format (Month/Day/Year or Year/Month/Day) by changing the DATE_F relay setting.
`Time:`	This is the time the command response was given (except for relay response to the **EVE** command, where it is the time the event occurred).

The serial port command explanations that follow in *Command Explanations on page 5.14* are in the same order as the commands listed in *Table 5.4*.

Command Explanations

Access Level 0 Commands

ACC and 2AC Commands (Access)

The access commands allow entry to the next higher access levels. Different commands are available at the different access levels (see *Table 5.4*).

Table 5.5 ACC and 2AC Commands

Access Level	Prompt	Corresponding Serial Port Command	Password Level[a]	Brief Command Description
0	=	**ACC**	1	Access—allows entry to Access Level 1
1	=>	**2AC**	2	2Access—allows entry to Access Level 2

[a] If the main board password jumper JMP22 is not in place (JMP22 = OFF), then passwords have to be entered when access level attempts are made.
If the main board password jumper is in place (JMP22 = ON), then passwords do not have to be entered when access level attempts are made.
See PAS Command (Password) on page 5.26 for more information.

Password Requirements

Passwords are required if the main board password jumper **JMP22** is not in place (JMP22 = OFF). Passwords are not required if the main board password jumper **JMP22** is in place (JMP22 = ON). See *Password and Breaker Jumpers on page 2.16*. See *PAS Command (Password)* for more information on passwords.

Access Level Attempt (Password Required). Assume the following conditions exist:

- main board password
- jumper JMP22 = off (passwords required to enter higher access levels)
- Access level = 0 (prompt =)

At the prompt, enter the **ACC** command:

```
=ACC <Enter>
```

Because the main board jumper is not in place, the relay asks for the Access Level 1 password to be entered:

```
Password: ? @@@@@@
```

The relay is shipped with the default Access Level 1 password shown in the table under the *PAS Command (Password)*. At the prompt above, enter the default password and press the **<Enter>** key.

The relay replies:

```
FEEDER 1                          Date: 03/05/96    Time: 08:31:10.361
STATION A


Level 1
=>
```

The => prompt indicates that the relay is now in Access Level 1.

If the entered password is incorrect, the relay asks for the password again (`Password: ?`). The relay will ask up to three times. If the requested password is incorrectly entered three times, the relay closes the **OUT3** contact (SEL-551C with factory settings) for one second and displays the following message:

```
Invalid Password

Access Denied

WARNING: ACCESS BY UNAUTHORIZED PERSONS STRICTLY PROHIBITED
```

Access Level Attempt (Password Not Required). Assume the following conditions exist:

- main board password
- jumper JMP22 = on (passwords not required to enter higher access levels)
- Access level = 0 (prompt =)

At the computer screen prompt, enter the **ACC** command:

```
=ACC <Enter>
```

Because the main board jumper is in place, the relay does not ask for a password; it goes directly to Access Level 1. The relay responds:

```
FEEDER 1                          Date: 03/05/96    Time: 08:31:10.361
STATION A


Level 1
=>
```

The => prompt indicates that the relay is now in Access Level 1.

The above two examples demonstrate how to go from Access Level 0 to Access Level 1. The procedure to go from Access Level 1 to Access Level 2 is much the same, with command 2AC entered at computer screen prompt =>. The relay closes the **OUT3** contact (SEL-551C with factory settings) for one second after a successful level 2 access. If access is denied, the **OUT3** contact also pulses.

Depending on the status of the main board password jumper, an Access Level 2 password may have to be entered, too (`Password: ?`). The relay is shipped with the default Access Level 2 password shown in the table under the *PAS Command (Password) on page 5.26*. Computer screen prompt =>> indicates that the relay has gained Access Level 2.

Access Level 1 Commands

DAT Command (Date)

DAT displays the date stored by the internal calendar/clock. If the date format setting DATE_F is set to MDY, the date is displayed as month/day/year. If the date format setting DATE_F is set to YMD, the date is displayed as year/month/day.

To set the date, type **DATE mm/dd/yy <Enter>** if the DATE_F setting is MDY. If the DATE_F is set to YMD, enter **DATE yy/mm/dd <Enter>**. To set the date to June 1, 1996, enter:

```
=>DATE 6/1/96 <Enter>
6/1/96
=>
```

You can separate the month, day, and year parameters with spaces, commas, slashes, colons, and semicolons.

EVE Command (Event)

Use the **EVE** command to view 15-cycle event reports. See *Section 7: Standard Event Reports and SER* for further details on retrieving event reports.

HIS Command (History)

HIS [*X*] displays the summary of the latest 20 events or allows you to clear the history buffer, which contains the latest 20 events in nonvolatile memory.

If no parameters are specified in the **HIS** command, the relay displays the 20 most recent events in reverse chronological order.

If *X* is a number (1–20), the relay displays the *X* most recent events.

If *X* is C or c, the relay clears the history buffer and all corresponding event reports in nonvolatile memory.

The history report includes: the date and time the event was triggered, the type of event, the recloser shot counter, the maximum phase current in the event, and the front-panel fault type targets if the event was a TRIP type of event. For more information on events and event reports, see *Section 7: Standard Event Reports and SER*.

To display the relay event history, enter the following command:

```
=>HIS <Enter>
```

The relay responds with the event history:

```
FEEDER 1                          Date: 03/05/96    Time: 10:04:27.151
STATION A

#     DATE         TIME       EVENT   SHOT      CURR    TARGETS

1   03/05/96   10:03:49.109   TRIG    2            6
2   02/29/96   16:42:50.746   ER1     2         2487
3   02/29/96   16:16:08.837   ER2     1            5
4   02/29/96   16:16:07.174   TRIP    0         2279   INST A N

=>
```

IRI Command (IRIG)

IRI directs the relay to read the demodulated IRIG-B time code at the serial port input.

To force the relay to synchronize to IRIG-B, enter the following command:

```
=>IRI <Enter>
```

If the relay successfully synchronizes to IRIG, it sends the following header:

```
FEEDER 1                          Date: 03/05/96    Time: 10:15:09.609
STATION A

=>
```

If no IRIG-B code is present at the serial port input or if the code cannot be read successfully, the relay responds:

```
IRIG-B DATA ERROR

=>
```

If an IRIG-B signal is present, the relay continuously synchronizes its internal clock with IRIG-B. It is not necessary to issue the **IRI** command to synchronize the relay clock with IRIG-B. Use the **IRI** command to determine if the relay is properly reading the IRIG-B signal.

MET Command (Meter)

MET displays instantaneous magnitudes and phase angles of the following:

IA:	A-phase current in primary amps
IB:	B-phase current in primary amps
IC:	C-phase current in primary amps
IN:	Measured neutral ground current in primary amps
IG:	Calculated residual current in primary amps
3I2:	Calculated negative-sequence current in primary amps

The SEL-551C reports the phase angles referenced to IA (IA phase angle = 0, positive phase angles leading).

To view instantaneous metering values, enter the command:

```
=>MET n <Enter>
```

where *n* is an optional parameter to specify the number of times to repeat the meter display. The value for *n* may range from 1 to 32767. If *n* is not specified, the relay displays the meter report once:

```
FEEDER 1                          Date: 03/05/96    Time: 10:29:42.609
STATION A
            IA          IB          IC          IN          IG          3I2
A, pri       477         455         492           0          31           35
Degrees     0.00      239.95      120.28      110.18       88.24       275.83

=>
```

MET D Command (Demand Ammeter)

The **MET D** command displays the demand and peak demand values of the following quantities:

Currents	$I_{A,B,C,N}$	Input currents (A primary)
	I_G	Residual ground current (A primary; IG = 3I0 = IA + IB + IC)
	$3I_2$	Negative-sequence current (A primary)
Reset Time	Demand, Peak	Last time the demands and peak demands were reset

To view demand ammetering values, enter the command:

```
=>MET D <Enter>
```

```
=>MET D <Enter>

FEEDER 1                          Date: 02/01/97    Time: 15:08:05.615
STATION A
            IA         IB         IC         IN         IG         3I2
DEMAND     188.6      186.6      191.8       0.2        4.5        4.7
PEAK       188.6      186.6      191.8       0.3        4.5        4.7

LAST DEMAND RESET 01/27/97 15:31:51.238   LAST PEAK RESET 01/27/97 15:31:56.239

=>
```

Reset the accumulated demand values using the **MET RD** command. Reset the peak demand values using the **MET RP** command. For more information on demand ammetering, see *Demand Ammetering on page 3.45*.

QUI Command (Quit)

The **QUI** command returns the relay to Access Level 0.

To return to Access Level 0, enter the command:

```
=>QUI <Enter>
```

The relay sets the port access level to 0. The relay displays the following heading prompt:

```
FEEDER 1                        Date: 03/05/96    Time: 08:55:33.986
STATION A

=
```

The = prompt indicates the relay is back in Access Level 0.

The **QUI** command remaps the front-panel targets to the Relay Targets (TAR 0) and terminates the SEL LMD connection if it is established (see *Appendix C: SEL Distributed Port Switch Protocol*).

SER Command (Sequential Events Recorder)

Use the **SER** command to view Sequential Events Records. For more information on SER reports, see *Section 7: Standard Event Reports and SER*.

SHO Command (Showset)

Use **SHO** to view relay settings.

The **SHO** command format is: **SHO *X Y***

where:

X = the settings class to display

Y = the name of the first setting to display

Valid **SHO** commands include:

Command	Settings Class
SHO	Relay Settings
SHO L	SELOGIC® control equation settings
SHO P 1	Rear Port Settings
SHO P F or SHO P 2	Front Port Settings (optional)
SHO R	Sequential Event Recorder (SER) Settings
SHO T	Text Label Settings

Parameter *Y* is the name of the first setting to display. If *Y* is not specified, all settings are shown in the selected settings class.

Below are sample **SHOWSET** commands, showing all the factory settings for the SEL-551C.

```
=>SHO <Enter>

Relay Settings:
RID   =FEEDER 1     TID   =STATION A
CTR   = 120      CTRN  = 120      TDURD = 9.000
50P1P = 15.0     50P2P = 20.0     50P3P = OFF      50P4P = OFF
50P5P = OFF      50P6P = OFF      50ABCP= OFF
51P1P = 6.0      51P1C = U3       51P1TD= 3.00     51P1RS= N
51P2P = OFF      51P2C = U3       51P2TD= 15.00    51P2RS= N
50N1P = OFF      50N2P = OFF
51N1P = OFF      51N1C = U3       51N1TD= 15.00    51N1RS= N
50G1P = OFF      50G2P = OFF
51G1P = 1.5      51G1C = U3       51G1TD= 1.50     51G1RS= N
50Q1P = OFF      50Q2P = OFF
51Q1P = OFF      51Q1C = U3       51Q1TD= 15.00    51Q1RS= N
51Q2P = OFF      51Q2C = U3       51Q2TD= 15.00    51Q2RS= N
79OI1 = 30.000   79OI2 = 600.000  79OI3 = 0.000    79OI4 = 0.000
79RSD = 1800.000 79RSLD= 300.000  CFD   = 60.000
DMTC  = 5
PDEMP = 5.00     NDEMP = 1.50     GDEMP = 1.50     QDEMP = 1.50
SV5PU = 12.000   SV5DO = 2.000    SV6PU = 0.000    SV6DO = 0.000
SV7PU = 0.000    SV7DO = 0.000    SV8PU = 0.000    SV8DO = 0.000

Press RETURN to continue <Enter>
SV9PU = 0.000    SV9DO = 0.000    SV10PU= 0.000    SV10DO= 0.000
SV11PU= 0.000    SV11DO= 0.000    SV12PU= 0.000    SV12DO= 0.000
SV13PU= 0.000    SV13DO= 0.000    SV14PU= 0.000    SV14DO= 0.000
NFREQ = 60       PHROT = ABC      DATE_F= MDY
```

```
=>SHO L <Enter>

SELogic Control Equations:
TR    =51P1T + 51G1T + 50P1 * SHO + LB3
ULTR  =!(51P1 + 51G1)
51P1TC=1
51P2TC=1
51N1TC=1
51G1TC=1
51Q1TC=1
51Q2TC=1
52A   =IN1
CL    =LB4
ULCL  =TRIP
79RI  =TRIP
79RIS =IN1
79DTL =!LB1 + LB3
79DLS =79LO
79SKP =50P2 * SHO
79STL =TRIP

Press RETURN to continue <Enter>
79BRS =(51P1 + 51G1) * (79RS + 79CY)
79SEQ =0
SET1  =0
RST1  =0
SET2  =0
RST2  =0
SET3  =0
RST3  =0
SET4  =0
RST4  =0
SET5  =0
RST5  =0
SET6  =0
RST6  =0
SET7  =0
RST7  =0
SET8  =0
RST8  =0
ER1   =51P1 + 51G1
ER2   =SV5T + CF

Press RETURN to continue <Enter>
SV1   =0
SV2   =0
SV3   =0
SV4   =0
SV5   =TRIP
SV6   =0
SV7   =0
SV8   =0
SV9   =0
```

(Continued on next page)

(Continued from previous page)

```
SV10  =0
SV11  =0
SV12  =0
SV13  =0
SV14  =0
OUT1  =TRIP
OUT2  =CLOSE
OUT3  =!(SALARM + HALARM)
DP1   =0
DP2   =LB1
DP3   =0

Press RETURN to continue <Enter>
DP4   =IN1
DP5   =0
DP6   =0
DP7   =0
DP8   =0
```

```
=>SHO P <Enter>

PROTOCOL= SEL
SPEED = 2400     DATA_BITS= 8        PARITY= N        STOP  = 1
TIMEOUT= 15       AUTO  = N        RTS_CTS= N        FAST_OP= N
```

```
=>SHO R <Enter>

Sequential Events Recorder trigger lists:
SER1  =51P1 51G1 51P1T 51G1T 50P1 50P2
SER2  =IN1 LB1 LB3 LB4 OUT1 OUT2 OUT3
SER3  =CF 79RS 79LO SV5T
```

```
=>SHO T <Enter>

Text Labels:
NLB1  =RECLOSER       CLB1  =DISABLE SLB1  =ENABLE  PLB1  =
NLB2  =               CLB2  =        SLB2  =        PLB2  =
NLB3  =MANUAL TRIP    CLB3  =RETURN  SLB3  =        PLB3  =TRIP
NLB4  =MANUAL CLOSE   CLB4  =RETURN  SLB4  =        PLB4  =CLOSE
NLB5  =               CLB5  =        SLB5  =        PLB5  =
NLB6  =               CLB6  =        SLB6  =        PLB6  =
NLB7  =               CLB7  =        SLB7  =        PLB7  =
NLB8  =               CLB8  =        SLB8  =        PLB8  =
DP1_1 =                 DP1_0 =
DP2_1 =79 ENABLED       DP2_0 =79 DISABLED
DP3_1 =                 DP3_0 =
DP4_1 =BREAKER CLOSED   DP4_0 =BREAKER OPEN
DP5_1 =                 DP5_0 =
DP6_1 =                 DP6_0 =
DP7_1 =                 DP7_0 =
DP8_1 =                 DP8_0 =
79LL  =SET RECLOSURES 79SL  =RECLOSE COUNT
```

STA Command (Status)

The **STA** command displays the status report, showing the relay self-test information.

To view a status report, enter the command:

```
=>STA N <Enter>
```

where:

N = a number (*N* = 1, 2, 3, ...) that specifies the number of times to repetitively display the status report. If no number is entered after the **STA** command, the relay displays the status report only once.

After the **STA** command is entered, the relay replies with the following status report:

```
FEEDER 1                          Date: 03/05/96    Time: 14:17:01.359
STATION A

FID=SEL-551C-R100-Vr-D960226      CID=00FF

SELF TESTS

W=Warn    F=Fail

       IA       IB       IC       IN       MOF
OS      3        5        3        3        0

       +5V_PS   +5V_REG  -5V_REG  +10V_PS  -10V_PS  VBAT
PS      5.03     5.03    -5.03     10.35   -10.20    2.82

       TEMP     RAM      ROM      CR_RAM   EEPROM
        27.6    OK       OK       OK       OK

 Relay Enabled

=>
```

STA Command Row and Column Definitions

Relay Response	Definition
FID	FID is the firmware identifier string. It identifies the firmware revision.
CID	CID is the firmware checksum identifier.
OS	OS = Offset; displays measured dc offset voltages in millivolts for the current channels. The MOF (master) status is the dc offset in the A/D circuit when a grounded input is selected.
PS	PS = Power Supply; displays power supply voltages in Vdc for the power supply outputs. The +5V_REG and -5V_REG are regulated voltages for the A/D circuit. VBAT displays the Real Time Clock battery voltage.
TEMP	Displays the temperature in degrees Celsius. The temperature sensor is an output of the voltage reference in the A/D circuitry.
RAM, ROM, CR_RAM (critical RAM), and EEPROM	These tests verify the relay memory components. The columns display OK if memory is functioning properly; the columns display FAIL if the memory area has failed. W (Warning) or F (Failure) is appended to the displayed value to indicate an out-of-tolerance condition.

The relay latches all self-test warnings and failures in order to capture transient out-of-tolerance conditions. To reset the self-test statuses, use the **STA C** command from Access Level 2:

```
=>>STA C <Enter>
```

The relay responds:

```
Reboot the relay and clear status
Are you sure (Y/N) ?
```

If you select N or n, the relay displays:

```
Canceled
```

and aborts the command.

If you select Y, the relay displays:

```
Rebooting the relay
```

The relay then restarts (just like powering down, then powering up relay), and all diagnostics are re-run before the relay is enabled.

Refer to *Section 8: Testing and Troubleshooting* for self-test thresholds and corrective actions.

TAR Command (Target)

The **TAR** command remaps the front-panel targets to display Relay Word bit information. It also sends this same information to the serial port. Refer to *Table 5.6* (note the correspondence with *Table 4.5*).

The **TAR** command format is: **TAR *M N***

where:

M = the Relay Word row (1–15) to be displayed,
or 0 (zero) to take the targets back to their normal front-panel target operation,
or R to take the targets back to their normal front-panel target operation (like **TAR 0**), reset the FAULT TYPE targets (INST, A, B, C, and N), and unlatch the trip logic for testing purposes (see *Figure 3.13*)

N = the number of times to repeat the displaying of the selected Relay Word row on the computer screen connected to the serial port. If parameter *N* is not entered, the information displays once on the screen

Parameter *N* does not affect the remapping of the front-panel targets. They are remapped according to parameter *M* and will stay in that new state until a new **TAR** command is executed or the port times out due to port inactivity (see serial port setting TIMEOUT). Port timeout takes the targets back to their normal front-panel target operation (like **TAR 0**).

To prevent the front-panel targets from being remapped by the execution of the **TAR** command, add an X after the Relay Word row parameter. For example, command **TAR 2 X** causes Relay Word row 2 to be sent to the serial port/computer screen, but the front-panel targets remain unchanged-they continue in their normal front-panel target operation mode (like **TAR 0**).

If the **TAR** command is executed from the front panel (see *Figure 6.3*), front-panel timeout is 15 minutes of front-panel keyboard inactivity. Front-panel timeout takes the targets back to their normal front-panel target operation, also (like **TAR 0**).

Table 5.6 SEL-551C Relay Word and Its Correspondence to TAR Command and Front-Panel LEDs

TAR 0 (Front-Panel LEDs)	EN	INST	RS	LO	A	B	C	N
TAR 1	51P1	51P2	51N1	51G1	51P1T	51P2T	51N1T	51G1T
TAR 2	51Q1	51Q2	51Q1T	51Q2T	50P1	50P2	50P3	50P4
TAR 3	50P5	50P6	50N1	50N2	50G1	50G2	50Q1	50Q2
TAR 4	50A	50B	50C	*[a]	*[a]	OC	CC	CF
TAR 5	LB1	LB2	LB3	LB4	LB5	LB6	LB7	LB8
TAR 6	RB1	RB2	RB3	RB4	RB5	RB6	RB7	RB8
TAR 7	SV1	SV2	SV3	SV4	SV5	SV6	SV7	SV8
TAR 8	SV9	SV10	SV11	SV12	SV13	SV14	*[a]	*[a]
TAR 9	79RS	79CY	79LO	SH0	SH1	SH2	SH3	SH4
TAR 10	TRIP	CLOSE	51P1R	51P2R	51N1R	51G1R	51Q1R	51Q2R
TAR 11	SV5T	SV6T	SV7T	SV8T	SV9T	SV10T	SV11T	SV12T
TAR 12	SV13T	SV14T	*[a]	SALARM	HALARM	OUT1	OUT2	OUT3
TAR 13	PDEM	NDEM	GDEM	QDEM	TRGTR	*[a]	*[a]	*[a]
TAR 14	LT1	LT2	LT3	LT4	LT5	LT6	LT7	LT8
TAR 15	IN1	IN2	IN3	IN4	IN5	IN6	*[a]	*[a]

[a] Reserved for future use.

Command **TAR 9 10** is executed in the following example:

```
=>TAR 9 10 <Enter>

79RS   79CY   79LO   SH0    SH1    SH2    SH3    SH4
0      0      1      0      0      1      0      0
0      0      1      0      0      1      0      0
0      0      1      0      0      1      0      0
0      0      1      0      0      1      0      0
0      0      1      0      0      1      0      0
0      0      1      0      0      1      0      0
0      0      1      0      0      1      0      0
0      0      1      0      0      1      0      0

79RS   79CY   79LO   SH0    SH1    SH2    SH3    SH4
0      0      1      0      0      1      0      0
0      0      1      0      0      1      0      0
```

Note that Relay Word bits row 9 is repeated 10 times on the computer display. In this example, the reclosing relay is in the Lockout State (79LO = logical 1), and the shot is at shot = 2 (SH2 = logical 1). Correspondingly, the remapped front-panel targets have the **A** LED illuminated (corresponding to Relay Word Bit 79LO in row 9) and the **N** LED illuminated (corresponding to Relay Word Bit SH2 in row 9).

TIM Command (Time)

TIM displays the relay clock. To set the clock, type **TIM** and the desired setting, then press **<Enter>**. Separate the hours, minutes, and seconds with colons, semicolons, spaces, commas, or slashes. To set the clock to 23:30:00, enter:

```
=>TIM 23:30:00 <Enter>
23:30:00
=>
```

TRI Command (Trigger)

Issue the **TRI** command to generate an event report:

```
=>TRI <Enter>
Triggered

=>
```

See *Section 7: Standard Event Reports and SER* for more information on event reports.

Access Level 2 Commands

CLO Command (Close)

The **CLO** (Close) command asserts the CLOSE Relay Word bit, which can be programmed to an output contact to close circuit breakers. See *Figure 3.14*.

To issue the **CLO** command, enter the following:

```
=>>CLO <Enter>
Close Breaker  (Y/N) ? Y <Enter>
Are you sure (Y/N) ? Y <Enter>
=>>
```

Typing **N <Enter>** after either of the above prompts will abort the command.

The **CLO** command is supervised by main board jumper **JMP24**. If the jumper is not in place (jumper JMP24 = off), the relay does not execute the **CLO** command and responds:

```
Aborted: No Breaker Jumper
```

CON Command (Control)

The **CON** command is a two-step command that allows you to control Relay Word bits RB1–RB8 (see *Figure 3.3*). At the Access Level 2 prompt, type **CON**, a space, and the number of the bit you wish to control (1–8). The relay responds by repeating your command followed by a colon. At the colon, type the Control subcommand you wish to perform (see *Table 5.7*).

The following example shows the steps necessary to pulse Remote Bit 5 (RB5):

```
=>>CON 5 <Enter>
CONTROL RB5: PRB 5 <Enter>
=>>
```

You must enter the same remote bit number in both steps in the command. If the bit numbers do not match, the relay responds:

```
Invalid Command
```

Table 5.7 SEL-551C Control Subcommands

Subcommand	Description
SRB *n*	Set Remote Bit *n* (“ON” position)
CRB *n*	Clear Remote Bit *n* (“OFF” position)
PRB *n*	Pulse Remote Bit *n* for one processing interval (1/8 cycle; “MOMENTARY” position)

See *Remote Control Switches on page 3.9* for more information.

OPE Command (Open)

NOTE: If the **OPE** command is executed (and SELOGIC control equation setting 79RI = TRIP + . . .), the relay goes directly to the Lockout State.

The **OPE** (Open) command asserts the TRIP Relay Word bit, which can be programmed to an output contact to trip circuit breakers. See *Figure 3.13*.

To issue the **OPE** command, enter the following:

```
=>>OPE <Enter>
Open Breaker  (Y/N) ? Y <Enter>
Are you sure (Y/N) ? Y <Enter>
=>>
```

Typing **N <Enter>** after either of the above prompts will abort the command.

The **OPE** command is supervised by main board jumper **JMP24**. If the jumper is not in place (jumper JMP24 = off), the relay does not execute the **OPE** command and responds:

```
Aborted: No Breaker Jumper
```

PAS Command (Password)

⚠WARNING
This device is shipped with default passwords. Default passwords should be changed to private passwords at installation. Failure to change each default password to a private password may allow unauthorized access. SEL shall not be responsible for any damage resulting from unauthorized access.

The factory default passwords for Access Levels 1 and 2 are:

Access Level	Factory Default Password
1	OTTER
2	TAIL

The **PAS** (Password) command allows you to change existing passwords at Access Level 2. To change passwords, enter **PAS *x***, where *x* is the access level of the password being changed. The relay will prompt for the old password, new password, and a confirmation of the new password.

To change the password for Access Level 1, enter the following:

```
=>>PAS 1 <Enter>
Old Password: *******
New Password: ********
Confirm New Password: ********

Password Changed
```

Similarly, **PAS 2** can be used to change the Level 2 password.

The new passwords will not echo on the screen, and passwords cannot be viewed from the device. Record the new passwords in a safe place for future reference.

If the passwords are lost or you wish to operate the relay without password protection, install the main board Password jumper (Password jumper = ON). Refer to *Section 2: Installation* for Password jumper information. While the password protection is disabled by setting the main board Password jumper in place (Password jumper = ON), lost or forgotten passwords can be replaced by new passwords by using the **PAS *x*** command at Access Level 2. The relay will prompt for a new password and a confirmation of the new password.

If you wish to disable password protection for a specific access level (even if the Password jumper is not in place [Password jumper = OFF]), simply set the password to DISABLE. For example, **PAS 1 DISABLE** disables password protection for Access Level 1.

Passwords may include up to 12 characters. See *Table 5.8* for valid characters. Upper- and lowercase letters are treated as different characters. Strong passwords consist of 12 characters, with at least one special character or digit and mixed case sensitivity, but do not form a name, date, acronym, or word. Passwords formed in this manner are less susceptible to password guessing and automated attacks. Examples of valid, distinct strong passwords include:

- Ot3579A24.68
- Ih2dcs4u-Iwg
- .351s.Nt9g-t

Table 5.8 Valid Password Characters

Symbol	Example
Alpha	A B C D E F G H I J K L M N O P Q R S T U V W X Y Z a b c d e f g h i j k l m n o p q r s t u v w x y z
Numeric	0 1 2 3 4 5 6 7 8 9
Special	! " # $ & ' ( ) * , - . / : ; < = > ? @ [\ ] ^ _ { ` } ~

The relay will issue a weak password warning if the new password does not include at least one special character, number, lowercase letter, and an uppercase letter.

```
=>>PAS 1 <Enter>
Old Password: ********

New Password: ********
Confirm New Password: ********

Password Changed
=>>
CAUTION:  This password can be strengthened.  Strong passwords do not include a name,
    date, acronym, or word.  They consist of the maximum allowable characters, with
    at least one special character, number, lower-case letter, and upper-case letter.
    A change in password is recommended.
=>>
```

PUL Command (Pulse)

The **PULSE** command allows you to pulse any of the output contacts for a specified length of time. The command format is:

PUL *X Y*

where:

X = OUT1, OUT2, OUT3

Y = the pulse duration (1–30) in seconds. If *Y* is not specified, the pulse duration defaults to one second

To pulse **OUT1** for five seconds:

```
=>>PUL OUT1 5 <Enter>
Are you sure (Y/N) ? Y <Enter>
=>>
```

If the response to the `Are you sure (Y/N) ?` prompt is `N` or `n`, the command is aborted.

The **PUL** command is supervised by the main board breaker jumper, **JMP24**. If **JMP24** is not in place (jumper JMP24 = off), the relay does not accept the **PUL** command and responds:

```
Aborted:  No Breaker Jumper
```

The relay generates an event report if the **OUT1**, **OUT2**, or **OUT3** contact is pulsed.

The response of a programmable alarm output contact to a **PULSE** command is discussed in the *Output Contacts on page 3.43* (a programmable alarm output contact is available in the SEL-551C Relay).

SET Command

The **SET** command allows the user to view or change the relay settings (see *Table 4.1*).

VER Command (Show Relay Configuration and Firmware Version)

The **VER** command provides relay configuration and information such as nominal current input ratings.

An SEL-551C example printout of the **VER** command follows:

```
=>>VER <Enter>
FID=SEL-551C-R503-Vf-Z001001-D20070301
    CID=81DA
Part Number:  0551C0BX5X1X
SELboot:
    BFID=SELBoot-500-R100
    Checksum:  4660
Mainboard:
    Code FLASH Size:   256 kB
    Data FLASH Size:   128 kB
    RAM Size:          128 kB
    EEPROM Size:         8 kB
Front Panel: Installed
Analog Inputs:
    Currents:      5 Amp Phase
    Currents:      5 Amp Neutral
Boards:
    None
Communications:
    Front Port:    EIA-232
    Rear Port:     EIA-485
Extended Relay Features:
    None
If above information is unexpected,
contact SEL for assistance
=>>
```

SEL-551C Command Summary

Access Level 0 Command	The only thing that can be done at Access level 0 is to go to Access Level 1. The screen prompt is: =
ACC	Enters Access Level 1. If the main board password jumper is not in place, the relay prompts for the entry of the Access Level 1 password in order to enter Access Level 1.

Access Level 1 Command	The Access Level 1 commands primarily allow the user to look at information (e.g., settings, metering, etc.), not change it. The screen prompt is: =>
2AC	Enters Access Level 2. If the main board password jumper is not in place, the relay prompts for the entry of the Access Level 2 password in order to enter Access Level 2.
DAT	Shows date presently in the relay.
DAT *m/d/y*	Enters date in this manner if Date Format setting DATE_F = MDY.
DAT *y/m/d*	Enters date in this manner if Date Format setting DATE_F = YMD.
EVE *n*	Shows standard 15-cycle event report number *n*, with 1/4 cycle resolution (*n* = 1–20, with *n* = 1 most recent).
EVE C *n*	Causes the relay to add digital data at the end of the Event *n* report.
EVE L *n*	Shows standard 15-cycle event report number n, with 1/8 cycle resolution (*n* = 1–20, with *n* = 1 most recent).
EVE L C *n*	Causes the relay to add digital data at the end of Event L *n* report.
EVE R *n*	Causes the relay to display an unfiltered event report with 1/16-cycle resolution.
EVE R C *n*	Causes the relay to add digital data at the end of the Event R *n* report.
HIS *n*	Shows brief summary of the n latest standard 15-cycle event reports.
HIS C	Clears the brief summary and corresponding standard 15-cycle event reports.
IRI	Forces synchronization attempt of internal relay clock to IRIG-B time-code input.
MET *k*	Displays metering data, both magnitude and phase angle. Phase angles are referenced to phase input IA. Enter number *k* to scroll metering k times on screen.
MET D	Displays demand and peak demand data. Select **MET RD** or **MET RP** to reset.
QUI	Quit. Returns to Access Level 0. Returns front-panel LEDs to the default targets (corresponding to command **TAR 0**).
SER *n*	Show the latest *n* rows in the Sequential Events Recorder (SER) event report.
SER *m n*	Show rows *m* through *n* in the Sequential Events Recorder (SER) event report.
SER *d1*	Show rows in the Sequential Events Recorder (SER) event report from date *d1*.
SER *d1 d2*	Show rows in the Sequential Events Recorder (SER) event report from date *d1* to *d2*. Entry of dates is dependent on the Date Format setting DATE_F (= MDY or YMD).
SER C	Clears the Sequential Events Recorder (SER) event report.
SHO	Show relay settings (overcurrent, reclosing, timers, etc.).
SHO L	Show SELOGIC® control equation settings.
SHO P *m*	Show port settings; *m* = port # (1 = rear, 2 or F = front)
SHO R	Show Sequential Events Recorder (SER) settings.
SHO T	Show text label settings.
STA	Show relay self-test status. **STA C** resets self-test warnings/failures.
TAR R	Return front-panel LED targets to regular operation and reset the FAULT TYPE front-panel targets.
TAR 0 *k*	Return front-panel LED targets to regular operation. Enter number *k* to scroll front-panel LED status *k* times on screen.

Access Level 1 Command	The Access Level 1 commands primarily allow the user to look at information (e.g., settings, metering, etc.), not change it. The screen prompt is: =>
TAR *n k*	Display Relay Word row *n* status (*n* = 1–15) on remapped front-panel LED targets. Enter number *k* to scroll Relay Word row *n* status *k* times on screen.
TAR *n* X	Relay Word row *n* status (*n* = 1–15) is sent to the serial port/computer screen, but the front-panel LED targets remain unchanged.
TIM	Show or set time (24-hour time). Show time presently in the relay by entering just **TIM**. Example time 22:47:36 is entered with command **TIM 22:47:36**.
TRI	Trigger an event report.

Access Level 2 Commands	The Access Level 2 commands primarily allow the user to change settings or operate relay parameters and output contacts. All Access Level 1 commands can also be executed from Access Level 2. The screen prompt is: =>>
CLO	Assert the CLOSE Relay Word bit. If CLOSE is assigned to an output contact (e.g., OUT2 = CLOSE), then the output contact will assert if command **CLO** is executed and the circuit breaker is open.
CON *n*	Control Relay Word bit RB*n* (Remote Bit *n*; *n* = 1–8). Execute **CON *n*** and the relay responds: `CONTROL RBn`. Then reply with one of the following: **SRB *n*** set Remote Bit *n* (assert RB*n*) **CRB *n*** clear Remote Bit *n* (deassert RB*n*) **PRB *n*** pulse Remote Bit *n* [assert RB*n* for one processing interval (1/8 cycle)].
OPE	Assert the TRIP Relay Word bit. If TRIP is assigned to an output contact (e.g., OUT1 = TRIP), then the output contact will assert if command **OPE** is executed.
PAS 1	Change Access Level 1 password.
PAS 2	Change Access Level 2 password.
PUL *n k*	Pulse output contact *n* (*n* = `OUT1`, `OUT2`, and `OUT3`). Enter number *k* to pulse for *k* seconds [*k* = 1 to 30 (seconds)], otherwise pulse time is 1 second.
SET *n*	Change relay settings (overcurrent, reclosing, timers, etc.).
SET L *n*	Change SELOGIC control equations settings.
SET P *m n*	Change port settings; *m* = port # (1 = rear, 2 or F = front)
SET R *n*	Change Sequential Events Recorder (SER) settings.
SET T *n*	Change text label settings. For the **SET** commands, jump to parameter *n* to begin setting editing. If parameter *n* is not entered, setting editing starts at the first setting.
VER	Show relay configuration and firmware version.

Section 6

Front-Panel Interface

Overview

This section describes how to get information, make settings, and execute control operations from the relay front panel. It also describes the default displays.

Front-Panel Pushbutton Operation

Overview

Note in *Figure 6.1* that most of the pushbuttons have dual functions (primary/secondary).

A primary function is selected first (e.g., **{METER}** pushbutton).

After a primary function is selected, the pushbuttons then revert to operating on their secondary functions (**{CANCEL}**, **{SELECT}**, left/right arrows, up/down arrows). For example, after the **{METER}** pushbutton is pressed, the up/down arrows are used to scroll through the front-panel metering screens. The primary functions are activated again when the present selected function (metering) is exited (press **{EXIT}** pushbutton) or the display goes back to the default display after 15 minutes of no front-panel activity.

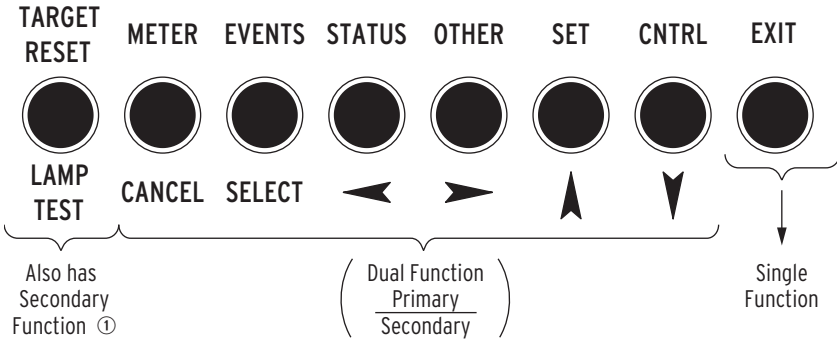

① See Figure 6.3.

Figure 6.1 SEL-551C Front-Panel Pushbuttons—Overview

Primary Functions

Note in *Figure 6.2* and *Figure 6.3* that the front-panel pushbutton primary functions have correspondence to serial port commands—both retrieve the same information or perform the same function. To get more detail on the information provided by the front-panel pushbutton primary functions, refer to the corresponding serial port commands in *Section 5: Serial Port Communications and Commands*. For example, to get more information on the metering values available via the front-panel **{METER}** pushbutton, refer to the *MET Command (Meter) on page 5.17*) and *MET D Command (Demand Ammeter) on page 5.18*.

A few of the front-panel primary functions do not have serial port command equivalents. These are discussed in the following *Functions Unique to the Front-Panel Interface on page 6.6*.

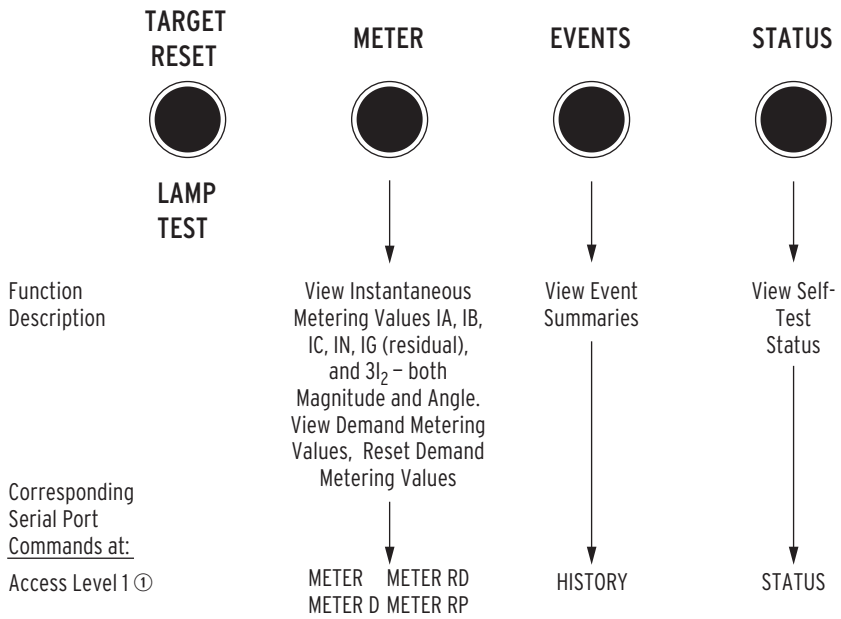

① Front-panel pushbutton functions that correspond to Access Level 1 serial port commands **do not** require the entry of the Access Level 1 password through the front panel.

Figure 6.2 SEL-551C Front-Panel Pushbuttons—Primary Functions

Front-Panel Password Security

Refer to the comments at the bottom of *Figure 6.3* concerning the Access Level 2 password. See *PAS Command (Password) on page 5.26* for more information on passwords.

To enter the Access Level 2 password from the front panel (if required), use the left-right arrow pushbuttons to underscore a password digit position. Use the up/down arrow pushbuttons to then change the digit. Press the **{SELECT}** pushbutton once the correct Access Level 2 password is ready to enter. The factory default passwords for Access Levels 1 and 2 are shown in the table in subsection *PAS Command (Password)*.

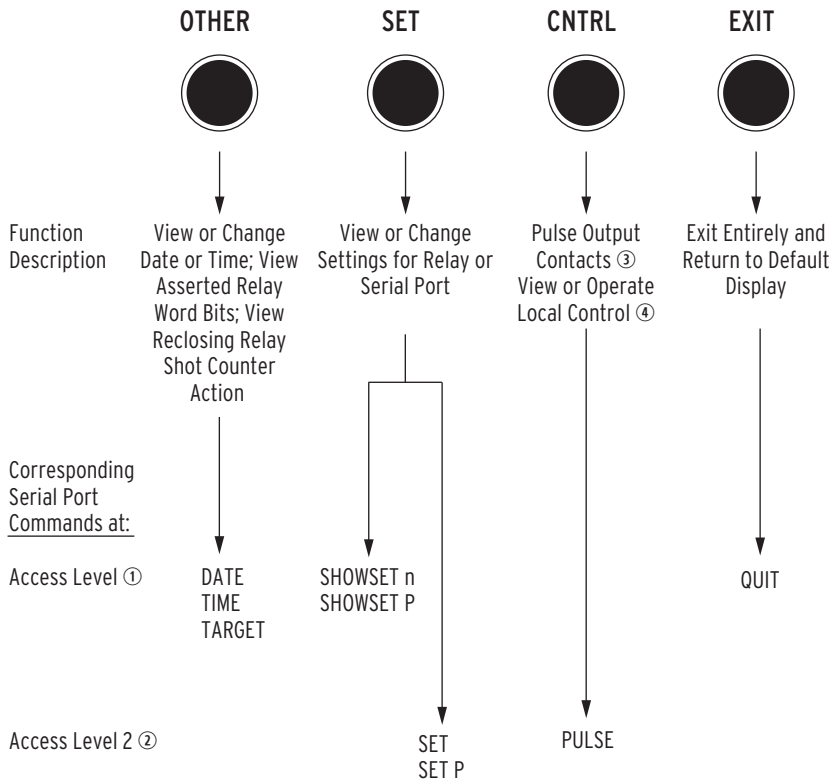

① Front-panel pushbutton functions that correspond to Access Level 1 serial port commands **do not** require the entry of the Access Level 1 password through the front panel.

② Front-panel pushbutton functions that correspond to Access Level 2 serial port commands **do** require the entry of the Access Level 2 password through the front panel **if** main board jumper JMP24 is not in place.

③ Output contacts are pulsed for only one second from the front panel.

④ Local control **is not** available through the serial port and **does not** require the entry of a password.

Figure 6.3 SEL-551C Front-Panel Pushbuttons-Primary Functions (continued)

Secondary Functions

After a primary function is selected (see *Figure 6.2* and *Figure 6.3*), the pushbuttons then revert to operating on their secondary functions (see *Figure 6.4*).

Use the left/right arrows to underscore a desired function. Then press the **{SELECT}** pushbutton to select the function.

Use left/right arrows to underscore a desired setting digit. Then use the up/down arrows to change the digit. After the setting changes are complete, press the **{SELECT}** pushbutton to select/enable the setting.

Press the **{CANCEL}** pushbutton to abort a setting change procedure and return to the previous display.

Press the **{EXIT}** pushbutton to return to the default display and have the primary pushbutton functions activated again (see *Figure 6.2* and *Figure 6.3*).

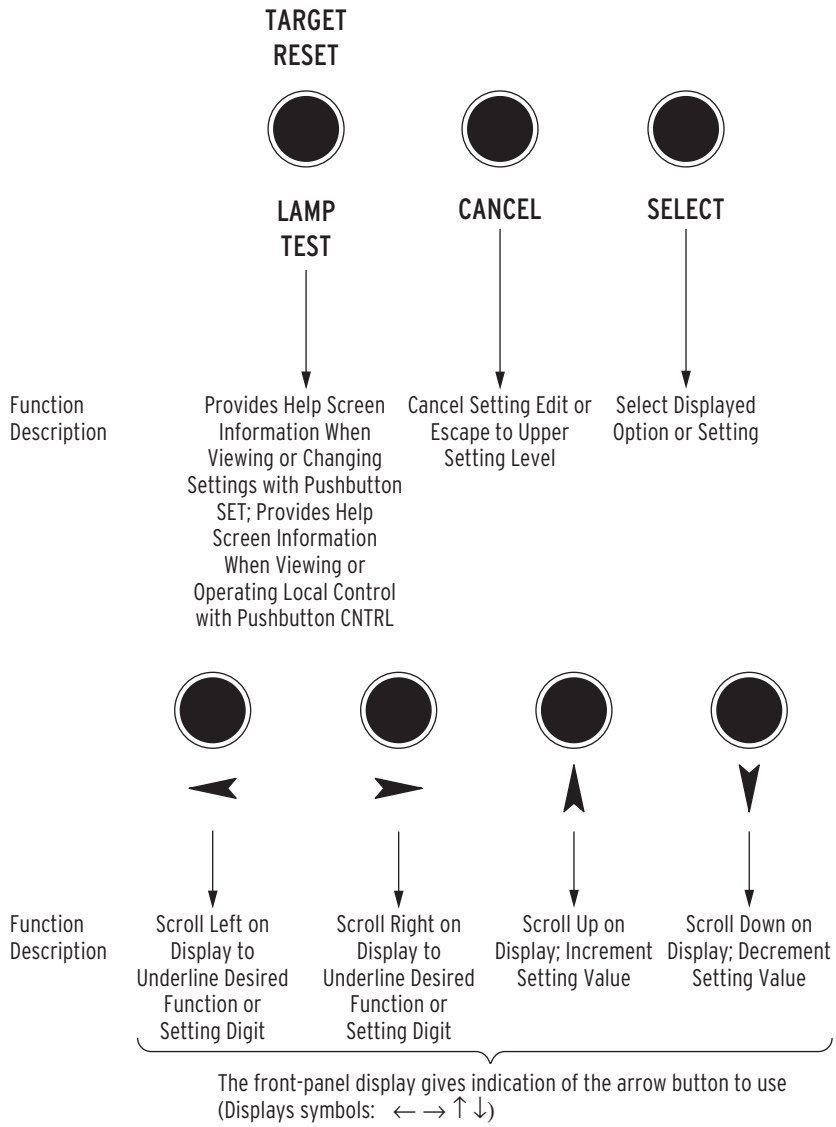

Figure 6.4 SEL-551C Front-Panel Pushbuttons-Secondary Functions

Functions Unique to the Front-Panel Interface

Two front-panel primary functions do not have serial port command equivalents. These are:

- Reclosing relay shot counter screen (accessed via the **{OTHER}** pushbutton)
- Local control (accessed via the **{CNTRL}** pushbutton)

Reclosing Relay Shot Counter Screen

Use this screen to see the progression of the shot counter during reclosing relay testing.

Access the reclosing relay shot counter screen via the **{OTHER}** pushbutton. The following screen appears:

```
OTHER        ←→
DATE TIME 79 TAR
```

Scroll right with the right arrow button and select function 79. Upon selecting function 79, the following screen appears (shown here with factory default settings):

```
SET RECLOSURES=2
RECLOSE COUNT =0
```

or

```
SET RECLOSURES=2
RECLOSE COUNT =2
```

If the reclosing relay does not exist (see *Reclosing Relay on page 3.25*), the following screen appears:

```
No Reclosing set
```

The corresponding text label settings (shown with factory default settings) are:

79LL = SET RECLOSURES (Last Shot Label-limited to 14 characters)

79SL = RECLOSE COUNT (Shot Counter Label-limited to 14 characters)

These text label settings are set with the **SET T** command or viewed with the **SHOWSET T** command via the serial port [see *Section 4: Setting the Relay* and *SHO Command (Showset) on page 5.19*].

The top numeral in the above example screen (SET RECLOSURES = 2) corresponds to the last shot value, which is a function of the number of set open intervals. There are two set open intervals in the factory default settings, thus two reclosures (shots) are possible in a reclose sequence.

The bottom numeral in the above example screen [RECLOSE COUNT = 0 (or = 2)] corresponds to the present shot value. If the breaker is closed and the reclosing relay is reset (**RS** LED on front panel is illuminated), RECLOSE COUNT = 0. If the breaker is open and the reclosing relay is locked out after a reclose sequence (**LO** LED on front panel is illuminated), RECLOSE COUNT = 2.

Reclosing Relay Shot Counter Screen Operation (With Factory Settings)

With the breaker closed and the reclosing relay in the reset state (front-panel **RS** LED illuminated), the reclosing relay shot counter screen appears as:

```
SET RECLOSURES=2
RECLOSE COUNT =0
```

The relay trips the breaker open, and the reclosing relay goes to the reclose cycle state (front-panel **RS** LED extinguishes). The reclosing relay shot counter screen still appears as:

```
SET RECLOSURES=2
RECLOSE COUNT =0
```

The first open interval (79OI1 = 30) times out, the shot counter increments from 0 to 1, and the relay recloses the breaker. The reclosing relay shot counter screen shows the incremented shot counter:

```
SET RECLOSURES=2
RECLOSE COUNT =1
```

The relay trips the breaker open again. The reclosing relay shot counter screen still appears as:

```
SET RECLOSURES=2
RECLOSE COUNT =1
```

The second open interval (79OI2 = 600) times out, the shot counter increments from 1 to 2, and the relay recloses the breaker. The reclosing relay shot counter screen shows the incremented shot counter:

```
SET RECLOSURES=2
RECLOSE COUNT =2
```

If the relay trips the breaker open again, the reclosing relay goes to the lockout state (front-panel **LO** LED illuminates). The reclosing relay shot counter screen still appears as:

```
SET RECLOSURES=2
RECLOSE COUNT =2
```

If the breaker is closed, the reclosing relay reset timer times out (79RSLD = 300), the relay goes to the reset state (front-panel **LO** LED extinguishes and **RS** LED illuminates), and the shot counter returns to 0. The reclosing relay shot counter screen appears as:

```
SET RECLOSURES=2
RECLOSE COUNT =0
```

Local Control

Use local control to enable/disable schemes, trip/close breakers, etc. via the front panel.

In more specific terms, local control asserts (sets to logical 1) or deasserts (sets to logical 0) what are called local bits LB1–LB8. These local bits are available as Relay Word bits and are used in SELOGIC® control equations (see *Table 4.5* and *Table 4.6*).

Local control can emulate the following switch types in *Figure 6.5* through *Figure 6.7*.

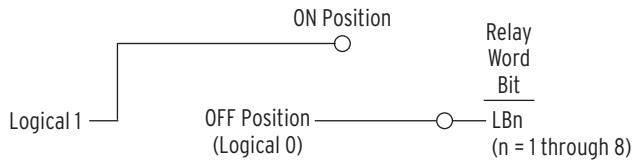

Figure 6.5 Local Control Switch Configured as an ON/OFF Switch

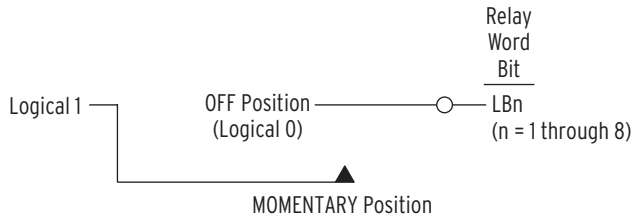

Figure 6.6 Local Control Switch Configured as an OFF/MOMENTARY Switch

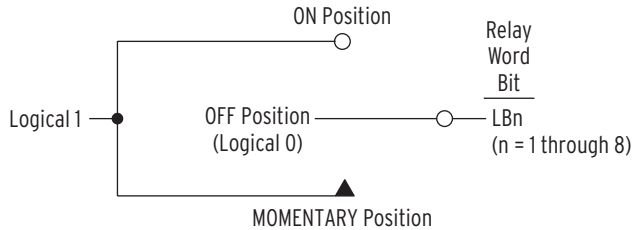

Figure 6.7 Local Control Switch Configured as an ON/OFF/MOMENTARY Switch

Local control switches are created by making corresponding switch position label settings. These text label settings are set with the **SET T** command or viewed with the **SHOWSET T** command via the serial port [see *Section 4: Setting the Relay* and *SHO Command (Showset) on page 5.19*]. See *Local Control Switches on page 3.6* for more information on local control.

View Local Control

Access local control via the **{CNTRL}** pushbutton. If local control switches exist (i.e., corresponding switch position label settings were made), the following message displays with the rotating default display messages.

```
Press CNTRL for
Local Control
```

Press the **{CNTRL}** pushbutton, and the first set local control switch displays (shown here with factory default settings):

```
RECLOSER      ←→
Position:DISABLE
```

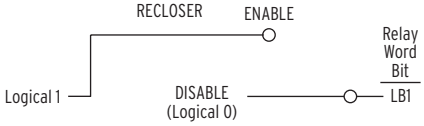

The `RECLOSER: ENABLE/DISABLE` switch is an ON/OFF switch.

Press the right arrow pushbutton, and scroll to the next set local control switch:

```
MANUAL TRIP   ←→
Position: RETURN
```

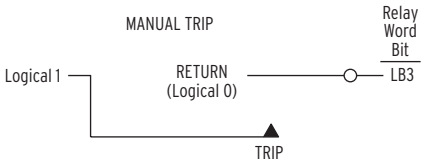

and to the next local control switch:

```
MANUAL CLOSE  ←→
Position: RETURN
```

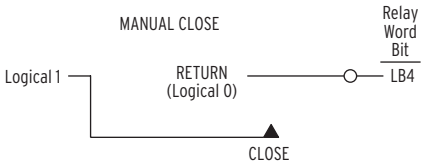

The `MANUAL TRIP: RETURN/TRIP` and `MANUAL CLOSE: RETURN/CLOSE` switches are both OFF/MOMENTARY switches.

There are no more local control switches in the factory default settings. Press the right arrow pushbutton, and scroll to the `Output Contact Testing` function:

```
Output Contact←→
Testing
```

This front-panel function provides the same function as the serial port **PULSE** command (see *Figure 6.3*).

Operate Local Control (With Factory Settings)

Press the right arrow pushbutton, and scroll back to the first set local control switch in the factory default settings:

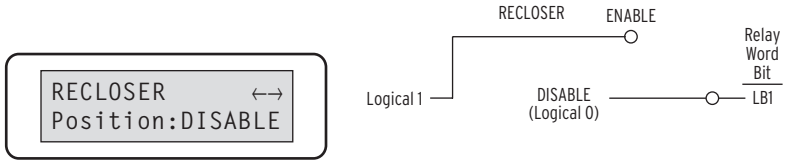

Press the **{SELECT}** pushbutton, and the operate option for the displayed local control switch displays:

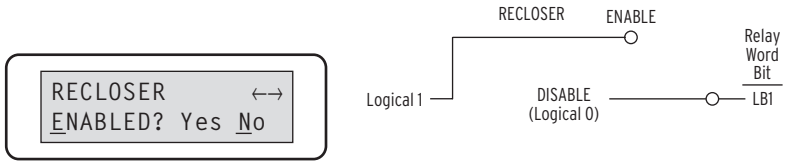

With this first local control switch (`RECLOSER ENABLE/DISABLE`) in the `DISABLE` position, the `ENABLE` position is the only operate option.

Scroll left with the left arrow button and then select `Yes`. The display then shows the new local control switch position:

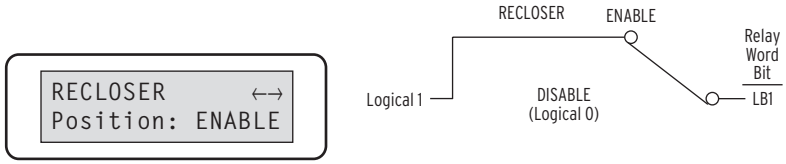

Use the right arrow pushbutton, and scroll to the next set local control switch:

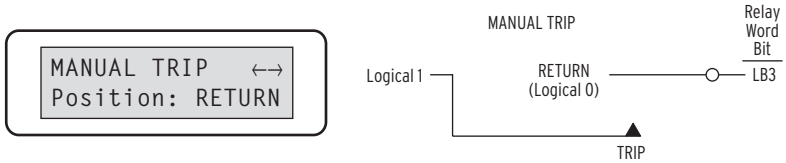

Press the **{SELECT}** pushbutton, and the operate option for the displayed local control switch displays:

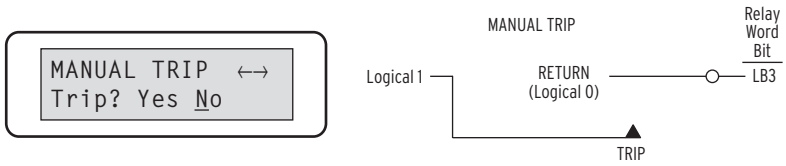

Scroll left with the left arrow button and then select `Yes`. The display then shows the new local control switch position:

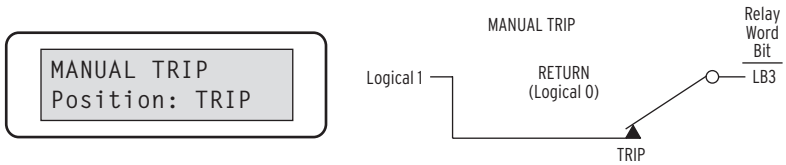

Because this is an OFF/MOMENTARY type switch, the `MANUAL TRIP` switch returns to the `RETURN` position after momentarily being in the `TRIP` position. Technically, the `MANUAL TRIP` switch (being an OFF/MOMENTARY type switch) is in the:

TRIP position for one processing interval (1/8 cycle; long enough to assert the corresponding local bit LB3 to logical 1).

and then returns to the:

RETURN position (local bit LB3 deasserts to logical 0 again).

On the display, the MANUAL TRIP switch is shown to be in the TRIP position for two seconds (long enough to be seen by human eyes), and then it returns to the RETURN position:

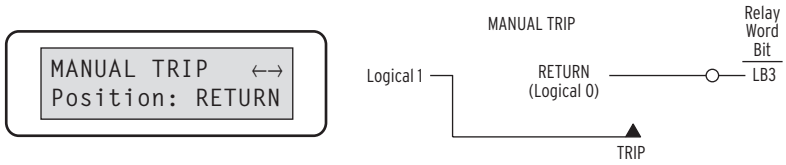

The MANUAL CLOSE switch is an OFF/MOMENTARY type switch, like the MANUAL TRIP switch, and operates similarly.

Local Control State Retained When Relay De-energized

Local bit states are stored in nonvolatile memory, so when power to the relay is turned off, the local bit states are retained.

For example, with the factory default settings, local bit LB1 controls the enabling/disabling of reclosing. If local bit LB1 is at logical 1, reclosing is enabled:

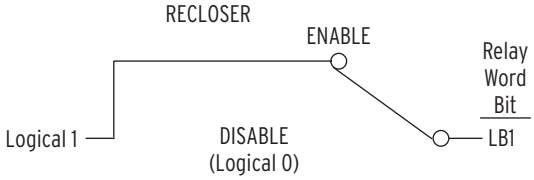

If power to the relay is turned off and then turned on again, local bit LB1 remains at logical 1, and reclosing is still enabled. This is similar to a traditional panel, where enabling/disabling of reclosing and other functions is accomplished by panel-mounted switches. If dc control voltage to the panel is lost and then restored again, the switch positions are still in place. If the reclosing switch is in the enable position (switch closed) before the power outage, it will be in the same position after the outage when power is restored.

Rotating Default Display

The relay name, `SEL-551C`, displays if no local control is operational (i.e., no corresponding switch position label settings were made) and no display point labels are enabled for display.

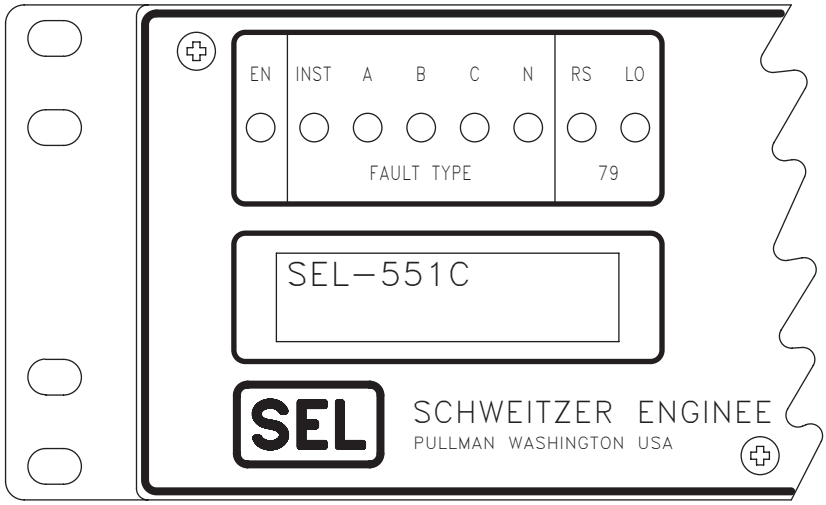

The `Press CNTRL for Local Control` message displays if at least one local control switch is operational. It is a reminder of how to access the local control function. See the preceding discussion in this section and *Local Control Switches on page 3.6* for more information on local control.

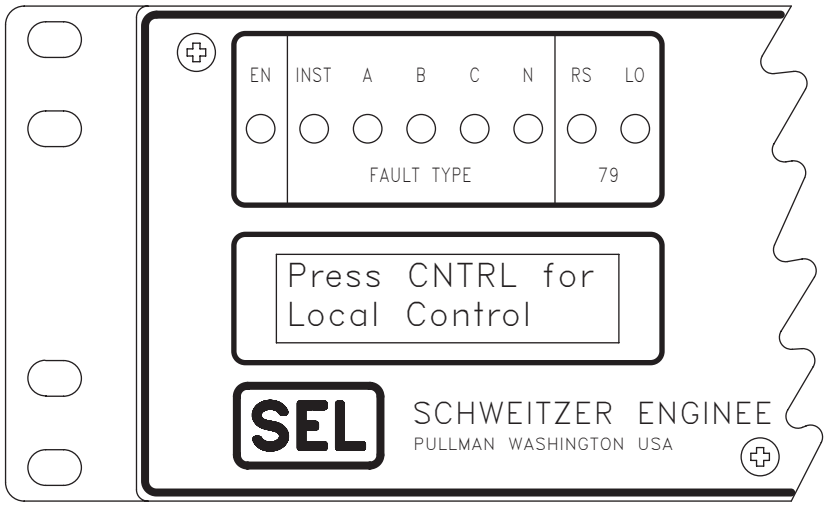

If display point labels are also enabled for display, the `Press CNTRL for Local Control` displays for two seconds and then is followed by enabled display point labels in subsequent two-second rotations.

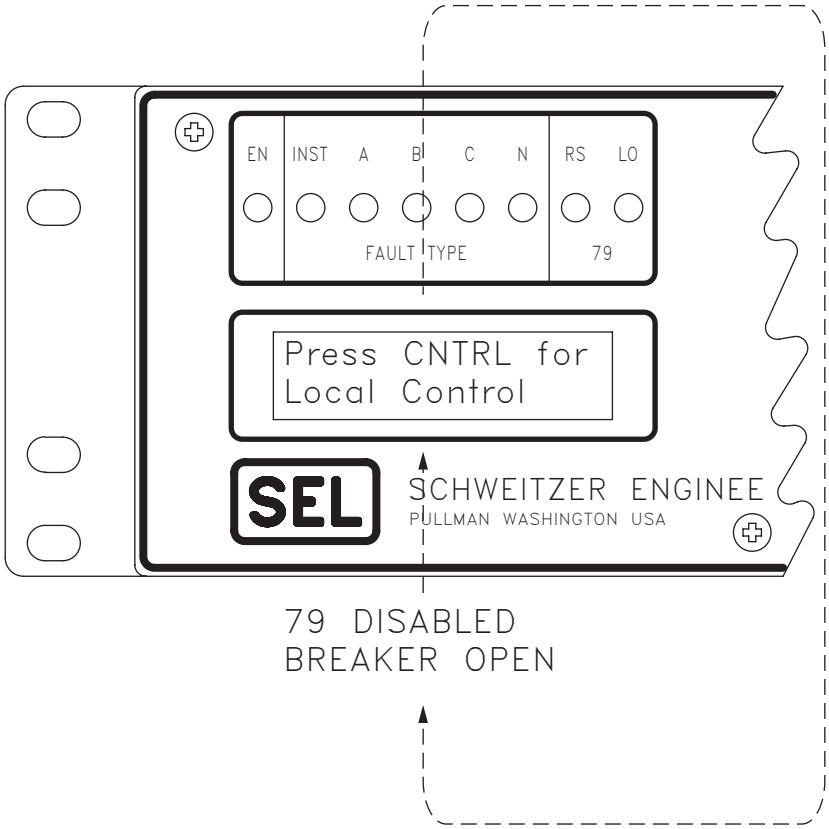

The following table and figures demonstrate the correspondence between changing display point states (e.g., DP2 and DP4) and enabled display point labels (DP2_1/DP2_0 and DP4_1/DP4_0, respectively). The display is on a two-second rotation for each screen.

The display point factory settings are:

DP2 = **LB1** (local bit LB1)

DP4 = **IN1** (optoisolated input **IN1**)

Local bit LB1 is used as a recloser enable/disable local control switch (see *Local Control Switches on page 3.6*).

Optoisolated input **IN1** is used as a circuit breaker status input (a 52a circuit breaker auxiliary contact is connected to input **IN1**; see *Optoisolated Inputs on page 3.4*).

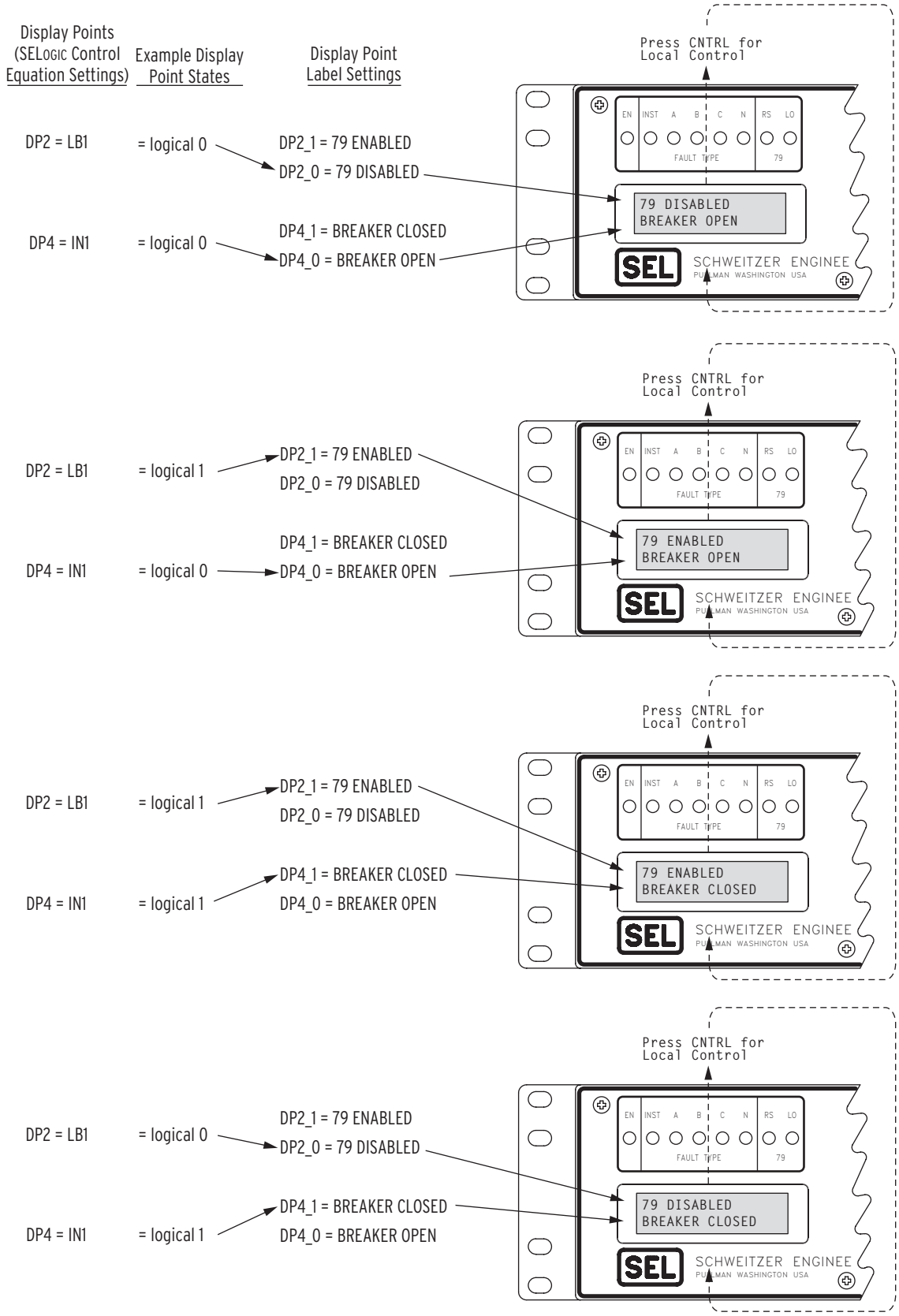

In the preceding example, only two display points (DP2 and DP4) and their corresponding display point labels are set. If additional display points and corresponding display point labels are set, the additional enabled display point

labels join the `two seconds per screen` rotation on the front-panel display.

Display point label settings are set with the **SET T** command or viewed with the **SHOWSET T** command via the serial port [see *Section 4: Setting the Relay* and *SHO Command (Showset) on page 5.19*].

This page intentionally left blank

Section 7

Standard Event Reports and SER

Overview

The SEL-551C Relay has two styles of event reports:

- Standard 15-cycle event reports
- Sequential events recorder (SER) event report

These event reports contain date, time, current, relay element, optoisolated input, and output contact information.

Standard 15-cycle event reports are generated (triggered) by fixed and programmable conditions. These reports show information for 15 continuous cycles. The latest 20 standard 15-cycle event reports are stored in nonvolatile memory. If more than 20 events are triggered, the latest event report will overwrite the oldest event report, and the oldest event report will be lost. See *Figure 7.2* for an example standard 15-cycle event report.

Lines in the sequential events recorder (SER) event report are generated (triggered) by programmable conditions only. This report lists date and time-stamped lines of information each time a programmed condition changes state. The latest 512 lines of the SER event report are stored in nonvolatile memory. If the report fills up, newer rows will overwrite the oldest rows in the report. See *Figure 7.5* for an example SER event report.

Standard 15-Cycle Event Reports

See *Figure 7.2* for an example standard 15-cycle event report.

Standard Event Report Triggering

The relay triggers (generates) a standard 15-cycle event report when any of the following occur:

- Relay Word bit TRIP asserts
- Programmable SELOGIC® control equations setting ER1 asserts to logical 1
- Programmable SELOGIC control equations setting ER2 asserts to logical 1
- **TRIGGER** serial port command executed
- **PULSE** serial port command for output contact **OUT1**, **OUT2**, or **OUT3** executed

Relay Word Bit TRIP

Relay Word bit TRIP would usually be assigned to an output contact for tripping a circuit breaker (e.g., SELOGIC control equations setting OUT1 = TRIP). SELOGIC Control Equations setting TR controls the assertion of Relay Word bit TRIP (see *Figure 3.13*). Any condition that is set to trip in setting TR (e.g., TR = 51P1T + 51G1T + 50P1*SH0 + LB3) does *not* have to be entered in SELOGIC control equation settings ER1 or ER2. The assertion of Relay Word bit TRIP automatically triggers a standard 15-cycle event report.

Programmable SELOGIC Control Equation Settings ER1 and ER2

The programmable SELOGIC control equation settings ER1 and ER2 are set to trigger standard 15-cycle event reports for conditions other than tripping conditions already listed in SELOGIC control equations setting TR. The factory settings are:

ER1 = **51P1 + 51G1**

ER2 = **SV5T + CF**

ER1 is factory-set with time-overcurrent element pickups 51P1 and 51G1. Thus, at the inception of a fault, whichever pickup asserts first will trigger a standard 15-cycle event report.

ER2 is factory-set with a breaker failure condition (SV5T) and close failure condition (CF). It is not likely that these two conditions would assert at the same time. When a breaker failure or close failure condition occurs, a standard 15-cycle event report is triggered.

ER1 and ER2 trigger event reports independently and are rising-edge sensitive (logical 0 to logical 1 transition). For example, if a line-to-ground fault occurs and 51G1 asserts first in setting ER1 (logical 0 to logical 1 transition), it will trigger an event report. If 51G1 remains asserted and then a short time later 51P1 asserts, a second report will not be generated for the assertion of 51P1. ER1 is already at logical 1 because of the initial assertion of 51G1.

Rising-edge or falling-edge detects can be used in making SELOGIC settings. This is particularly useful in these event report trigger settings ER1 and ER2. For example, if setting ER1 = /IN4 + …, then every time input **IN4** asserts (logical 0 to logical 1 transition—see *Figure 3.32* for a time trace example of

IN4 and /IN4), setting ER1 is effectively pulsed for one-processing interval. Thus, if input **IN4** continues to be asserted (maintained at logical 1), it has no further effect on setting ER1 and any other Relay Word bit in setting ER1 is effectively free to operate and be detected by setting ER1. Most likely, each ORed Relay Word bit in setting ER1 or ER2 would have a rising-edge or falling-edge detect in front of it.

See *Section 3: Relay Elements and Logic* for more information on SELOGIC control equations.

TRIGGER and PULSE Serial Port Commands

The sole function of the **TRIGGER** serial port command is to generate standard 15-cycle event reports, primarily for testing purposes.

The **PULSE** serial port command is used to assert the output contacts for testing purposes or for remote control. If output contact **OUT1**, **OUT2**, or **OUT3** is asserted with the **PULSE** command, a standard 15-cycle event report is also generated.

See *Section 5: Serial Port Communications and Commands* for more information on serial port commands.

Standard Event Report Summary

Each time the relay generates a standard 15-cycle event report, it also generates a corresponding event summary (see *Figure 7.1*). Event summaries contain the following information:

- Relay and terminal identifiers (settings RID and TID)
- Date and time when the event was triggered
- Event type
- Recloser shot count at time of trip
- Front-panel fault type targets at the time of trip
- Phase (IA, IB, IC), neutral (IN), calculated residual (3I0), and negative-sequence (3I2) current magnitudes in amps primary measured at the largest phase current magnitude in the triggered event report.

The Event Report Summary shows the magnitude of the maximum phase current calculated by the cosine filter or bipolar peak detector. When the relay uses the bipolar peak detector value (when a phase instantaneous pickup setting is greater than eight times nominal phase current, and the harmonic distortion index is greater than a fixed threshold), the relay displays `pk` as shown in the Event Summary portion of the Example Standard 15-Cycle Event Report near the end of this section (for more information on the cosine filter and bipolar peak detector, see subsection *CT Saturation Protection on page 1.9*).

This event summary information is also contained in the corresponding standard 15-cycle event report. The identifiers, date, and time information is at the top of the standard 15-cycle event report, and the other information follows at the end. See *Figure 7.2*.

```
FEEDER 1                          Date: 08/07/02    Time: 15:33:09.498
STATION A

Event: ER2   Shot: 2 Targets: INST A N
Currents (A Pri), ABCNGQ:    19896 pk  13088   13108    1   1154   714
```

Figure 7.1 Example Event Summary

If serial port setting AUTO = Y, the event summary is sent from the serial port a few seconds after the event.

The latest 20 event summaries are stored in nonvolatile memory and are accessed by the **HISTORY** command. These event summaries correspond to the latest 20 standard 15-cycle event reports also stored in nonvolatile memory.

Event Type

The `Event:` field shows the event type. The possible event types and their descriptions are shown in the table below. Note the correspondence to the preceding event report triggering conditions (see *Standard Event Report Triggering on page 7.2*).

Table 7.1 Event Types

Event	Event Triggered by:
TRIP	Assertion of Relay Word bit TRIP
ER1	SELOGIC control equations setting ER1
ER2	SELOGIC control equations setting ER2
TRIG	Execution of **TRIGGER** serial port command
PULSE	Execution of **PULSE** serial port command

Currents

The `Currents (A pri), ABCNGQ:` field shows the currents present in the event report row containing the maximum phase current. The listed currents are:

- Phase (A = channel IA, B = channel IB, C = channel IC)
- Neutral (N = channel IN)
- Calculated residual (G = $3I_0$; calculated from channels IA, IB, and IC)
- Negative-sequence (Q = $3I_2$; calculated from channels IA, IB, and IC)

Retrieving Full-Length Standard Event Reports

The latest 20 standard 15-cycle (full-length) event reports are stored in nonvolatile memory. Any given event report has four different ways it can be displayed, depending on the particular serial port command issued to the relay. The command choices are shown below. The *n* parameter refers to the event report number (*n* = 1–20), with *n* = 1 being the most recent event report and *n* = 20 being the oldest event report.

Serial Port Command	Format
EVENT *n*	Event report *n* displayed with rows of information each quarter (1/4) cycle.
EVENT C *n*	Digital data are added at the end of the quarter (1/4) cycle resolution event report *n*.
EVENT L *n*	Event report n displayed with rows of information each 1/8 cycle. See *Figure 7.2* for an example of an 1/8-cycle resolution event report.
EVENT L C *n*	Digital data are added at the end of the 1/8-cycle resolution event report *n*.
EVENT R *n*	Event report *n* displayed with 16 cycles of raw (unfiltered) analog information in 1/16-cycle resolution.
EVENT R C *n*	Digital Data are added at the end of the 1/16-cycle resolution raw event report *n* with 1/8-cycle resolution.

If no numeric *n* parameter is entered with the serial port command, the most recent event report ($n = 1$) is displayed.

If an event report is requested which does not exist, the relay responds:

```
Invalid Event
```

The **EVENT** serial port commands can be entered with only the first three letters of the word EVENT. For example, the second most recent 1/8-cycle resolution event report can be retrieved by entering command:

```
=>EVE L 2 <Enter>
```

Clearing Standard Event Report Buffer

The **HIS C** command clears the event summaries and corresponding full-length standard event reports from nonvolatile memory. See the *HIS Command (History) on page 5.16* for more information.

Standard Event Report Column Definitions

Refer to the example event report in *Figure 7.2* to view event report columns. This example event report displays rows of information each 1/8 cycle and was retrieved with the **EVENT L *n*** command.

The columns contain current, element, input, and output information. The current columns show currents in primary amperes. The other columns show a number, letter, or symbol to indicate the condition of the elements, inputs, and outputs.

Current Columns

The current columns show sampled current (after filtering) in primary amperes. The columns are shown in *Table 7.2*.

Table 7.2 Standard Event Report Current Columns (Sheet 1 of 2)

Column Heading	Definition
IA	Current measured by channel IA
IB	Current measured by channel IB
IC	Current measured by channel IC

Table 7.2 Standard Event Report Current Columns (Sheet 2 of 2)

Column Heading	Definition
IN	Current measured by channel IN
IG	Calculated residual current (calculated from channels IA, IB, and IC; IG = IA + IB + IC, vectorially added together)

Note that the current values change from plus to minus (–) values in *Figure 7.2*, indicating the sinusoidal nature of the waveforms.

Other figures help in understanding the information available in the event report current columns:

Figure 7.3 shows how event report current column data relate to the actual sampled current waveform and rms current values.

Figure 7.4 shows how event report current column data can be converted to phasor rms current values.

Table 7.3 Other Standard Event Report Columns (Sheet 1 of 3)

Column Heading	Corresponding Elements (Relay Word Bits)	Symbol	Definition
All columns		.	Element/input/output not picked up or not asserted, unless otherwise stated.
51 P1	51P1, 51P1T, 51P1R	.	Time-overcurrent element reset (51_1R, 51_2R).
51 P2	51P2, 51P2T, 51P2R		
51 N1	51N1, 51N1T, 51N1R	p	Time-overcurrent element picked up and timing (51_1, 51_2).
51 G1	51G1, 51G1T, 51G1R		
51 Q2	51Q1, 51Q1T, 51Q1R	T	Time-overcurrent element timed out (51_1T, 51_2T).
51 Q2	51Q2, 51Q2T, 51Q2R		
		r	Time-overcurrent element timing to reset.
		1	Time-overcurrent element timing to reset after having timed out (when element reset is set for 1 cycle, not electromechanical reset).
50 P12	50P1, 50P2	1	Phase instantaneous overcurrent element 50P1 picked up.
		2	Phase instantaneous overcurrent element 50P2 picked up.
		b	Both 50P1 and 50P2 picked up.
50 P34	50P3, 50P4	3	Phase instantaneous overcurrent element 50P3 picked up.
		4	Phase instantaneous overcurrent element 50P4 picked up.
		b	Both 50P3 and 50P4 picked up.
50 P56	50P5, 50P6	5	Phase instantaneous overcurrent element 50P5 picked up.
		6	Phase instantaneous overcurrent element 50P6 picked up.
		b	Both 50P5 and 50P6 picked up.

Table 7.3 Other Standard Event Report Columns (Sheet 2 of 3)

Column Heading	Corresponding Elements (Relay Word Bits)	Symbol	Definition
50 ABC	50A, 50B, 50C	3	Single-phase instantaneous overcurrent elements 50A, 50B, and 50C picked up.
		a	Only 50A and 50B picked up.
		b	Only 50B and 50C picked up.
		c	Only 50C and 50A picked up.
		A	Only 50A picked up.
		B	Only 50B picked up.
		C	Only 50C picked up.
50 N12	50N1, 50N2	1	Neutral ground instantaneous overcurrent element 50N1 picked up.
		2	Neutral ground instantaneous overcurrent element 50N2 picked up.
		b	Both 50N1 and 50N2 picked up.
50 G12	50G1, 50G2	1	Residual ground instantaneous overcurrent element 50G1 picked up.
		2	Residual ground instantaneous overcurrent element 50G2 picked up.
		b	Both 50G1 and 50G2 picked up.
50 Q12	50Q1, 50Q2	1	Negative-sequence instantaneous overcurrent element 50Q1 picked up.
		2	Negative-sequence instantaneous overcurrent element 50Q2 picked up.
		b	Both 50Q1 and picked up.
79	CF, 79RS,	.	Reclosing relay nonexistent
	79CY, 79LO	F	Close failure condition CF asserts for only 1/8 cycle
		R	Reclosing relay in Reset State (79RS)
		C	Reclosing relay in Reclose Cycle State (79CY)
		L	Reclosing relay in Lockout State (79LO)
Shot	SH0, SH1, SH2	.	Reclosing relay nonexistent
	SH3, SH4	0	shot = 0 (SH0)
		1	shot = 1 (SH1)
		2	shot = 2 (SH2)
		3	shot = 3 (SH3)
		4	shot = 4 (SH4)
Lcl 12	LB1, LB2	1	Local bit LB1 asserted
		2	Local bit LB2 asserted
		b	Both LB1 and LB2 asserted
Lcl 34	LB3, LB4	3	Local bit LB3 asserted
		4	Local bit LB4 asserted
		b	Both LB3 and LB4 asserted
Lcl 56	LB5, LB6	5	Local bit LB5 asserted
		6	Local bit LB6 asserted
		b	Both LB5 and LB6 asserted

Table 7.3 Other Standard Event Report Columns (Sheet 3 of 3)

Column Heading	Corresponding Elements (Relay Word Bits)	Symbol	Definition
Lcl 78	LB7, LB8	7	Local bit LB7 asserted
		8	Local bit LB8 asserted
		b	Both LB7 and LB8 asserted
Rem 12	RB1, RB2	1	Remote bit RB1 asserted
		2	Remote bit RB2 asserted
		b	Both RB1 and RB2 asserted
Rem 34	RB3, RB4	3	Remote bit RB3 asserted
		4	Remote bit RB4 asserted
		b	Both RB3 and RB4 asserted
Rem 56	RB5, RB6	5	Remote bit RB5 asserted
		6	Remote bit RB6 asserted
		b	Both RB5 and RB6 asserted
Rem 78	RB7, RB8	7	Remote bit RB7 asserted
		8	Remote bit RB8 asserted
		b	Both RB7 and RB8 asserted
Rem OC	OC, CC	o	**OPEN** command executed
		c	**CLOSE** command executed
SELogic Var 12	SV1, SV2	1	SELOGIC Variable SV1 asserted
		2	SELOGIC Variable SV2 asserted
		b	Both SV1 and SV2 asserted
SELogic Var 34	SV3, SV4	3	SELOGIC Variable SV3 asserted
		4	SELOGIC Variable SV4 asserted
		b	Both SV3 and SV4 asserted
SELogic Var 5T	SV5, SV5T	p	SELOGIC Variable Timer input SV_ asserted; timer timing on pickup time; timer output SV_T not asserted.
SELogic Var 6T	SV6, SV6T		
SELogic Var 7T	SV7, SV7T		
SELogic Var 8T	SV8, SV8T	T	SELOGIC Variable Timer input SV_ asserted; timer timed out on pickup time; timer output SV_T asserted.
SELogic Var 9T	SV9, SV9T		
SELogic Var 10T	SV10, SV10T		
SELogic Var 11T	SV11, SV11T	d	SELOGIC Variable Timer input SV_ not asserted; timer previously timed out on pickup time; timer output SV_T remains asserted while timer timing on dropout time.
SELogic Var 12T	SV12, SV12T		
SELogic Var 13T	SV13, SV13T		
SELogic Var 14T	SV14, SV14T		

Table 7.4 SEL-551C Input/Output Event Report Columns

Column Heading	Corresponding Elements (Relay Word Bits)	Symbol	Definition
In 12	IN1, IN2	1	Optoisolated input IN1 asserted
		2	Optoisolated input IN2 asserted
		b	Both IN1 and IN2 asserted
In 34	IN3, IN4	3	Optoisolated input IN3 asserted
		4	Optoisolated input IN4 asserted
		b	Both IN3 and IN4 asserted
In 56	IN5, IN6	5	Optoisolated input IN5 asserted
		6	Optoisolated input IN6 asserted
		b	Both IN5 and IN6 asserted
Out 12	OUT1, OUT2	1	Output contact OUT1 asserted
		2	Output contact OUT2 asserted
		b	Both OUT1 and OUT2 asserted
Out 3[a]	OUT3	3	Output contact OUT3 asserted

[a] Output contacts can be a- or b-type output contacts (see Figure 2.14 and Figure 3.23).

Sequential Events Recorder (SER) Event Report

See *Figure 7.5* for an example SER event report.

SER Event Report Row Triggering

The relay triggers (generates) a row in the SER event report for any change of state in any one of the elements listed in the SER1, SER2, and SER3 trigger settings. The factory default settings are:

SER1 = **51P1 51G1 51P1T 51G1T 50P1 50P2**

SER2 = **IN1 LB1 LB3 LB4 OUT1 OUT2 OUT3**

SER3 = **CF 79RS 79LO SV5T**

The elements are Relay Word bits from *Table 4.5*. Each element is looked at individually to see if it asserts or deasserts. Any assertion or deassertion of a listed element triggers a row in the SER event report. For example, setting SER1 contains:

- time-overcurrent element pickups (51P1 and 51G1)
- time-overcurrent element (timed out; 51P1T and 51G1T)
- instantaneous overcurrent elements (50P1 and 50P2)

Thus, any time one of these overcurrent elements picks up, times out, or drops out, a row is triggered in the SER event report.

The other two SER factory settings (SER2 and SER3) trigger rows in the SER event report for such things as optoisolated input (`IN1`), output contact (`OUT1`, `OUT2`, or `OUT3`), lockout state (`79LO`), and breaker failure (`SV5T`) operation, among other things.

Also, if the relay is newly powered up or a settings change is made, a row is triggered in the SER event report with the message:

```
Relay newly powered up or settings changed
```

Each row in the SER event report contains date, time, current, relay element, optoisolated input, and output contact information.

Making SER Event Report Trigger Settings

Each SER trigger setting (SER1, SER2, or SER3) can be set with up to 24 elements (Relay Word bits from *Table 4.5* or *Table 4.6*). Thus, up to 72 elements can be monitored altogether for SER event report row triggering.

The SER settings can be made using spaces or commas as delimiters between elements. For example, if setting SER1 is made as follows:

SER1 = **51P1,51G1 51P1T,,51G1T , 50P1, , 50P2**

The setting displays as:

```
SER1 = 51P1  51G1  51P1T  51G1T  50P1  50P2
```

Retrieving SER Event Report Rows

The latest 455 rows of the SER event report are stored in nonvolatile memory. Row 1 is the most recently triggered row, and row 455 is the oldest. These lines are accessed with the **SER** command in the different ways described in *Table 7.5*.

Table 7.5 SER Report Row Commands and Format

Example SER Serial Port Commands	Format
SER	If **SER** is entered with no numbers following it, all available rows are displayed (up to row number 256). They display with the oldest row at the beginning (top) of the report and the latest row (row 1) at the end (bottom) of the report. Chronological progression through the report is down the page and in descending row number.
SER 17	If **SER** is entered with a single number following it (17 in this example), the first 17 rows are displayed, if they exist. They display with the oldest row (row 17) at the beginning (top) of the report and the latest row (row 1) at the end (bottom) of the report. Chronological progression through the report is down the page and in descending row number.
SER 10 33	If **SER** is entered with two numbers following it (10 and 33 in this example; 10 < 33), all the rows between (and including) rows 10 and 33 are displayed, if they exist. They display with the oldest row (row 33) at the beginning (top) of the report and the latest row (row 10) at the end (bottom) of the report. Chronological progression through the report is down the page and in descending row number.
SER 47 22	If **SER** is entered with two numbers following it (47 and 22 in this example; 47 > 22), all the rows between (and including) rows 47 and 22 are displayed, if they exist. They display with the newest row (row 22) at the beginning (top) of the report and the oldest row (row 47) at the end (bottom) of the report. *Reverse* chronological progression through the report is down the page and in ascending row number.
SER 512 257	Use this format to view any SER row between Row 455 and Row 257 (if these exist). The rows display with the newest row (Row 257) at the beginning (top) of the report and the oldest row (Row 455) at the end (bottom) of the report. Reverse chronological progression through the report is down the page in ascending row number.
SER 3/30/96	If **SER** is entered with one date following it (date 3/30/96 in this example), all the rows on that date are displayed, if they exist. They display with the oldest row at the beginning (top) of the report and the latest row at the end (bottom) of the report, for the given date. Chronological progression through the report is down the page and in descending row number.
SER 2/17/96 3/23/96	If **SER** is entered with two dates following it (date 2/17/96 chronologically *precedes* date 3/23/96 in this example), all the rows between (and including) dates 2/17/96 and 3/23/96 are displayed, if they exist. They display with the oldest row (date 2/17/96) at the beginning (top) of the report and the latest row (date 3/23/96) at the end (bottom) of the report. Chronological progression through the report is down the page and in descending row number.
SER 3/16/96 1/5/96	If **SER** is entered with two dates following it (date 3/16/96 chronologically *follows* date 1/5/96 in this example), all the rows between (and including) dates 1/5/96 and 3/16/96 are displayed, if they exist. They display with the latest row (date 3/16/96) at the beginning (top) of the report and the oldest row (date 1/5/96) at the end (bottom) of the report. *Reverse* chronological progression through the report is down the page and in ascending row number.

The date entries in the above example **SER** commands are dependent on the Date Format setting DATE_F. If setting DATE_F = MDY, then the dates are entered as in the above examples (Month/Day/Year). If setting DATE_F = YMD, then the dates are entered Year/Month/Day.

For any SER event report request, no more than 256 rows can be displayed at a time.

If the requested SER event report rows do not exist, the relay responds:

```
Invalid Record
```

If there are no rows in the SER event report buffer, the relay responds:

```
No SER data
```

Clearing SER Event Report Buffer

If the **SER C** command is entered, the relay prompts the operator for confirmation:

```
Clear SER Buffer
Are you sure (Y/N)?
```

If Y is entered, the relay clears the SER event reports from nonvolatile memory. If N is entered, no reports are cleared, and the relay responds:

```
Canceled
```

SER Event Report Column Definitions

Refer to the example SER event report in *Figure 7.5* to view SER event report columns. Note in *Figure 7.5* that a row in the SER event report is actually two lines long; the first line contains row, date, time, and any written message, and the second line contains the current and the other relay information.

The column definitions in *Table 7.2* and *Table 7.3* also apply to the columns of the SER Event Report. The SER Event Report has a few additional columns:

Column Heading	Definition
Row	SER event report row number (1–455)
Date	Date that the SER event report row was triggered
Time	Time (24-hour time) that the SER event report row was triggered

The SER event report current columns (IA, IB, IC, IN, and IG) display rms primary current magnitude values, rather than sampled current values, as the standard event report current columns do.

Example Standard 15-Cycle Event Report

The following example SEL-551C standard 15-cycle event report in *Figure 7.2* also corresponds to the example sequential events recorder (SER) event report in *Figure 7.5*. The circled, numbered comments in both these figures are explained in the text following *Figure 7.5*.

In *Figure 7.2*, the arrow (>) in the column following the `IG` current column identifies the "trigger" row. This is the row that corresponds to the `Date` and `Time` values at the top of the event report.

The asterisk (*) in the column following the `IG` current column identifies the row with the maximum phase current. The maximum phase current is calculated from the row identified with the asterisk and the row one quarter-cycle previous (see *Figure 7.3*). These currents are listed at the end of the example event report. If the trigger row (>) and the maximum phase current row (*) are the same row, the * symbol takes precedence and is displayed.

```
FEEDER 1                          Date: 02/29/96    Time: 13:45:44.924
STATION A

FID=SEL-551C-R503-Vf-Z001001-D20070301     CID=81DA
                                     51    50       S Lcl Rem   SELogic Var  InOu
                                           PPPANGQ  h                 11111    t
                Amps Pri             PPNGQQ135B111 7o 135713570 135678901234 13A1
     IA      IB      IC      IN      IG 121112246C222 9t 24682468C 24TTTTTTTTTT 24L2

    137    -440     339       0      35 ............ R0 1........ ............ ...1
    420    -386     -13       0      21 ............ R0 1........ ............ ...1
    457    -106    -361      -0     -10 ............ R0 1........ ............ ...1
    225     236    -494      -1     -34 ............ R0 1........ ............ ...1
   -138     440    -339      -0     -37 ............ R0 1........ ............ ...1
   -420     385      12       0     -23 ............ R0 1........ ............ ...1
   -457     106     360       1       8 ............ R0 1........ ............ ...1
   -224    -236     493       0      33 ............ R0 1........ ............ ...1

        [Two cycles of data not shown in this example]

    137    -439     339       0      36 ............ R0 1........ ............ ...1
    420    -385     -13      -0      22 ............ R0 1........ ............ ...1
    456    -106    -361      -0     -11 ............ R0 1........ ............ ...1
    225     236    -494      -0     -34 ............ R0 1........ ............ ...1
   -138     439    -339       0     -38 ............ R0 1........ ............ ...1
   -419     385      12       0     -22 ............ R0 1........ ............ ...1
   -551     106     360       0     -86 ............ R0 1........ ............ ...1
   -675    -236     491       0    -420>p..p......... R0 1........ ............ ...1

    -459    -437     336       0    -560 p..p......... R0 1........ ............ ...1
     320    -382     -14      -0     -76 p..p......... R0 1........ ............ ...1
    1150    -104    -356      -0     690 p..p......... R0 1........ ............ ...1
    1698     232    -485      -1    1445 p..p......... R0 1........ ............ ...1
    1308     432    -331      -0    1409 p..p......... R0 1........ ............ ...1
     -58     377      16       0     335 p..p......... R0 1........ ............ ...1
   -1654     101     353       0   -1201 p..p..1...... C0 1........ ..p......... 1..1
   -2273    -231     483       1   -2022 p..p..1...... C0 1........ ..p......... 1..1

   -1560    -430     330       0   -1661 p..p..1...... C0 1........ ..p......... 1..1
      68    -376     -16      -0    -325 p..p..1...... C0 1........ ..p......... 1..1
    1655    -101    -353      -1    1201 p..p..1...... C0 1........ ..p......... 1..1
    2272     231    -482      -1    2020 p..p..1...... C0 1........ ..p......... 1..1
    1559     429    -330      -0    1658 p..p..1...... C0 1........ ..p......... 1..1
     -67     376      16       0     325 p..p..1...... C0 1........ ..p......... 1..1
   -1654     102     352       1   -1201 p..p..1...... C0 1........ ..p......... 1..1
   -2272    -230     482       1   -2020 p..p..1...... C0 1........ ..p......... 1..1

   -1560    -429     330       0   -1660 p..p..1...... C0 1........ ..p......... 1..1
      66    -376     -16      -0    -326 p..p..1...... C0 1........ ..p......... 1..1
    1654    -102    -352      -0    1200 p..p..1...... C0 1........ ..p......... 1..1
    2274     230    -482      -0    2022 p..p..1...... C0 1........ ..p......... 1..1
    1559     430    -330       0    1658 p..p..1...... C0 1........ ..p......... 1..1
     -69     376      16       0     322 p..p..1...... C0 1........ ..p......... 1..1
   -1656     100     352       0   -1204 p..p..1...... C0 1........ ..p......... 1..1
   -2274    -232     482       0   -2025 p..p..1...... C0 1........ ..p......... 1..1

   -1558    -430     330       0   -1658 p..p..1...... C0 1........ ..p......... 1..1
      70    -375     -16      -0    -321*p..p..1...... C0 1........ ..p......... 1..1
    1656    -100    -352      -0    1204 p..p..1...... C0 1........ ..p......... 1..1
    2273     232    -483      -1    2022 p..p..1...... C0 1........ ..p......... 1..1
    1555     430    -329      -0    1656 p..p..1...... C0 1........ ..p......... 1..1
     -70     374      17       0     321 p..p..1...... C0 1........ ..p......... 1..1
   -1538      88     330       1   -1120 p..p..1...... C0 1........ ..p......... 1..1
   -1725    -222     366       1   -1580 p..p......... C0 1........ ..p......... 1..1
    -922    -337     193       0   -1067 p..p......... C0 1........ ..p......... 1..1
     128    -236     -32      -1    -140 p..p......... C0 1........ ..p......... 1..1
     708     -38    -156      -1     514 p..p......... C0 1........ ..p......... 1..1
     587     107    -127      -1     567 r..p......... C0 1........ ..p......... 1..1
     146     122     -30      -0     238 r..p......... C0 1........ ..p......... 1...
     -94      47      25       1     -22 r..p......... C0 1........ ..p......... 1...
       1       0       2       0       3 r..p......... C0 1........ ..p......... 1...
       1       0       2       0       3 r..r......... C0 1........ ..p......... 1...
       0       0       0       0       0 r..r......... C0 1........ ..p......... 1...
       0       0      -4      -0      -4 r..r......... C0 1........ ..p......... 1...
       0       0      -1       0      -1 r..r......... C0 1........ ..p......... 1...
       0       0      -2      -0      -2 ...r......... C0 1........ ..p......... 1...
       0       0      -1      -0      -1 ...r......... C0 1........ ..p......... 1...
       0       0       1       0       1 ...r......... C0 1........ ..p......... 1...
       0       0       1       0       1 ...r......... C0 1........ ..p......... 1...
       0       0       3       1       3 ............ C0 1........ ..p......... 1...
```

firmware identifier

firmware checksum identifier

one cycle of data

⑥

⑦

See Figure 7.3 and Figure 7.4 for details on this example one cycle of phase A (channel **IA**) current.

⑧

(Continued on next page)

(Continued from previous page)

```
 [Three cycles of data not shown in this example]

 1      0      1      0      2 ............ CO 1........ ..p......... 1...
 0      0     -2     -0     -2 ............ CO 1........ ..p......... 1...
 0      0     -1     -0     -1 ............ CO 1........ ..p......... 1...
-1      0     -4     -0     -5 ............ CO 1........ ..p......... 1...
-1      0     -1     -0     -2 ............ CO 1........ ..p......... 1...
 0      0      2      0      2 ............ CO 1........ ..p......... 1...
 0      0      2      0      2 ............ CO 1........ ........... ....
 1      0      3      0      4 ............ CO 1........ ........... ....

 [One cycle of data not shown in this example]
```

⑨

```
Event: TRIP  Shot: 0 Targets: INST A N
Currents (A Pri), ABCNGQ:    2275    441    482      1   2050   2119

Relay Settings:
RID   =FEEDER 1     TID   =STATION A
CTR   = 120      CTRN  = 120      TDURD = 9.000
50P1P = 15.0     50P2P = 20.0     50P3P = OFF      50P4P = OFF
50P5P = OFF      50P6P = OFF      50ABCP= OFF
51P1P = 6.0      51P1C = U3       51P1TD= 3.00     51P1RS= N
51P2P = OFF      51P2C = U3       51P2TD= 15.00    51P2RS= N
50N1P = OFF      50N2P = OFF
51N1P = OFF      51N1C = U3       51N1TD= 15.00    51N1RS= N
50G1P = OFF      50G2P = OFF
51G1P = 1.5      51G1C = U3       51G1TD= 1.50     51G1RS= N
50Q1P = OFF      50Q2P = OFF
51Q1P = OFF      51Q1C = U3       51Q1TD= 15.00    51Q1RS= N
51Q2P = OFF      51Q2C = U3       51Q2TD= 15.00    51Q2RS= N
79OI1 = 30.000   79OI2 = 600.000  79OI3 = 0.000    79OI4 = 0.000
79RSD = 1800.000 79RSLD= 300.000  CFD   = 60.000
SV5PU = 12.000   SV5DO = 2.000    SV6PU = 0.000    SV6DO = 0.000
SV7PU = 0.000    SV7DO = 0.000    SV8PU = 0.000    SV8DO = 0.000
SV9PU = 0.000    SV9DO = 0.000    SV10PU= 0.000    SV10DO= 0.000
SV11PU= 0.000    SV11DO= 0.000    SV12PU= 0.000    SV12DO= 0.000
SV13PU= 0.000    SV13DO= 0.000    SV14PU= 0.000    SV14DO= 0.000
NFREQ = 60       PHROT = ABC      DATE_F= MDY

SELogic Control Equations:
TR    =51P1T + 51G1T + 50P1 * SH0 + LB3
ULTR  =!(51P1 + 51G1)
51P1TC=1
51P2TC=1
51N1TC=1
51G1TC=1
51Q1TC=1
51Q2TC=1
52A   =IN1
CL    =LB4
ULCL  =TRIP
79RI  =TRIP
79RIS =IN1
79DTL =!LB1 + LB3
79DLS =79LO
79SKP =50P2 * SH0
79STL =TRIP
79BRS =(51P1 + 51G1) * (79RS + 79CY)
79SEQ =0
SET1  =0
RST1  =0
SET2  =0
RST2  =0
SET3  =0
RST3  =0
SET4  =0
RST4  =0
SET5  =0
RST5  =0
SET6  =0
RST6  =0
SET7  =0
RST7  =0
SET8  =0
RST8  =0
ER1   =51P1 + 51G1
ER2   =SV5T + CF
SV1   =0
SV2   =0
SV3   =0
SV4   =0
```

Relay and SELOGIC Control Equations follow the standard 15-cycle event report.

(Continued on next page)

(Continued from previous page)

```
SV5   =TRIP
SV6   =0
SV7   =0
SV8   =0
SV9   =0
SV10  =0
SV11  =0
SV12  =0
SV13  =0
SV14  =0
OUT1  =TRIP
OUT2  =CLOSE
OUT3  =!(SALARM + HALARM)
DP1   =0
DP2   =LB1
DP3   =0
DP4   =IN1
DP5   =0
DP6   =0
DP7   =0
DP8   =0

=>>
```

Figure 7.2 Example SEL-551C Standard 15-Cycle Event Report (1/8-Cycle Resolution)

Figure 7.3 and *Figure 7.4* look in detail at 1 cycle of phase A (channel IA) current identified in *Figure 7.2*. *Figure 7.3* shows how the event report current column data relate to the actual sampled current waveform and rms current values. *Figure 7.4* shows how the event report current column data can be converted to phasor rms current values.

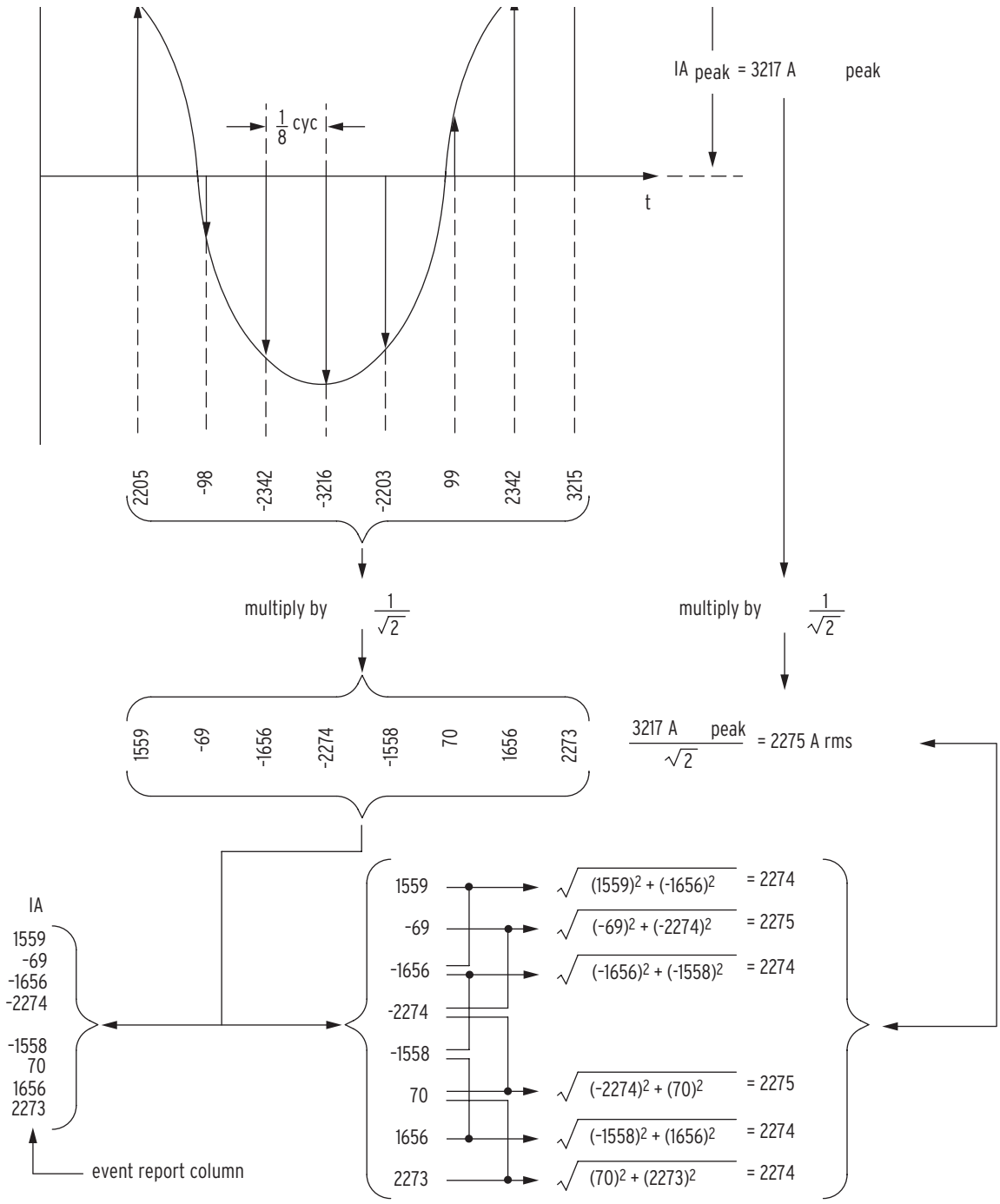

Figure 7.3 Derivation of Event Report Current Values and RMS Current Values From Sampled Current Waveform

In *Figure 7.3*, note that any two rows of current data from the event report in *Figure 7.2*, one quarter (1/4) cycle apart, can be used to calculate rms current values.

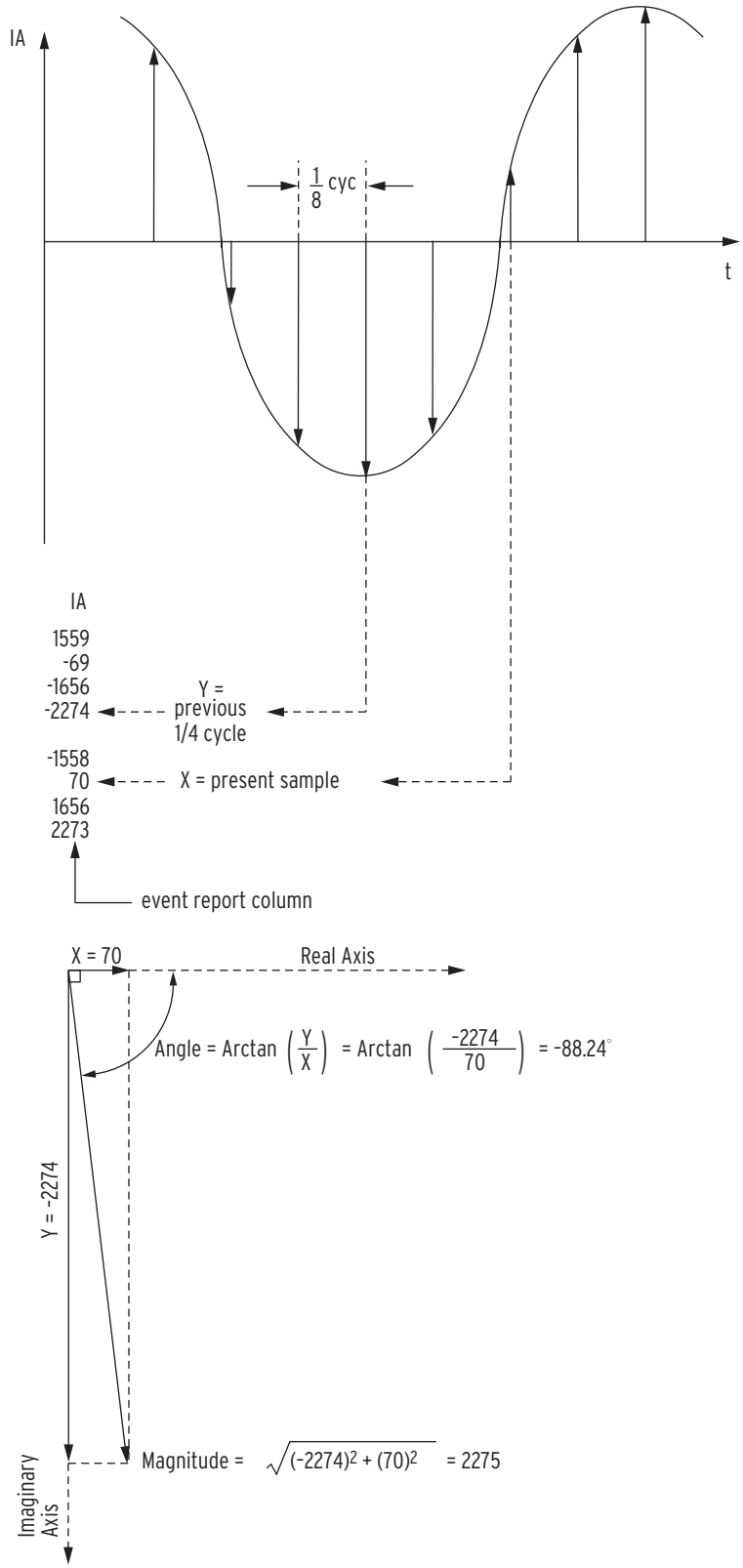

Figure 7.4 Derivation of Phasor RMS Current Values From Event Report Current Values

In *Figure 7.4*, note that two rows of current data from the event report in *Figure 7.2*, one quarter (1/4) cycle apart, can be used to calculate phasor rms current values. In *Figure 7.4*, at the present sample, the phasor rms current value is:

$$IA = 2275\ A\ \angle{-88.24°}$$

The present sample (IA = 70 A) is a real rms current value that relates to the phasor rms current value:

$$2275\ A \bullet \cos(-88.24°) = 70\ A$$

Example Sequential Events Recorder (SER) Event Report

The following example SEL-551C sequential events recorder (SER) event report in *Figure 7.5* also corresponds to the example standard 15-cycle event report in *Figure 7.2*.

```
FEEDER 1                          Date: 06/26/07    Time: 13:46:26.988
STATION A                                                                  See explanation in Figure 7.2.

FID=SEL-551C-R503-Vf-Z001001-D20070301      CID=81DA

                                    51    50       S Lcl Rem   SELogic Var  OutI
Row        Date      Time                 PPPANGQ  h                 11111    n
                 Amps Pri            PPNGQQ135B111 7o 135713570 135678901234 13A1
     IA      IB      IC     IN     IG 121112246C222 9t 24682468C 24TTTTTTTTTT 24L2

13      02/29/96 13:44:30.146       Relay newly powered up or settings changed
      2       0       2      1      4 ............. L2 ......... ............ ....
12      02/29/96 13:45:02.487                                                      ①
      0       0       2      1      2 ............. L2 1........ ............ ....
11      02/29/96 13:45:18.239                                                      ②
      1       0       1      0      2 ............. L2 14....... ............ 2...
10      02/29/96 13:45:18.241                                                      ③
      0       0       2      1      2 ............. L2 1........ ............ 2...
9       02/29/96 13:45:18.256
    236     274     137      0     15 ............. L2 1........ ............ ...1
8       02/29/96 13:45:23.258                                                      ④
    475     454     494      1     31 ............. R2 1........ ............ ...1
7       02/29/96 13:45:44.924                                                      ⑤
    794     451     491      1    421 p..p......... R0 1........ ............ ...1
6       02/29/96 13:45:44.939                                                      ⑥
   2109     443     484      0   1850 p..p..1...... C0 1........ ..p......... 1..1
5       02/29/96 13:45:44.991                                                      ⑦
   1726     435     367      1   1613 p..p......... C0 1........ ..p......... 1..1
4       02/29/96 13:45:44.999
    601     259     131      1    584 r..p......... C0 1........ ..p......... 1..1
3       02/29/96 13:45:45.001
    723     127     158      1    566 r..p......... C0 1........ ..p......... 1...
2       02/29/96 13:45:45.008..                                                    ⑧
     94      47      25      1     22 r..r......... C0 1........ ..p......... 1...
1       02/29/96 13:45:45.089
      1       0       2      0      2 ............. C0 1........ ............ ....
                                                                                   ⑨
```

Figure 7.5 Example Sequential Events Recorder (SER) Event Report

The circled, numbered comments in both *Figure 7.2* and *Figure 7.5* are explained in the following text:

NOTE: Two set open intervals (79OI1, 79OI2) precede the first open interval set to zero (79OI3 = 0.000). Thus, last shot = 2.

① Relay powers up in the Lockout State (L) and at last shot (= 2).

Related setting:

79OI1 = **30.000**

79OI2 = **600.000**

79OI3 = **0.000**

② Front-panel operation of Local bit LB1(1) enables reclosing.

Related setting:

79DTL = **!LB1 +**

③ Front-panel operation of Local bit LB4 (4) closes the circuit breaker via output contact **OUT2** (2).

Related settings:

CL = **LB4**

OUT2 = **CLOSE**

④ Input **IN1**(1) indicates the circuit breaker closed.

Related setting:

52A = **IN1**

⑤ Relay goes to the Reset State (R), 300 cycles after the circuit breaker closes.

Related setting:

79RSLD = **300.000 cycles**

Time difference: 13:45:23.258 – 13:45:18.256 = 5.002 seconds (= 300 cycles)

⑥ Fault starts and time-overcurrent elements 51P1T and 51G1T pick up and start timing (p).

⑦ Relay trips on element 50P1(1). Relay goes to the Reclose Cycle State (C). Element 50P1 can trip because the shot = 0 (0). Output contact **OUT1** (1) trips the circuit breaker.

Related settings:

TR = **... + 50P1 * SH0 +**

OUT1 = **TRIP**

⑧ The circuit breaker opens (.).

⑨ Output contact **OUT1** deasserts (.) after being asserted a minimum of 9 cycles.

Related settings:

TDURD = **9.000 cycles**

OUT1 = **TRIP**

Time difference: 13:45:45.089 – 13:45:44.939 = 0.150 seconds (= 9 cycles)

This page intentionally left blank

Section 8

Testing and Troubleshooting

Overview

The *Acceptance Testing on page 8.5*, *Commissioning Testing on page 8.16*, and *Maintenance Testing on page 8.17* should be used for determining and establishing test routines for the SEL-551C Relay. Included are discussions on testing philosophies, methods, and tools. Example test procedures are shown for the overcurrent elements, differential elements, and metering. Relay troubleshooting procedures are shown at the end of the section.

Protective relay testing can be divided into three categories:

- acceptance
- commissioning
- maintenance

The categories are differentiated by when they take place in the life cycle of the relay, as well as in the test complexity.

The paragraphs below describe when each type of test is performed, the goals of testing at that time, and the relay functions that you need to test at each point. This information is intended as a guideline for testing SEL relays.

Testing Methods and Tools

Test Features Provided by the Relay

The following features assist you during relay testing:

Feature	Description
METER Command	The **METER** command shows the currents presented to the relay in primary values. Compare these quantities against other devices of known accuracy.
EVENT Command	The relay generates an event report in response to faults or disturbances. Each report contains current information, relay element states, and input/output contact information. If you question the relay response or your test method, use the **EVENT** command to display detailed information.
TARGET Command	Use the **TARGET *n*** command to view the state of relay control inputs, relay outputs, and relay elements individually during a test.
SER Command	Use the Sequential Event Recorder for timing tests by setting the SER trigger settings (SER1, SER2, or SER3) to trigger for specific elements asserting or deasserting. View the SER with the **SER** command.
Programmable Outputs	Programmable outputs allow you to isolate individual relay elements. Refer to the **SET** command.

For more information on these features and commands, see *Section 5: Serial Port Communications and Commands*.

Low-Level Test Interface

The SEL-551C has a low-level test interface between the calibrated input module and the separately-calibrated processing module. You can test the relay in either of two ways:

- conventionally, by applying ac current signals to the relay inputs
- by applying low magnitude ac voltage signals to the low-level test interface

⚠CAUTION
The relay contains devices sensitive to Electrostatic Discharge (ESD). When working on the relay with the front panel removed, work surfaces and personnel must be properly grounded or equipment damage may result.

Access the test interface by removing the relay front panel.

Figure 8.1 shows the low-level interface connections. Remove the ribbon cable between the two modules to access the outputs of the input module and the inputs to the processing module (relay main board).

You can test the relay processing module, using signals from the SEL RTS Low-Level Relay Test System. Never apply voltage signals greater than 9 V peak-to-peak to the low-level test interface. *Figure 8.1* shows the signal scaling factors.

You can test the input module two different ways:

1. Measure the outputs from the input module with an accurate voltmeter, and compare the readings to accurate instruments in the relay input circuits, or
2. Replace the ribbon cable, press the front-panel **{METER}** button, and compare the relay readings to other accurate instruments in the relay input circuits.

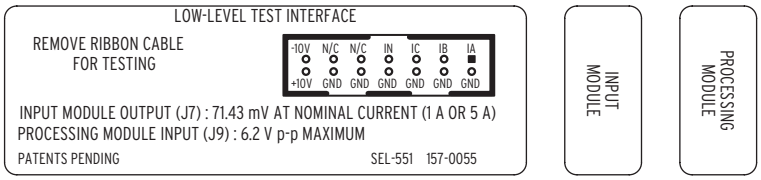

Figure 8.1 Low-Level Test Interface

Test Methods

Test the pickup and dropout of relay elements, using one of three methods:

- front-panel target LCD/LED indication
- output contact operation
- the Sequential Event Recorder (SER)

Target LED Illumination

Step 1. During testing, use target LED illumination to determine relay element status.

Step 2. Using the **TAR** command, set the front-panel targets to display the element under test.

Step 3. Monitor element pickup and dropout by observing the target LEDs.

For example, the level 1 phase instantaneous overcurrent element 50P1 appears in Relay Word Row 2. When you type the command **TAR 2 <Enter>**, the terminal displays the labels and status for each bit in the Relay Word Row (2) and the LEDs display their status. Thus, with these new targets displayed, if the level 1 phase instantaneous overcurrent element (50P1) asserts, the fifth from the left LED illuminates. See *Section 4: Setting the Relay* for a list of all Relay Word elements.

Step 4. Be sure to reset the front-panel targets to the default targets after testing before returning the relay to service.

This can be done by pressing the front-panel **{TARGET RESET}** pushbutton, or by issuing the **TAR R** command from the serial port.

Output Contact Operation

Step 1. To test using this method, set one programmable output contact to assert when the element under test picks up.

Step 2. With the **SET L *n*** command, enter the Relay Word bit name of the element under test.

Step 3. For an a-type output contact, when the condition asserts, the output contact closes. When the condition deasserts, the output contact opens.

Step 4. For a b-type output contact, when the condition asserts, the output contact opens. When the condition deasserts, the output contact closes.

Programmable contacts can be changed to a or b-type output contacts with a solder jumper.

Step 1. Refer to *Section 2: Installation* for jumper locations.

Step 2. Using output contact operation as an indicator, you can measure element operating characteristics, stop timers, etc.

Tests in this section assume an a-type output contact.

Sequential Event Recorder (SER)

Step 1. To test using this method, set the SER to trigger for the element under test.

Step 2. With the **SET R** command, put the element name in the SER1, SER2, or SER3 setting.

Whenever an element asserts or deasserts, a time stamp is recorded.

Step 3. View the SER report with the **SER** command.

Step 4. Clear the SER report with the **SER C** command.

Acceptance Testing

When: Qualifying a relay model to be used on the utility system.

Goal:

- Ensure relay meets published critical performance specifications such as operating speed and element accuracy.
- Ensure that the relay meets the requirements of the intended application.
- Gain familiarity with relay settings and capabilities.

What to test: All protection elements and logic functions critical to the intended application.

SEL performs detailed acceptance testing on all new relay models and versions. We are certain the relays we ship meet their published specifications. It is important for you to perform acceptance testing on a relay if you are unfamiliar with its operating theory, protection scheme logic, or settings. This helps ensure the accuracy and correctness of the relay settings when you issue them.

Equipment Required

The following equipment is necessary to perform all of the acceptance tests:

1. A terminal or computer with terminal emulation with EIA-232 serial interface
2. Interconnecting data cable between terminal and relay
3. Source of relay control power
4. Source of one current at nominal frequency
5. Ohmmeter or contact opening/closing sensing device

Initial Checkout

Step 1. Purpose:

Be sure you received the relay in satisfactory condition.

Method:

Inspect the instrument for physical damage such as dents or rattles.

Step 2. Purpose:

Verify requirements for relay logic inputs, control power voltage level, and voltage and current inputs.

Method:

a. Refer to the information sticker on the rear panel of the relay. Actual information stickers vary, but *Figure 8.2* provides an example.
b. Check the information on this sticker before applying power to the relay or starting tests.
c. Be sure your dc supply is correctly adjusted for the control and logic input requirements. The logic input voltage rating is jumper selectable. The sticker gives the factory default voltage rating.

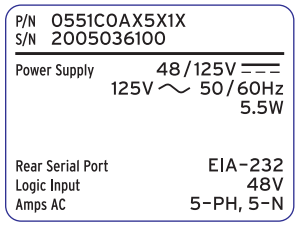

Figure 8.2 Relay Part Number and Hardware Identification Sticker

Power Supply

Step 1. Purpose:

Establish control power connections.

Method:

Connect a frame ground to terminal marked **GND** on the rear panel and connect rated control power to terminals marked **+** and **–**. Relays supplied with 125 or 250 V power supplies can be powered from a 115 Vac wall receptacle for testing. Other power supplies require dc voltage and are polarity sensitive.

Serial Communication

Step 1. Purpose:

Verify the communications interface setup.

Method:

Connect a computer terminal to the serial port of the relay.

Communication Parameters: 2400 Baud, 8 Data Bits, 1 Stop Bit, N Parity

Cables: SEL C234A for 9-pin male computer connections, SEL C227A for 25-pin male computer connections

Step 2. Purpose:

Apply control voltage to the relay, and start Access Level 0 communications.

NOTE: If you are using a battery simulator, be sure the simulator voltage level is stabilized before turning the relay on.

Method:

a. Apply control voltage to the relay. The enable target (**EN**) LED should illuminate. If not, be sure that power is present.

b. Press the **<Enter>** key from your terminal to get the Access Level 0 response from the relay.

The = prompt should appear, indicating that you have established communications at Access Level 0 (presuming correct terminal configuration).

The **OUT3** relay should hold its b-type output contact open. **OUT3** is programmed as an alarm output contact at the factory [OUT3 = !(SALARM + HALARM)].

If these do not occur, refer to *Relay Troubleshooting on page 8.20*.

Step 3. Purpose:

Establish Access Level 1 communications.

Method:

a. Type **ACC <Enter>**.

b. At the prompt, enter the Access Level 1 password and press **<Enter>**. The => prompt should appear, indicating that you have established communications at Access Level 1.

Step 4. Purpose:

Verify relay self-test status.

Method:

a. Type **STA <Enter>**. The following display should appear on the terminal:

```
=>>STA <Enter>

FEEDER 1                          Date: 02/07/00    Time: 23:25:34.869
STATION A

FID=SEL-551C-R504-Vf-D970616      CID=D7F0

SELF TESTS

W=Warn    F=Fail

       IA       IB       IC       IN       MOF
OS      3        3        3        3        0

       +5V_PS   +5V_REG  -5V_REG  +10V_PS  -10V_PS  VBAT
PS      4.99     4.99    -5.06     10.17   -10.33    2.92

       TEMP     RAM      ROM      CR_RAM   EEPROM
        28.6    OK       OK       OK       OK

 Relay Enabled

=>
```

The **STA** Command (Status) subsection in *Section 5: Serial Port Communications and Commands* explains the values listed in the above status printout.

Step 5. Purpose:

View factory settings entered before shipment.

Method:

a. The relay is shipped with factory settings; type **SHO <Enter>** to view the settings. *Section 4: Setting the Relay* includes a complete description of the settings. The terminal display should look similar to the following:

```
=>>SHO <Enter>

Relay Settings:
RID   =FEEDER 1     TID   =STATION A
CTR   = 120      CTRN  = 120      TDURD = 9.000
50P1P = 15.0     50P2P = 20.0     50P3P = OFF      50P4P = OFF
50P5P = OFF      50P6P = OFF      50ABCP= OFF
51P1P = 6.0      51P1C = U3       51P1TD= 3.00     51P1RS= N
51P2P = OFF      51P2C = U3       51P2TD= 15.00    51P2RS= N
50N1P = OFF      50N2P = OFF
51N1P = OFF      51N1C = U3       51N1TD= 15.00    51N1RS= N
50G1P = OFF      50G2P = OFF
51G1P = 1.5      51G1C = U3       51G1TD= 1.50     51G1RS= N
50Q1P = OFF      50Q2P = OFF
51Q1P = OFF      51Q1C = U3       51Q1TD= 15.00    51Q1RS= N
51Q2P = OFF      51Q2C = U3       51Q2TD= 15.00    51Q2RS= N
79OI1 = 30.000   79OI2 = 600.000  79OI3 = 0.000    79OI4 = 0.000
79RSD = 1800.000 79RSLD= 300.000  CFD   = 60.000
DMTC  = 5
PDEMP = 5.00     NDEMP = 1.50     GDEMP = 1.50     QDEMP = 1.50

Press RETURN to continue
SV5PU = 12.000   SV5DO = 2.000    SV6PU = 0.000    SV6DO = 0.000
SV7PU = 0.000    SV7DO = 0.000    SV8PU = 0.000    SV8DO = 0.000
SV9PU = 0.000    SV9DO = 0.000    SV10PU= 0.000    SV10DO= 0.000
SV11PU= 0.000    SV11DO= 0.000    SV12PU= 0.000    SV12DO= 0.000
SV13PU= 0.000    SV13DO= 0.000    SV14PU= 0.000    SV14DO= 0.000
NFREQ = 60       PHROT = ABC      DATE_F= MDY
=>>
```

The *SHO Command (Showset) on page 5.19* explains the other settings available with variations of the **SHO** command.

Outputs

Step 1. Purpose:

Verify that contact outputs operate when you execute the **PULSE** command.

Method:

a. Isolate all circuitry connected to the output contacts.

b. Set the target LEDs to display the contact outputs by typing **TAR 12 <Enter>**. The front-panel LEDs should now follow Row 12 of the Relay Word where the outputs are listed.

c. Execute the **PULSE *n*** command for each output contact.

d. Verify that the corresponding target LED illuminates and that the output contact closes for approximately one second. For example, type **PUL OUT1 <Enter>** to test output contact OUT1.

The response of a programmable alarm output contact to a **PULSE** command is discussed in the *Output Contacts on page 3.43*.

Inputs

Step 1. Purpose:

Verify that logic inputs assert when control voltage is applied across the respective terminal pair.

Method:

a. Set the target LEDs to display the contact inputs by typing **TAR 4 <Enter>**. The fourth and fifth front-panel LED should now follow logic inputs IN1 and IN2, which are in Relay Word Row 4.2.

b. Apply the appropriate control voltage to each input and make sure the corresponding target LED turns on.

Note that the control voltage required to assert an input is jumper selectable.

If you suspect the jumpers to be different from the factory default, refer to *Section 2: Installation* for the jumper locations.

Metering

Step 1. Purpose:

Connect simulated power system secondary current sources to the relay.

Method:

a. Turn power off to the relay and connect current sources.

If three current sources are available, connect them to the relay as shown in *Figure 8.3*. If only two current sources are available, connect the sources as shown in *Figure 8.4* to generate balanced positive-sequence currents.

b. Set the current sources to deliver 1 A secondary.

c. Set the current angles (e.g., B-phase lags A-phase by 120°) according to the phase rotation setting PHROT (i.e., PHROT = ABC or ACB).

Step 2. Purpose:

Verify correct current levels.

Method:

a. Turn relay power on, and use the **METER** command to display the currents applied in *Step 1*.

With applied currents of 1 A secondary per phase and a current transformer ratio of 120:1 (assuming setting CTR = 120), the displayed line currents should be close to 120 amperes primary.

Step 3. Purpose:

Verify phase rotation.

Method:

a. Verify that residual (IG) and negative-sequence (3I2) quantities are approximately zero (or much less than the approximately 120 A primary displayed for the phases).

If IG equals approximately 3 times the applied current, then all three phases have the same angle. If 3I2 equals approximately 3 times the applied current, then the phase rotation is reversed.

b. Turn the current sources off.

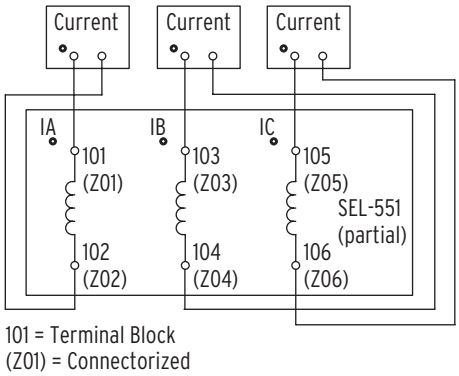

Figure 8.3 Test Connections for Balanced Load With Three-Phase Current Sources

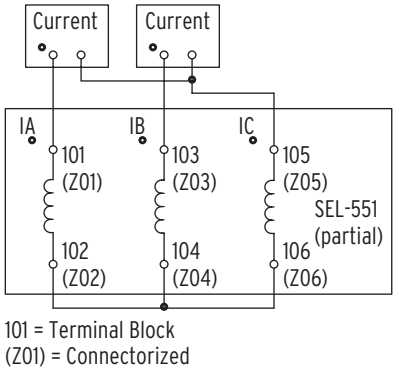

Figure 8.4 Test Connections for Balanced Load With Two-Phase Current Sources

Instantaneous Overcurrent Elements

NOTE: This example tests the 50P1 phase overcurrent element. Use the same procedure to test all instantaneous overcurrent elements for each phase.

Step 1. Purpose:

Determine the expected instantaneous overcurrent element pickup value.

Method:

a. Execute the **SHO** command via the relay front panel or serial port and verify the setting (i.e., **SHO 50P1P <Enter>**).

Step 2. Purpose:

Display the appropriate Relay Word bit on the front-panel LEDs.

Method:

a. Execute the **TARGET** command (i.e., **TAR 2 <Enter>**).

The SEL-551C now displays the state of several overcurrent elements on the front-panel LED and LCD display.

Step 3. Purpose:

Connect and apply a single current test source until the appropriate LED illuminates.

Method:

a. Connect a single current test source (i.e., source 1 to current input IA) as shown in *Figure 8.3*.

b. Turn on the current test source for the phase under test, and slowly increase the magnitude of current applied until the appropriate element asserts (i.e., 50P1), causing the LED to illuminate (i.e., fifth from the left; see *Table 5.5*).

c. Note the magnitude of the current applied. It should equal the 50P1P setting ±5 percent of the setting and ±0.1 A secondary.

Step 4. Purpose:

Repeat test for each instantaneous overcurrent element.

Method:

a. Repeat *Step 1*–*Step 3* for each instantaneous overcurrent element listed in *Table 8.1*.

b. Remember to view the element with the **TAR** command (see *Table 5.6*). The computer terminal will display the LED labels from left to right when the **TAR** command is issued.

Table 8.1 Instantaneous Overcurrent Elements and Corresponding Settings/ Relay Word Bits/TAR Commands

Element	Pickup Setting	Relay Word Bit	TAR
Phase Level 1	50P1P	50P1	2
Phase Level 2	50P2P	50P2	2
Phase Level 3	50P3P	50P3	2
Phase Level 4	50P4P	50P4	2
Phase Level 5	50P5P	50P5	3
Phase Level 6	50P6P	50P6	3
Independent A-Phase Independent B-Phase Independent C-Phase	50ABCP	50A 50B 50C	4
Neutral Ground Level 1	50N1P	50N1	3
Neutral Ground Level 2	50N2P	50N2	3
Residual Ground Level 1	50G1P	50G1	3
Residual Ground Level 2	50G2P	50G2	3
Negative-Sequence Level 1	50Q1P	50Q1	3
Negative-Sequence Level 2	50Q2P	50Q2	3

Inverse-Time Overcurrent Elements

NOTE: This example tests the 51P1T phase inverse-time overcurrent element. Use the same procedure to test all inverse-time overcurrent elements for each phase.

Step 1. Purpose:

Determine the expected time delay for the overcurrent element.

Method:

a. Execute the **SHO** command via the relay front panel or serial port and verify the time delay settings (i.e., **SHO 51P1P <Enter>**).

The delay settings will follow the pickup settings when they are displayed.

b. Calculate the time delay to pickup (tp).

Inverse-time elements are calculated using three element settings and the operating time equations shown in *Section 4: Setting the Relay*. TD is the time-dial setting (i.e., 51P1TD), and M is the applied multiple of pickup current.

For example, if 51P1P = 2.2 A, 51P1C = U3, and 51P1TD = 4.0, we can use the equation below to calculate the expected operating time for M = 3 (applied current equals M • 51P1P = 6.6 A):

$$tp = TD \bullet \left(0.0963 + \frac{3.88}{M^2 - 1}\right)$$

$$tp = 2.33 \text{ seconds}$$

Equation 8.1

Step 2. Purpose:

Set the Sequential Event Recorder to record the element timing.

Method:

a. Use **SET R SER1 <Enter>** to set SER1 equal to the element pickup and time-out Relay Word bits (i.e., 51P1, 51P1T).

b. When prompted, set SER2 and SER3 to NA.

c. Save settings.

Step 3. Purpose:

Connect and apply a single current test source at a level that is M times greater than the pickup (i.e., 2.2 • M = 6.6 A; M = 3 for this example).

Method:

a. Connect a single current test source (i.e., source 1 to current input IA) as shown in *Figure 8.3*.

b. Turn on the single current test source for the phase under test at the desired level.

Step 4. Purpose:

Verify the operation times.

Method:

a. Type **SER <Enter>** to view the sequential event records.

The assertion and deassertion of each element listed in the SER 1, 2, and 3 settings is recorded.

b. Subtract the time from the assertion of the pickup (i.e., 51P1) to the assertion of the time-delayed element (i.e., 51P1T).

SER C clears the Sequential Event Records.

Step 5. Purpose:

Repeat the test for each inverse-time overcurrent element.

Method:

a. Repeat *Step 1*–*Step 4* for each time element listed in *Table 8.2* for each phase.

b. Remember to set the SER for the appropriate elements and apply current to the appropriate phase.

The neutral ground overcurrent elements operate based on current applied to the separate **IN** input.

NOTE: If the electromechanical induction-disk reset emulation is enabled (i.e., 51P1RS = Y), the element under test may take some time to reset fully. If the element is not fully reset when you run a second test, the time to trip will be lower than expected. Usually this setting is set 51P1RS = N.

Table 8.2 Inverse-Time Overcurrent Elements and Corresponding Settings/ Relay Word Bits/TAR Commands (Sheet 1 of 2)

Element/Settings	Setting Names	Relay Word Bits	TAR
Phase Level 1		51P1	1
Pickup	51P1P	(picked up)	
Curve	51P1C		
Time-Dial	51P1TD	51P1T	1
Electromechanical Reset	51P1RS	(timed out)	
Phase Level 2		51P2	1
Pickup	51P2P		
Curve	51P2C		
Time-Dial	51P2TD	51P2T	1
Electromechanical Reset	51P2RS	(timed out)	
Neutral Ground		51N1	1
Pickup	51N1P	(picked up)	
Curve	51N1C		
Time-Dial	51N1TD	51N1T	1
Electromechanical Reset	51N1RS	(timed out)	
Residual Ground		51G1	1
Pickup	51G1P	(picked up)	
Curve	51G1C		
Time-Dial	51G1TD	51G1T	1
Electromechanical Reset	51G1RS	(timed out)	
Negative-Sequence Level 1		51Q1	2
Pickup	51Q1P	(picked up)	
Curve	51Q1C		
Time-Dial	51Q1TD	51Q1T	2
Electromechanical Reset	51Q1RS	(timed out)	

Table 8.2 Inverse-Time Overcurrent Elements and Corresponding Settings/ Relay Word Bits/TAR Commands (Sheet 2 of 2)

Element/Settings	Setting Names	Relay Word Bits	TAR
Negative-Sequence Level 2		51Q2	2
Pickup	51Q2P	(picked up)	
Curve	51Q2C		
Time-Dial	51Q2TD	51Q2T	2
Electromechanical Reset	51Q2RS	(timed out)	

Phase Overcurrent Elements

The SEL-551C has many phase overcurrent elements as shown in *Table 8.1* and *Table 8.2*. Except for elements 50A, 50B, and 50C, they operate based on a comparison between the maximum phase current directly applied to the phase inputs and the phase overcurrent setting.

Test the instantaneous and inverse-time phase overcurrent elements by applying current to the inputs and comparing relay operation to the phase overcurrent settings. These tests were previously outlined in this section.

Negative-Sequence Overcurrent Elements

The SEL-551C has four negative-sequence overcurrent elements as shown in *Table 8.1* and *Table 8.2*. They all operate based on a comparison between a negative-sequence calculation of the three-phase inputs and the negative-sequence overcurrent setting. The negative-sequence calculation that is performed on the three-phase inputs is as follows (assuming ABC rotation):

$$\begin{aligned} 3I2 &= \text{A-phase} + \text{B-phase (shifted by } -120^\circ) \\ &\quad + \text{C-phase (shifted by } 120^\circ) \end{aligned}$$

Equation 8.2

This means that if balanced positive-sequence currents are applied to the relay, the relay reads 3I2 = 0 (load conditions).

For testing purposes, apply a single-phase current to the relay and the negative-sequence overcurrent elements will operate. For example, assume one ampere on A-phase and zero on B- and C-phases:

$$\begin{aligned} 3I2 &= 1 + 0 \text{ (shifted by } -120^\circ) \\ &\quad + 0 \text{ (shifted by } 120^\circ) \\ &= 1 \text{ (simulated ground fault condition)} \end{aligned}$$

Equation 8.3

Test the instantaneous and inverse-time negative-sequence overcurrent elements by applying current to the inputs and comparing relay operation to the negative-sequence overcurrent settings. These tests were previously outlined in this section.

Neutral Ground Overcurrent Elements

The SEL-551C has four neutral ground overcurrent elements. They all operate based on a comparison between the separate neutral current input (IN) and the neutral ground overcurrent setting.

For testing purposes, apply a single-phase current to the separate neutral input and the neutral ground overcurrent elements will operate at the setting threshold.

Test the instantaneous and time-delayed neutral ground overcurrent elements by applying current to the inputs and comparing relay operation to the neutral ground overcurrent settings. These tests were previously outlined in this section.

Residual Ground Overcurrent Elements

The SEL-551C has four residual ground overcurrent elements. They all operate based on a comparison between a residual calculation of the three-phase inputs and the residual ground overcurrent setting. The residual calculation that is performed on the three-phase inputs is as follows:

$$IG = \text{A-phase} + \text{B-phase} + \text{C-phase}$$ **Equation 8.4**

This means that if balanced positive-sequence currents are applied to the relay, the relay reads IG = 0 (load conditions) because the currents cancel one another.

For testing purposes, apply a single-phase current to the relay and the residual overcurrent elements will operate. For example, assume one ampere on A-phase and zero on B- and C-phases:

$$\begin{aligned} IG &= 1 + 0 + 0 \\ &= 1 \text{ (simulated ground fault condition)} \end{aligned}$$ **Equation 8.5**

Test the instantaneous and time-delayed residual overcurrent elements by applying current to the inputs and comparing relay operation to the residual overcurrent settings. These tests were previously outlined in this section.

Commissioning Testing

When: When installing a new protection system.

Goals:

- Ensure that all system ac and dc connections are correct.
- Ensure that the relay functions as intended using your settings.
- Ensure that all auxiliary equipment operates as intended.

What to test:

- all connected or monitored inputs and outputs
- polarity and phase rotation of ac current connections
- simple check of protection elements

SEL performs a complete functional check and calibration of each relay before it is shipped. This helps ensure that you receive a relay that operates correctly and accurately. Commissioning tests should:

1. Verify that the relay is properly connected to the power system and all auxiliary equipment.
2. Verify control signal inputs and outputs.
3. Check breaker auxiliary inputs, SCADA control inputs, and monitoring outputs.
4. Use an ac connection check to verify that the relay current inputs are of the proper magnitude and phase rotation.

Brief fault tests ensure that the relay settings are correct. It is not necessary to test every relay element, timer, and function in these tests.

At commissioning time, use the relay **METER** command to record load currents.

Maintenance Testing

When: At regularly scheduled intervals, or when there is an indication of a problem with the relay or system.

Goals:

- Ensure that the relay is measuring ac quantities accurately.
- Ensure that scheme logic and protection elements are functioning correctly.
- Ensure that auxiliary equipment is functioning correctly.

What to test: Anything not shown to have operated during an actual fault within the past maintenance interval.

SEL relays use extensive self-testing capabilities and feature detailed metering and event reporting functions that lower the utility dependence on routine maintenance testing.

Use the SEL relay reporting functions as maintenance tools.

1. Periodically verify that the relay is making correct and accurate current measurements by comparing the relay METER output to other meter readings on that line.
2. Review relay event reports in detail after each fault.
    a. Using the event report current and relay element data, you can determine that the relay protection elements are operating properly.
    b. Using the event report input and output data, you can determine that the relay is asserting outputs at the correct instants and that auxiliary equipment is operating properly.

At the end of your maintenance interval, the only items that need testing are those that have not operated during the maintenance interval.

The basis of this testing philosophy is simple: If the relay is correctly set and connected, is measuring properly, and no self-test has failed, there is no reason to test it further.

Each time a fault occurs, the protection system is tested. Use event report data to determine areas requiring attention. Slow breaker auxiliary contact operations and increasing or varying breaker operating time can be detected through detailed analysis of relay event reports.

Because SEL relays are microprocessor-based, their operating characteristics do not change over time. Time-overcurrent element operating times are affected only by the relay settings and applied signals. It is not necessary to verify operating characteristics as part of maintenance checks.

At SEL, we recommend that maintenance tests on SEL relays be limited under the guidelines provided above. The time saved may be spent analyzing event data and thoroughly testing those systems that require more attention.

Relay Self-Tests

The relay runs a variety of self-tests. The relay takes the following corrective actions for out-of-tolerance conditions (see *Table 8.3*):

- Protection Disabled: The relay disables overcurrent elements and trip/close logic. All output contacts are de-energized. The **EN** front-panel LED is extinguished.
- In the SEL-551C, the **OUT3** output contact is programmed as an alarm contact at the factory [OUT3 = !(SALARM + HALARM)].

  ALARM Output (**OUT3**): The **ALARM** output contact signals an alarm condition by going to its de-energized state. If the **ALARM** output contact is a b-type output contact (normally closed), it closes for an alarm condition or if the relay is de-energized. If the **ALARM** output contact is an a-type output contact (normally open), it opens for an alarm condition or if the relay is de-energized. Alarm condition signaling can be five-second pulses (Pulsed) or permanent (Latched).
- The relay generates automatic STATUS reports at the serial port for warnings and failures.
- The relay displays failure messages on the relay LCD display for failures.

Use the serial port **STATUS** command or front-panel **{STATUS}** pushbutton to view relay self-test status.

Table 8.3 Relay Self Tests (Sheet 1 of 2)

Self-Test	Condition	Limits	Protection Disabled	HALARM Output	Description
IA,IB,IC,IN Offset	Warning	30 mV	No	Pulsed	Measures the dc offset at each of the current input channels every 0.2 seconds.
Master Offset	Warning	20 mV	No	Pulsed	Measures the dc offset at the A/D every 0.2 seconds.
	Failure	30 mV	Yes	Latched	
+5V PS	Warning	+4.75 V +5.25 V	No	Pulsed	Measures the +5 volt power supply every 0.2 seconds.
	Failure	+4.70 V +5.50 V	Yes	Latched	
±5V REG	Warning	±4.65 V ±5.35 V	No	Pulsed	Measures the regulated 5 volt power supply every 0.2 seconds.
	Failure	±4.50 V ±5.50 V	Yes	Latched	
±10V PS	Warning	±9.00 V ±11.00 V	No	Pulsed	Measures the 10 volt power supply every 0.2 seconds.
	Failure	±8.00 V ±12.00 V	Yes	Latched	
VBAT	Warning	+2.25 V +5.00 V	No	Pulsed	Measures the Real Time clock battery every 0.2 seconds.
	Failure	+2.10 V +6.00 V	No	Pulsed	

Table 8.3 Relay Self Tests (Sheet 2 of 2)

Self-Test	Condition	Limits	Protection Disabled	HALARM Output	Description
TEMP	Warning	−40° C +85° C	No		Measures the temperature at the A/D voltage reference every 0.2 seconds.
	Failure	−50° C +100° C	Yes	Latched	
RAM	Failure		Yes	Latched	Performs a read/write test on system RAM every 60 seconds.
ROM	Failure	checksum	Yes	Latched	Performs a checksum test on the relay program memory every 0.2 seconds.
CR_RAM	Failure	checksum	Yes	Latched	Performs a checksum test on the active copy of the relay settings every 0.2 seconds.
EEPROM	Failure	checksum	Yes	Latched	Performs a checksum test on the nonvolatile copy of the relay settings every 0.2 seconds.
The following self-tests are performed by dedicated circuitry in the microprocessor and the SEL-551C main board. Failures in these tests shut down the microprocessor and are not shown in the STATUS report.					
Microprocessor Crystal	Failure		Yes	Latched	The relay monitors the microprocessor crystal. If the crystal fails, the relay displays `CLOCK STOPPED` on the LCD display. The test runs continuously.
Microprocessor	Failure		Yes	Latched	The microprocessor examines each program instruction, memory access, and interrupt. The relay displays `VECTOR nn` on the LCD upon detection of an invalid instruction, memory access, or spurious interrupt. The test runs continuously.
+5V PS Under/Over Voltage	Failure	+4.65 V +5.95 V	Yes	Latched	A circuit on the SEL-551C main board monitors the +5 V power supply. Upon detection of a failure, the circuit forces the microprocessor to reset.

Relay Troubleshooting

Inspection Procedure

Complete the following procedure before disturbing the relay. After you finish the inspection, proceed to the *Troubleshooting Procedure*.

Step 1. Measure and record the power supply voltage at the power input terminals.

Step 2. Check to see that the power is on. Do not turn the relay off.

Step 3. Measure and record the voltage at all control inputs.

Step 4. Measure and record the state of all output relays.

Troubleshooting Procedure

Table 8.4 Troubleshooting Procedures

Symptom/Possible Cause	Diagnosis/Solution
All Front-Panel LEDs Dark	
	Input power not present or fuse is blown.
	Self-test failure.
Cannot See Characters on Relay LCD Screen	
Relay is de-energized.	Check to see if the programmed `ALARM` output contact (`OUT3`) is closed. In the SEL-551C, the `OUT3` output contact is programmed as an alarm output contact at the factory [OUT3 = !(SALARM + HALARM)].
LCD contrast is out of adjustment.	Use the steps below to adjust the contrast. 1. Remove the relay front panel by removing the three front-panel screws. 2. Press any front-panel button. The relay should turn on the LCD back lighting. 3. Locate the contrast adjust potentiometer directly adjacent to the EN LED. 4. Use a small screwdriver to adjust the potentiometer. 5. Replace the relay front panel.
Relay Does Not Respond to Commands From Device Connected to Serial Port	
Communications device is not connected to the relay.	Connect a communications device.
	Relay or communications device at incorrect baud rate or other communication parameter incompatibility, including cabling error.
Relay serial port has received an XOFF, halting communications.	Type **<Ctrl+Q>** to send relay an XON and restart communications.
Relay Does Not Respond to Faults	
Relay is set improperly.	Review the relay settings. See *Section 4: Setting the Relay*.
Improper test settings.	Restore operating settings.
CT connection wiring error.	Confirm CT wiring.
The analog input cable between the transformer secondary and the main board is loose or defective.	Reseat both ends of the analog input cable, observing proper ESD precautions.
Failed relay self-test.	

Relay Calibration

The SEL-551C is factory-calibrated. If you suspect that the relay is out of calibration, please contact the factory.

Factory Assistance

We appreciate your interest in SEL products and services. If you have any questions or comments, please contact us at:

Schweitzer Engineering Laboratories
2350 NE Hopkins Court
Pullman, WA 99163-5603 USA
Telephone: +1.509.332.1890
Fax: +1.509.332.7990
Internet: www.selinc.com

Appendix A

Firmware and Manual Versions

Firmware

Determining the Firmware Version in Your Relay

To find the firmware revision number in your relay, view the status report using the serial port **STATUS** command or the front-panel **{STATUS}** pushbutton:

FID=SEL **551C-Rxxx-Vf-Z001001-Dxxxxxxxx**

The firmware revision number is after the "R" and the release date is after the "D."

For example:

FID=SEL**-551C-R503-Vf-Z001001-D20070301**

is firmware revision number 503, stored in FLASH, release date March 1, 2007.

Table A.1 list the firmware versions, a description of modifications, and the instruction manual date code that corresponds to firmware versions. The most recent firmware version is listed first.

Table A.1 Firmware Revision History (Sheet 1 of 2)

Firmware Part/Revision No.	Description of Firmware	Manual Date Code
This firmware differs from previous version as follows:		
SEL-551C-R504-Vf-Z001001-D20080104	➤ Reduced Modbus exception code 6 responses.	20080104
This firmware applies to the manual date code listed:		
SEL-551C-R503-Vf-Z001001-D20070301	➤ Manual update only. See *Table A.2* for a summary of manual updates.	20070709
This firmware differs from previous version as follows:		
SEL-551C-R503-Vf-Z001001-D20070301	➤ Fixed potential conflict between simultaneous Fast Operate requests through Port 1 and the front panel. ➤ Repaired Compressed Event report format to restore SEL-5601 compatibility.	20070301
This firmware differs from previous version as follows:		
SEL-551C-R502-Vf-Z001001-D20061005	➤ Modified front-panel phase targeting to target on other 50/51 fault elements. ➤ Fixed the demand ammeter calculation during the transition of daylight savings when connected to a timesource. ➤ Added relay settings to the end of the compressed event reports.	20061005
This firmware applies to the manual date code listed:		
SEL-551C-R501-Vf-Z001001-D20050608	➤ Manual update only. See *Table A.2* for a summary of manual updates.	20050725

Table A.1 Firmware Revision History (Sheet 2 of 2)

Firmware Part/Revision No.	Description of Firmware	Manual Date Code
This firmware differs from previous version as follows:		
SEL-551C-R501-Vf-Z001001-D20050608	➤ Fixed contact output assertion during initialization issue.	20050608
SEL-551C-R500-Vf-Z001001-D20050124	Original Firmware Release. The new SEL-551C Relay includes the same firmware features as the SEL-551 Relay (including the enhancements of the SEL-551 Firmware with datecode D20050124), plus the following features/ differences: ➤ New digital I/O mix results in Relay Word bits IN1–IN6 and OUT1–OUT3 and rearrangement of digital I/O columns in the event report. ➤ Fast messaging and Modbus® also updated. ➤ Latch bits LT1–LT8 with accompanying set and reset SELOGIC settings. ➤ Programmable software and hardware alarm Relay Word bits SALARM and HALARM, respectively. ➤ Optional front-panel EIA-232 serial communications port, resulting in additional serial port settings.	20050124

Instruction Manual

The date code at the bottom of each page of this manual reflects the creation or revision date.

Table A.2 lists the instruction manual release dates and a description of modifications. The most recent instruction manual revisions are listed at the top.

Table A.2 Instruction Manual Revision History (Sheet 1 of 7)

Revision Date	Summary of Revisions
This manual differs from the previous version as follows:	
20080104	Section 1 ➤ Removed Figure 1.1: SEL-551C Front Panel, With Optional Front-Panel EIA-232 Serial Communications Port (redundant with front-panel figures in Section 2: Installation). Section 2 ➤ Added Projection panel mount information. ➤ Corrected Figure 2.11: SEL-551C Provides Overcurrent Protection for a Transformer with a Tertiary Winding, Figure 2.12: SEL-551C Provides Overcurrent Protection for a Distribution Bus (Includes Fast Bus Trip Scheme), and Figure 2.13: SEL-551C Provides Dedicated Breaker Failure Protection to correctly show input contacts. Section 3 ➤ Corrected table number references for Relay Word bits and their descriptions to Table 4.5: SEL-551C Relay Word Bits and Table 4.6: Relay Word Bit Definitions. Section 4 ➤ Corrected table number references for Relay Word bits and their descriptions to Table 4.5: SEL-551C Relay Word Bits and Table 4.6: Relay Word Bit Definitions. ➤ Added Row 0 note for Table 4.5: SEL-551C Relay Word Bits. Section 5 ➤ Corrected table number references for Relay Word bits and their descriptions to Table 4.5: SEL-551C Relay Word Bits and Table 4.6: Relay Word Bit Definitions. Section 6 ➤ Corrected table number references for Relay Word bits and their descriptions to Table 4.5: SEL-551C Relay Word Bits and Table 4.6: Relay Word Bit Definitions. Section 7 ➤ Corrected table number references for Relay Word bits and their descriptions to Table 4.5: SEL-551C Relay Word Bits and Table 4.6: Relay Word Bit Definitions. Appendix A ➤ Updated for firmware version R504.
This manual differs from previous versions as follows:	
20070709	Overall, manual updated for splitting the SEL-551C manual from the SEL-551 manual. This manual now is for the SEL-551C. A separate manual has been created for the SEL-551 relays. Section 1 ➤ Listed major differences for the SEL-551C, compared to the SEL-551 updated. ➤ Removed SEL-551 front-panel drawing and hardware overview. ➤ Removed certain specifications in General Specifications noted for the SEL-551. ➤ Updated 5 A nominal current input specification to include accuracy range. Section 2 ➤ Removed SEL-551 rear-panel drawing and detailed hardware differences. ➤ Added information noting that level sensitive inputs are not jumper selectable.

Table A.2 Instruction Manual Revision History (Sheet 2 of 7)

Revision Date	Summary of Revisions
	Section 3 ➤ Removed SEL-551 relay digital I/O information to the Optoisolated Inputs and Output Contacts subsection. ➤ Remove the explanation on the alarm output contact feature in the SEL-551. ➤ Added information to Lockout State 'A new reclose initiation occurs while the reclosing relay is timing on on an open interval'. **Section 4** ➤ Removed the separate Relay Word bit table for the SEL-551, showing Relay Word bits IN1–IN2 and OUT1–OUT4. ➤ Added example for a CT ration of 600/5, set CTR = 120. ➤ Added 0.1 increment information to Overcurrent Elements. **Section 5** ➤ Removed explanation on the factory settings listed in SHO Command (Showset) that differ for the new SEL-551C, compared to the SEL-551. ➤ Under TAR Command (Target), removed separate Relay Word bit table for the SEL-551, showing Relay Word bits IN1–IN2 and OUT1–OUT4 for the new digital I/O mix. **Section 7** ➤ Removed the rearrangement of digital I/O columns in the event report for the new SEL-551. ➤ Removed the number of rows available in the SER for the SEL-551 relay. **Appendix A** ➤ Updated Instruction Manual Revision History to note the splitting of the SEL-551 and the SEL-551C Instruction Manual. **Appendix D** ➤ Removed DNA message for the SEL-551.
This manual differs from previous versions as follows:	
20070301	**Appendix A** ➤ Updated for firmware revision R512 for the SEL-551. ➤ Updated for firmware revision R503 for the SEL-551C.
This manual differs from previous versions as follows:	
20061005	**Section 3** ➤ Added additional phase pickup settings to the lists of phase pickup settings which cause the **A**, **B**, and **C** target LEDs to illuminate in the Front-Panel Target LEDs subsection. **Appendix A** ➤ Updated for firmware revisions R111 and R511 for the SEL-551. ➤ Updated for firmware revision R502 for the SEL-551C.
This manual differs from the previous versions as follows:	
20050725	**Entire Manual** ➤ Updated format of instruction manual. **Section 2** ➤ Updated rear-panel drawing (Figure 2.8). ➤ Updated Output Contact OUT4 Control Jumper Location drawing (Figure 2.12). ➤ Updated Table 2.2: Required Position of Jumper JMP13 for Desired Output Contact OUT4 Operation. **Section 8** ➤ Updated Figure 8.2: Relay Part Number and Hardware Identification Sticker. **Appendix B** ➤ Added a step about disconnecting the rear serial port connection to the Firmware Upgrade Instructions.
This manual differs from the previous versions as follows:	
20050608	**Appendix A** ➤ Updated for firmware revision R501.

Table A.2 Instruction Manual Revision History (Sheet 3 of 7)

Revision Date	Summary of Revisions
This manual differs from the previous versions as follows:	
20050523	Appendix A ➤ Updated for firmware revision R110/R510.
This manual differs from the previous versions as follows:	
20050120	Overall, manual updated for new relay model SEL-551C. The manual now is a combined, dual manual for both the SEL-551 and the SEL-551C relays. Section 1 ➤ Listed major differences for the new SEL-551C, compared to the SEL-551. ➤ Inserted SEL-551C front-panel drawing and hardware overview. ➤ Certain specifications in General Specifications updated and noted for the new SEL-551C. ➤ Updated 5 A nominal current input specification. ➤ Changed power supply (125/250 Vdc or Vac) burden value to <6.2 W. ➤ Added UL/CSA temperature rating (SEL-551C only). Section 2 ➤ Inserted SEL-551C rear-panel drawing and detailed hardware differences such as the SEL-551C having only conventional terminal blocks. ➤ Reference made to Cable C675, an adapter that brings out EIA-485 pins to a terminal block. ➤ Added EN-61010-1 and the SEL-551C subsection concerning SEL-551C compliance with EN (European Norm) 61010-1 requirements. Section 3 ➤ Added rising-edge and falling-edge detects as SELOGIC operators. ➤ Clarified the respective limits of Relay Word bits that can be used in the SELOGIC settings of each relay. ➤ Added SEL-551C relay digital I/O information to the Optoisolated Inputs and Output Contacts subsection. ➤ Explained the programmable alarm output contact feature in the SEL-551C. ➤ Torque control setting equations for overcurrent elements can no longer be set directly to logical 0. ➤ Added Relay Word bit TRGTR (Target Reset output) application example to the Front-Panel Target LEDs subsection. ➤ Added the Latch Control Switch subsection for latch bits LT1–LT8 (SEL-551C only). ➤ Added a Relay Word bit TRGTR (Target Reset output) application example to the Front-Panel Target LEDs subsection. Section 4 ➤ Created separate Relay Word bit table for the SEL-551C, showing Relay Word bits IN1–IN6 and OUT1–OUT3 for the new digital I/O mix and latch bit outputs LT1–LT8. ➤ Added programmable software and hardware alarm Relay Word bits SALARM and HALARM, respectively, for the SEL-551C. ➤ Added Relay Word bit TRGTR (Target Reset output). ➤ In Setting Sheets, torque control settings equation for overcurrent elements can no longer be set directly to logical 0. ➤ Added additional set and rest SELOGIC settings to the Setting Sheets for latch bits LT1–LT8 (SEL-551C only). ➤ Added note in the Setting Sheets clarifying SER setting range for the SEL-551. ➤ Added additional settings to the Setting Sheets for the optional front-panel EIA-232 serial communications port for the SEL-551C. Section 5 ➤ Added details concerning the optional front-panel EIA-232 serial communications port for the SEL-551C. ➤ Added explanation on the factory settings listed in SHO Command (Showset) that differ for the new SEL-551C, compared to the SEL-551.

Table A.2 Instruction Manual Revision History (Sheet 4 of 7)

Revision Date	Summary of Revisions
	➤ Under TAR Command (Target), created separate Relay Word bit table for the SEL-551C, showing Relay Word bits IN1–IN6 and OUT1–OUT3 for the new digital I/O mix and latch bit outputs LT1–LT8. ➤ Added programmable software and hardware alarm Relay Word bits SALARM and HALARM, respectively, for the SEL-551C. ➤ Added Relay Word bit TRGTR (Target Reset output). ➤ Under PAS Command (Password), added password security enhancement explanation. ➤ Added VER Command. Section 7 ➤ Explained the rearrangement of digital I/O columns in the event report for the new SEL-551C. ➤ Clarified the number of rows available in the SER for each relay. Section 8 ➤ In Relay Self-Tests, explained the programmable alarm output contact feature in the SEL-551C. Appendix A ➤ Updated for firmware revision R509 for the SEL-551 and firmware revision R500 for the new SEL-551C. Appendix D ➤ Added new DNA message for the new SEL-551C. Changed DNA message for SEL-551. ➤ Expanded ID message explanation. Appendix E ➤ Added Compressed ASCII command responses for the SEL-551C. Appendix G ➤ Added new Modbus updates for the new SEL-551C, primarily because of the new digital I/O mix and target LED rearrangement.
This manual differs from the previous versions as follows:	
20030905	Section 1 ➤ Modified text in CT Saturation Protection. Section 3 ➤ Modified text in Phase Instantaneous Overcurrent Elements. Section 7 ➤ Modified text in Standard Event Report Summary. Appendix A ➤ Updated for firmware revisions R109 and R508.
This manual differs from the previous versions as follows:	
20021025	Section 1 ➤ Modified Optoisolated Input Ratings information in General Specifications. Section 2 ➤ Modified text in Control Voltage Jumpers (Conventional Terminal Blocks Option Only).
This manual differs from the previous versions as follows:	
20020828	Section 1 ➤ Updated the Tightening Torque information. ➤ Added information on CT Saturation Protection. Section 2 ➤ Updated the relay figures.

Table A.2 Instruction Manual Revision History (Sheet 5 of 7)

Revision Date	Summary of Revisions
	Section 4 ➤ Added CT sizing information. Section 5 ➤ Updated the Command Summary. Section 7 ➤ Updated Standard Event Report Summary to include CT Saturation Protection information. ➤ Updated the example on the Event Summary Report. ➤ Added Raw Event Report Commands. Appendix A ➤ Updated for firmware revisions R108 and R507.
This manual differs from the previous versions as follows:	
20010518	Title Page ➤ Added Caution, Danger, and Warning information to the back of the cover page of the Manual. ➤ Replaced Standard Product Warranty page with warranty statement on cover page. ➤ Updated password information. Section 1 ➤ Added Tightening Torque information to General Specifications. ➤ Updated Power Supply specification. Section 2 ➤ Updated Figure 2.7: SEL-551 Relay Rear Panel (Plug-In Connectors Option). ➤ Added caution note to the *Clock Battery* subsection. Appendix G ➤ Added clarification to Command Code 10 in Table G.16: Modbus Command Codes.
This manual differs from the previous versions as follows:	
20000211	Reissued all pages with new date code with four-digit year (e.g., 20000211). Section 2 ➤ Added High-Current Interrupting Output Contacts discussion. Section 3 ➤ Updated target logic operation. Section 4 ➤ Updated serial port Setting Sheets. Section 5 ➤ Added Table 5.2: Serial Port Protocols. Incremented all subsequent table numbers and cross references. Appendix A ➤ Updated for firmware versions R506 and R107. Appendix G ➤ Added: Appendix G: Modbus® RTU Communications Protocol

Table A.2 Instruction Manual Revision History (Sheet 6 of 7)

Revision Date	Summary of Revisions
This manual differs from the previous versions as follows:	
991117	**Section 1** ➤ Made minor corrections to General Specifications. **Section 2** ➤ Added Figure 2.3. **Section 3** ➤ Reissued due to cross-reference changes. **Section 4** ➤ Reissued due to cross-reference changes. **Section 7** ➤ Reissued due to cross-reference changes. **Appendix B** ➤ Added new Appendix B: Firmware Upgrade Instructions and relettered appendices following Appendix B.
This manual differs from the previous versions as follows:	
991112	➤ Appendix A ➤ Updated for firmware revisions R505 and R106.
This manual differs from the previous versions as follows:	
981201	**Section 1** ➤ Corrected typographical error on page 1–5 in (no date code change). **Section 2** ➤ Updated Figure 2.6. ➤ Replaced missing Figure 2.8 on page 2-7. **Section 4** ➤ Corrected headings on Settings Sheets. **Section 8** ➤ Due to printer error, the Relay Self-Tests subsection was reinserted. ➤ Updated Figure 8.3 and Figure 8.4. ➤ Deleted Figure 8.5.
This manual differs from the previous versions as follows:	
981027	**Section 2** ➤ Added new Connectorized model 05510W (plug-in connectors) explanation (following Figure 2.6). **Section 8** ➤ Updated Figure 8.1 and Figure 8.2.
This manual differs from the previous versions as follows:	
980831	**Section 2** ➤ Replaced Figure 2.1 and Figure 2.2 on pages 2-1 and 2-2 with updated drawings to provide more accurate dimensions and changed figure captions. ➤ Clarified figure caption and replaced Figure 2.4 on page 2-3 with updated drawing.
This manual differs from the previous versions as follows:	
970717	**Section 1** ➤ Added 24 V breaking capacity and cyclic capacity specifications to Output Contacts (page 1-5).

Table A.2 Instruction Manual Revision History (Sheet 7 of 7)

Revision Date	Summary of Revisions
	➤ Added a note to Level Sensitive input ratings and added 24 V power supply specifications to Power Supply Ratings (page 1–6). ➤ Added power supply voltage input polarity sensitive warning to Power Supply Ratings (page 1–6). ➤ Changed all Demand Meter references to Demand Ammeter. Section 3 ➤ Changed all Demand Meter references to Demand Ammeter. Section 4, Settings Sheets ➤ Changed all Demand Meter references to Demand Ammeter. Section 5 ➤ Changed all Demand Meter references to Demand Ammeter. Section 6 ➤ Changed all Demand Meter references to Demand Ammeter. Appendix A ➤ Changed all Demand Meter references to Demand Ammeter.
This manual differs from the previous versions as follows:	
970616	Reissued entire manual. Significant changes are listed below. Section 1 ➤ Removed subsection Output Contact Operating Times (output contact pickup/dropout information found in General Specifications in the same section). ➤ Updated specifications in AC Input Currents, Output Contacts, Optoisolated Input Ratings, and Routine Dielectric Test. ➤ Added IEC 255-21-2, IEC 255-22-2, IEC 255-22-3, IEC 255-22-4, and IEC 255-11. ➤ Added document dates to type tests and standards. Section 3 ➤ Added Demand Ammetering. ➤ Removed first settings example for settings 79RI and 79RIS [see Reclose Initiate and Reclose Initiate Supervision Settings (79RI and 79RIS, Respectively)]. ➤ Replaced second settings example for setting 79SEQ [see Sequence Coordination (79SEQ)]. Section 4, Settings Sheets ➤ Added settings DMTC, PDEMP, NDEMP, GDEMP, QDEMP to Sheet 3 of 9. ➤ Added Relay Word bits PDEM, NDEM, GDEM, QDEM (see Table 4.3 and Table 5.5). Section 5 ➤ Added serial port and front-panel commands to access demand meter data [see MET D Command (Demand Meter)]. ➤ Modified Recloser Logic. Relay goes to the Lockout State for Open Command execution [see OPE Command (Open)]. Appendix C ➤ Added fast meter messages A5C2, A5D2, A5C3, A5D3 for demand meter data. ➤ Increased the number of digital banks in the A5C1 message. ➤ Added demand meter Relay Word bits to the Compressed ASCII **DNA** command.

Information about changes to earlier versions of the SEL-551 Instruction Manual is not available.

This page intentionally left blank

Appendix B

Firmware Upgrade Instructions

IMPORTANT NOTE REGARDING SETTINGS: The firmware Upgrade Procedure may result in lost relay settings due to the addition of new features and changes in the way memory is used. It is imperative to have a copy of the original relay settings available in case they need to be re-entered. Carefully following these upgrade instructions will minimize the chance of inadvertently losing relay settings.

The SEL-551C Relay has a Flash firmware configuration. Upgrade Flash firmware by downloading the firmware from a personal computer to the relay serial port. SEL ships Flash upgrades on a diskette.

Flash Firmware Upgrades

Required Equipment

- Personal computer.
- Terminal emulation software that supports XMODEM/CRC protocol.
- Serial communications cable (SEL 234A or equivalent).
- Disk containing firmware upgrade file.

Upgrade Procedure

NOTE: If the SEL-551C contains History (**HIS**) data, Event (**EVE**) data, Metering (**MET**) data, or Sequential Events Recorder (**SER**) data that you want to retain, these must be retrieved prior to performing the firmware upgrade, because all of these data sets may be erased in the upgrade procedure.

The instructions below assume you have a working knowledge of your personal computer terminal emulation software. In particular, you must be able to modify your serial communications parameters (baud rate, data bits, parity, etc.), disable any hardware or software flow control in your computer terminal emulation software, select transfer protocol (i.e., XMODEM/CRC), and transfer files (e.g., send and receive binary files).

Step 1. If the relay is in service, disable its control functions.

Step 2. Connect the personal computer to the relay serial port and enter Access Level 2 by issuing the **ACC** and **2AC** commands.

Step 3. Execute the Show Calibration (**SHO C**) command to retrieve the relay calibration settings.

Step 4. Record the displayed settings (or save them to a computer file) for possible reentry after the firmware upgrade.

Step 5. If you do not already have copies of the Global, Group, Logic, Port, SER, and Text label settings, use the following Show commands to retrieve the necessary settings: **SHO**, **SHO L**, **SHO P**, **SHO R**, and **SHO T**.

Normally, the relay will preserve the settings during the firmware upgrade. However, depending on the firmware version that was previously installed and the use of relay memory, this cannot be ensured. Saving settings is always recommended.

Step 6. Set up your communication connection to the highest possible baud rate. The relay will support speeds up to 38,400 baud.

NOTE: SELBOOT does not echo nonalphabetic characters as the first character of a line. This may make it appear that the relay is not functioning properly when just the **<Enter>** key is pressed on the connected PC, even though everything is OK.

Step 7. Use the **SET P** command to change the SPEED setting to the desired baud rate.

Step 8. From Access Level 2, issue the **L_D <Enter>** command to the relay (L underscore D <Enter>) to start the SELBOOT program.

Step 9. Type **Y <Enter>** at the `Disable relay to send or receive firmware (Y/N)?` prompt and **Y <Enter>** to the `Are you sure (Y/N)?` prompt. The relay will send the SELBOOT prompt `!>`.

Step 10. Make a copy of the firmware currently in the relay. This is recommended in case the new firmware download is unsuccessful. To make a backup of the firmware, you will need approximately 500 KB of free disk space. The procedure takes approximately three minutes at 38,400 baud.

Step 11. Issue the Send (**SEN <Enter>**) command to the relay to initiate the firmware transfer from the relay to your computer. No activity will be seen on the PC screen, because the relay is waiting for the PC to request the first XMODEM data packet.

Step 12. Select the "Receive File" function with the XMODEM protocol in your terminal emulation software.

Step 13. Give the file a unique name to clearly identify the firmware version (e.g., 551_R500.S19). After the transfer, the relay will respond:

NOTE: If the relay power fails during a firmware receive after the old firmware is erased, the relay will restart in SELBOOT, but the baud rate will default to 2400 baud. (If this happens, connect to the relay at 2400 baud and type BAUD 38400 at the SELBOOT prompt. The firmware receive can be started again at Step 14.)

```
Download completed successfully!
```

Step 14. Begin the transfer of the new firmware to the relay by issuing the Receive (**REC <Enter>**) command to instruct the relay to receive new firmware.

Step 15. The relay will ask if you are sure you want to erase the existing firmware.

Step 16. Type **Y** to erase the existing firmware and load new firmware, or just **<Enter>** to abort.

Step 17. The relay then prompts you to press a key and begin the transfer.

Step 18. Press a key (e.g., **<Enter>**).

Step 19. Start the file transfer by selecting the "Send File" function in your terminal emulation software. Use the XMODEM or 1k-XMODEM (fastest) protocol and send the file that contains the new firmware (e.g., Relay.S19).

After the transfer completes, the relay will reboot and return to Access Level 0. The following screen capture shows the entire process.

NOTE: The relay will display one or more "C" characters as it waits for your PC Terminal Emulation program to send the new firmware. If you do not start the transfer quickly enough (within about 18 seconds), it may time out and respond "Remote system is not responding." If this happens, begin again in Step 14, above.

NOTE: The file transfer takes approximately three minutes at 38,400 baud, using the 1k-XMODEM protocol.

```
=>>L_D <Enter>
Disable relay to send or receive firmware(Y/N) ? Y <Enter>
Are you sure (Y/N) ? Y <Enter>
Relay Disabled
!>SEN <Enter>
Download completed successfully!

!>REC <Enter>
Caution! - This command erases the relay's firmware.
If you erase the firmware, new firmware must be loaded into the relay
before it can be put back into service.

Are you sure you wish to erase the existing firmware? (Y/N)Y <Enter>
Erasing
Erase successful
Press any key to begin transfer, then start transfer at the PC <Enter>

Upload completed successfully. Attempting a restart
```

Step 20. The relay illuminates the **EN** front-panel LED if the original relay settings were retained through the download.

Step 21. If the **EN** LED is illuminated, proceed to *Step 23*; otherwise, the relay may display various self-test failures because of changes in the way memory is used.

Step 22. If the **EN** LED is extinguished, the relay baud rate has changed back to the factory default of 2400 baud; go to self-test failure: CR_RAM and EEPROM, *Step 22 Step a*.

Self-test failure: CR_RAM and EEPROM

a. Set your communications software settings to 2400 baud, 8 data bits, 1 stop bit.

b. Now enter Access Level 2 by issuing the **ACC** and **2AC** commands, (the factory default passwords will be in effect).

c. Issue the Restore Settings (**R_S**) command to restore the factory default settings in the relay. This takes about two minutes, then the **EN** LED will illuminate.

d. Enter Access Level 2 by issuing the **ACC** and **2AC** commands, (the factory default passwords will be in effect).

e. Restore the original settings as necessary with each of the following commands: **SET**, **SET L**, **SET P**, **SET R**, and **SET T**.

f. Set the relay passwords via the **PAS** command.

Passwords are case-sensitive, so the lower- and uppercase letters are treated differently.

g. If there are still any `FAIL` codes on the Relay LCD, see *Section 8: Testing and Troubleshooting*.

Step 23. Verify the calibration settings by issuing the **SHO C** command.

Step 24. If the settings do not match the settings recorded in *Step 3 on page B.1*, reissue the settings with the **SET C** command.

Step 25. Execute the Status (**STA**) command to verify that all relay self-test parameters are within tolerance, and that the relay is enabled.

Step 26. Apply current signals to the relay.

Step 27. Issue the **MET** command.

Step 28. Verify that the current and voltage signals are correct.

Step 29. Issue the Trigger (**TRI**) and Event (**EVE**) commands.

Step 30. Verify that the current and voltage signals are correct in the event report.

The relay is now ready for your commissioning procedure.

Appendix C

SEL Distributed Port Switch Protocol

Overview

SEL Distributed Port Switch Protocol (LMD) permits multiple SEL relays to share a common communications channel. It is appropriate for low-cost, low-speed port switching applications where updating a real-time database is not a requirement.

Settings

Use the front-panel **{SET}** pushbutton or the serial port **SET P** command to activate the LMD protocol. Change the port PROTOCOL setting from the default SEL to LMD to reveal the following settings:

Setting	Description
PREFIX:	One character to precede the address. This should be a character that does not occur in the course of other communications with the relay. Valid choices are one of the following: “@” “#” “$” “%” “&.” The default is “@.”
ADDRESS:	Two character ASCII address. The range is “01” to “99.” The default is “01.”
SETTLE TIME:	Time in seconds that transmission is delayed after the request to send (RTS line) asserts. This delay accommodates transmitters with a slow rise time.

Operation

NOTE: You can use the front-panel {SET} pushbutton to change the port settings to return to SEL protocol.

1. The relay ignores all input from this port until it detects the prefix character and the two-byte address.
2. Upon receipt of the prefix and address, the relay enables echo and message transmission.
3. Wait until you receive a prompt before entering commands to avoid losing echoed characters while the external transmitter is warming up.
4. Until the relay connection terminates, you can use the standard commands that are available when PROTOCOL is set to SEL.
5. The **QUIT** command terminates the connection. If no data are sent to the relay before the port timeout period, it automatically terminates the connection.
6. Enter the sequence **CTRL-X QUIT <CR>** before entering the prefix character, if all relays in the multidrop network do not have the same prefix setting.

This page intentionally left blank

Appendix D

Configuration, Fast Meter, and Fast Operate Commands

Overview

SEL relays have two separate data streams that share the same serial port. The human data communications with the relay consist of ASCII character commands and reports that are intelligible to humans using a terminal or terminal emulation package. The binary data streams can interrupt the ASCII data stream to obtain information and then allow the ASCII data stream to continue. This mechanism allows a single communications channel to be used for ASCII communications (e.g., transmission of a long event report) interleaved with short bursts of binary data to support fast acquisition of metering data. The device connected to the other end of the link requires software that uses the separate data streams to exploit this feature. The binary commands and ASCII commands can also be accessed by a device that does not interleave the data streams.

SEL *Application Guide AG95-10, Configuration and Fast Meter Messages*, is a comprehensive description of the SEL binary messages. Below is a description of the messages provided in the SEL-551C.

Message Lists

Table D.1 Binary Message List

Request to Relay (hex)	Response From Relay
A5C0	Relay Definition Block
A5C1	Fast Meter Configuration Block
A5D1	Fast Meter Data Block
A5C2	Demand Fast Meter Configuration Block
A5D2	Demand Fast Meter Data Message
A5C3	Peak Demand Fast Meter Configuration Block
A5D3	Peak Demand Fast Meter Data Message
A5B9	Fast Meter Status Acknowledge
A5CE	Fast Operate Configuration Block
A5E0	Fast Operate Remote Bit Control
A5E3	Fast Operate Breaker Control

Table D.2 ASCII Configuration Message List

Request to Relay (ASCII)	Response From Relay
ID	ASCII Firmware ID String and Terminal ID Setting (TID)
DNA	ASCII Names of Relay Word bits
BNA	ASCII Names of bits in the A5B9 Status Byte

Message Definitions

A5C0 Relay Definition Block

In response to the A5C0 request, the relay sends the following block:

Table D.3 A5C0 Relay Definition Block

Data	Description
A5C0	Command
30	Length
02	Support two protocols, SEL and LMD
03	Support three Fast Meter messages
03	Three status flag commands
A5C1	Fast Meter configuration command
A5D1	Fast Meter command
A5C2	Demand Fast Meter configuration command
A5D2	Demand Fast Meter command
A5C3	Peak Demand Fast Meter configuration command
A5D3	Peak Demand Fast Meter command
0004	Settings change bit
A5C100000000	Fast Meter configuration message
0004	Settings change bit
A5C200000000	Demand Fast Meter configuration message
0004	Settings change bit
A5C300000000	Peak Demand Fast Meter configuration message
0100	SEL protocol, Fast Operate
0101	LMD protocol, Fast Operate
00	Reserved
checksum	1-byte checksum of preceding bytes

A5C1 Fast Meter Configuration Block

In response to the A5C1 request, the relay sends the following block:

Table D.4 A5C1 Fast Meter Configuration Block (Sheet 1 of 2)

Data	Description
A5C1	Fast Meter command
48	Length
01	One status flag byte
00	Scale factors in Fast Meter message
02	Two scale factors
04	Four analog input channels
04	Four samples per channel
11	Seventeen digital banks
01	One calculation block
000C	Analog channel offset
002C	Time stamp offset
0034	Digital offset

Table D.4 A5C1 Fast Meter Configuration Block (Sheet 2 of 2)

Data	Description
494100000000	Analog channel name (IA)
00	Analog channel type (integer)
01	Scale factor type (float)
0004	Scale factor offset in A5D1 message
494200000000	Analog channel name (IB)
00	Analog channel type (integer)
01	Scale factor type (float)
0004	Scale factor offset in A5D1 message
494300000000	Analog channel name (IC)
00	Analog channel type (integer)
01	Scale factor type (float)
0004	Scale factor offset in A5D1 message
494E00000000	Analog channel name (IN)
00	Analog channel type (integer)
01	Scale factor type (float)
0008	Scale factor offset in A5D1 message
1-byte	Line configuration: 00 - ABC, 01 - ACB; based on PHROT relay setting
03	Calculation type (currents only)
FFFF	Skew correction offset (none)
FFFF	Rs scale factor offset (none)
FFFF	Xs scale factor offset (none)
00	IA channel index
01	IB channel index
02	IC channel index
FF	VA channel index (none)
FF	VB channel index (none)
FF	VC channel index (none)
00	Reserved
checksum	1-byte checksum of all preceding bytes

A5D1 Fast Meter Data Block

In response to the A5D1 request, the relay sends the following block:

Table D.5 A5D1 Fast Meter Data Block (Sheet 1 of 2)

Data	Description
A5D1	Command
44	Message length
1-byte	Status Byte
4-bytes	Phase current scale factor (4-byte IEEE FPS)
4-bytes	Neutral current scale factor (4-byte IEEE FPS)

Table D.5 A5D1 Fast Meter Data Block (Sheet 2 of 2)

Data	Description
32 bytes	The first and third half-cycles of two cycles of data saved by the relay. The data are presented in quarter-cycle sets of integer data in the following order: IA, IB, IC, IN
8-bytes	Time stamp
17-bytes	Relay Word bits (see DNA message for bit map)
checksum	1-byte checksum of all preceding bytes

A5C2/A5C3 Demand/ Peak Demand Fast Meter Configuration Messages

In response to the A5C2 or A5C3 request, the relay sends the following fast meter configuration block:

Table D.6 A5C2/A5C3 Demand/Peak Demand Fast Meter Configuration Messages (Sheet 1 of 2)

Data	Description
A5C2 or A5C3	Demand (A5C2) or Peak Demand (A5C3) command
4E	Length
01	# of status flag bytes
00	Scale factors in meter message
00	# of scale factors
06	# of analog input channels
01	# of samples per channel
00	# of digital banks
00	# of calculation blocks
0004	Analog channel offset
0034	Time stamp offset
FFFF	Digital offset
494100000000	Analog channel name (IA)
02	Analog channel type
FF	Scale factor type
0000	Scale factor offset in Fast Meter message
494200000000	Analog channel name (IB)
02	Analog channel type
FF	Scale factor type
0000	Scale factor offset in Fast Meter message
494300000000	Analog channel name (IC)
02	Analog channel type
FF	Scale factor type
0000	Scale factor offset in Fast Meter message
494E00000000	Analog channel name (IN)
02	Analog channel type
FF	Scale factor type
0000	Second scale factor offset in Fast Meter message
494700000000	Analog channel name (IG)

Table D.6 A5C2/A5C3 Demand/Peak Demand Fast Meter Configuration Messages (Sheet 2 of 2)

Data	Description
02	Analog channel type
FF	Scale factor type
0000	Scale factor offset in Fast Meter message
334932000000	Analog channel name (3I2)
02	Analog channel type
FF	Scale factor type
0000	Scale factor offset in Fast Meter message
00	Reserved
checksum	

A5D2/A5D3 Demand/ Peak Demand Fast Meter Message

In response to the A5D2 or A5D3 request, the relay sends the following block:

Table D.7 A5D2/A5D3 Demand/Peak Demand Fast Meter Message

Data	Description
A5D2 or A5D3	Command
3E	Length
1-byte	1 Status Byte
48-bytes	Demand IA, IB, IC, IN, IG, 3I2 in 8-byte IEEE FPS
8-bytes	Time stamp
1-byte	reserved
1-byte	1-byte checksum of all preceding

A5B9 Fast Meter Status Acknowledge Message

In response to the A5B9 request, the relay clears the Fast Meter (message A5D1) Status Byte. The SEL-551C Status Byte contains one active bit, STSET (bit 4). The bit is set on power up and on settings changes. If the STSET bit is set, the external device should request the A5C1, A5C2, and A5C3 messages. The external device can then determine if the scale factors or line configuration parameters have been modified.

A5CE Fast Operate Configuration Block

In response to the A5CE request, the relay sends the following block:

Table D.8 A5CE Fast Operate Configuration Block (Sheet 1 of 2)

Data	Description
A5CE	Command
24	Message length
01	Support one circuit breaker
0008	Support 8 remote bit set/clear commands
01	Allow remote bit pulse commands
00	Reserved
31	Operate code, open breaker 1
11	Operate code, close breaker 1
00	Operate code, clear remote bit RB1

Table D.8 A5CE Fast Operate Configuration Block (Sheet 2 of 2)

Data	Description
20	Operate code, set remote bit RB1
40	Operate code, pulse remote bit RB1
01	Operate code, clear remote bit RB2
21	Operate code, set remote bit RB2
41	Operate code, pulse remote bit RB2
02	Operate code, clear remote bit RB3
22	Operate code, set remote bit RB3
42	Operate code, pulse remote bit RB3
03	Operate code, clear remote bit RB4
23	Operate code, set remote bit RB4
43	Operate code, pulse remote bit RB4
04	Operate code, clear remote bit RB5
24	Operate code, set remote bit RB5
44	Operate code, pulse remote bit RB5
05	Operate code, clear remote bit RB6
25	Operate code, set remote bit RB6
45	Operate code, pulse remote bit RB6
06	Operate code, clear remote bit RB7
26	Operate code, set remote bit RB7
46	Operate code, pulse remote bit RB7
07	Operate code, clear remote bit RB8
27	Operate code, set remote bit RB8
47	Operate code, pulse remote bit RB8
00	Reserved
checksum	1-byte checksum of all preceding bytes

A5E0 Fast Operate Remote Bit Control

The external device sends the following message to perform a remote bit operation:

Table D.9 A5E0 Fast Operate Remote Bit Control

Data	Description
A5E0	Command
06	Message length
1-byte	Operate code:
	00-07 clear remote bit RB1–RB8
	20-27 set remote bit RB1–RB8
	40-47 pulse remote bit for RB1–RB8
1-byte	Operate validation: 4 • Operate code + 1
checksum	1-byte checksum of preceding bytes

The relay performs the specified remote bit operation if the following conditions are true:

- The Operate code is valid.
- The Operate validation = 4 • Operate code + 1.
- The message checksum is valid.
- The FAST_OP port setting is set to Y.
- The relay is enabled.

Remote bit set and clear operations are latched by the relay. Remote bit pulse operations assert the remote bit for one processing interval (1/8 cycle).

A5E3 Fast Operate Breaker Control

The external device sends the following message to perform a fast breaker open/close:

Table D.10 A5E3 Fast Operate Breaker Control

Data	Description
A5E3	Command
06	Message length
1-byte	Operate code:
	31-OPEN breaker
	11-CLOSE breaker
1-byte	Operate Validation: 4 • Operate code + 1
checksum	1-byte checksum of preceding bytes

The relay performs the specified breaker operation if the following conditions are true:

- Conditions 1–5 defined in the A5E0 message are true.
- The **BREAKER** jumper is in place on the SEL-551C main board.
- The TDURD setting is non-zero.

ID Message

In response to the **ID** command, the relay sends the following:

```
<STX>"FID STRING ENCLOSED IN QUOTES","yyyy" <CR>
"BFID STRING ENCLOSED IN QUOTES","yyyy" <CR>
"CID STRING ENCLOSED IN QUOTES","yyyy" <CR>
"DEVID STRING ENCLOSED IN QUOTES","yyyy" <CR>
"DEVCODE STRINGENCLOSED IN QUOTES","yyyy" <CR>
"PARTNO STRING ENCLOSED IN QUOTES","yyyy" <CR>
"CONFIG STRING ENCLOSED IN QUOTES","yyyy" <CR>
"SPECIAL STRING ENCLOSED IN QUOTES","yyyy" <CR>
<ETX>
```

where:

<STX> = the STX character (02)
<CR> = the carriage return character (13)
<ETX> = the ETX character (03)
DEVCODE = the string containing the Modbus® device code (63 for SEL-551C)
yyyy = the 4-byte ASCII hex representation of the checksum for each line

The ID message is available from Access Level 1 and higher.

DNA Message

In response to the **DNA** command, the relay sends names of the Relay Word bits transmitted in the A5D1 message. The first name is associated with the MSB, the last name with the LSB. The DNA message for the SEL-551C is:

```
<STX>"EN","INST","RS","LO","A","B","C","N","07A5"
"51P1","51P2","51N1","51G1","51P1T","51P2T","51N1T","51G1T","0BF4"
"51Q1","51Q2","51Q1T","51Q2T","50P1","50P2","50P3","50P4","0B68"
"50P5","50P6","50N1","50N2","50G1","50G2","50Q1","50Q2","0AA8"
"50A","50B","50C","*","*","0C","CC","CF","076A"
"LB1","LB2","LB3","LB4","LB5","LB6","LB7","LB8","0994"
"RB1","RB2","RB3","RB4","RB5","RB6","RB7","RB8","09C4"
"SV1","SV2","SV3","SV4","SV5","SV6","SV7","SV8","0A6C"
"SV9","SV10","SV11","SV12","SV13","SV14","*","*","09F2"
"79RS","79CY","79LO","SH0","SH1","SH2","SH3","SH4","0AAD"
"TRIP","CLOSE","51P1R","51P2R","51N1R","51G1R","51Q1R","51Q2R","0D84"
"SV5T","SV6T","SV7T","SV8T","SV9T","SV10T","SV11T","SV12T","0DA1"
"SV13T","SV14T","*","SALARM","HALARM","OUT1","OUT2","OUT3","0D60"
"PDEM","NDEM","GDEM","QDEM","TRGTR","*","*","*","0A1F"
"LT1", "LT2", "LT3", "LT4", "LT5", "LT6","LT7", "LT8","0A24"
"IN1","IN2","IN3","IN4","IN5","IN6","*","*","0893"
"*", "*", "*", "*", "*", "*", "*", "*", "04D0"<ETX>
```

where:

<STX> = the STX character (02)
<ETX> = the ETX character (03)

the last field in each line = the 4-byte ASCII hex representation of the checksum for the line
* = an unused bit location

The **DNA** command is available from Access Level 1 and higher.

BNA Message

In response to the **BNA** command, the relay sends names of the bits transmitted in the Status Byte in the A5D1 message. The first name is the MSB, the last name is the LSB. The BNA message is:

```
<STX>"*","*","*","STSET","*","*","*","*","0639"<ETX>
```

where:

0639 = the 4-byte ASCII representation of the checksum
* = an unused bit location

The **BNA** command is available from Access Level 1 and higher.

This page intentionally left blank

Appendix E

Compressed ASCII Commands

Overview

The SEL-551C Relay provides Compressed ASCII versions of some relay ASCII commands. The Compressed ASCII commands allow an external device to obtain data from the relay, in a format which directly imports into spreadsheet or database programs, and which can be validated with a checksum.

The SEL-551C provides the following Compressed ASCII commands:

Command	Description
CASCII	Configuration message
CSTATUS	Status message
CHISTORY	History message
CEVENT	Event message

CASCII Command—General Format

The Compressed ASCII configuration message provides data for an external computer to extract data from other Compressed ASCII commands. To obtain the configuration message for the Compressed ASCII commands available in an SEL relay, type:

CAS <CR>

The relay sends:

```
<STX> "CAS",n,"yyyy" <CR>
"COMMAND 1",ll,"yyyy" <CR>
"#H","xxxxx","xxxxx",.......,"xxxxx","yyyy" <CR>
"#D","ddd","ddd","ddd","ddd",.......,"ddd","yyyy" <CR>
"COMMAND 2",ll,"yyyy" <CR>
"#h","ddd","ddd",.......,"ddd","yyyy" <CR>
"#D","ddd","ddd","ddd","ddd",.......,"ddd","yyyy" <CR>
      .
      .
      .
      .
      .
"COMMAND n",ll,"yyyy" <CR>
"#H","xxxxx","xxxxx",.......,"xxxxx","yyyy" <CR>
"#D","ddd","ddd","ddd","ddd",.......,"ddd","yyyy" <CR><ETX>
```

where:

n = the number of Compressed ASCII command descriptions to follow.

COMMAND = the ASCII name for the Compressed ASCII command as sent by the requesting device. The naming convention for the compressed ASCII commands is a C preceding the typical command. For example, **CSTATUS** (abbreviated to **CST**) is the Compressed **STATUS** command.

11 = the minimum access level at which the command is available.

#H identifies a header line to precede one or more data lines; # is the number of subsequent ASCII names. For example, 21H identifies a header line with 21 ASCII labels.

#h identifies a header line to precede one or more data lines; # is the number of subsequent format fields. For example, 8h identifies a header line with 8 format fields.

xxxxx = an ASCII name for corresponding data on following data lines. Maximum ASCII name width is 10 characters.

#D identifies a data format line; # is the maximum number of subsequent data lines.

ddd identifies a format field containing one of the following type designators:

I = Integer data

F = Floating point data

mS = String of maximum m characters (e.g., 10S for a 10-character string

yyyy = the 4-byte hex ASCII representation of the checksum.

A Compressed ASCII command may require multiple header and data configuration lines.

If a Compressed ASCII request is made for data that are not available, (e.g. the history buffer is empty or invalid event request), the relay responds with the following message:

```
<STX>"No Data Available","0668"<CR><ETX>
```

CASCII Command—SEL-551C

Display the SEL-551C Compressed ASCII configuration message by sending:

CAS <CR>

The SEL-551C sends:

```
<STX>
"CAS",5,"01A8"<CR>
"CST",1,"01B7"<CR>
"1H","FID", "022C"<CR>
"1D","45S","0211"<CR>
"23H","MONTH","DAY","YEAR","HOUR","MIN","SEC","MSEC","IA","IB","IC",
"IN","MOF","+5V_PS","+5V_REG"," 5V_REG","+10V_PS"," 10V_PS","VBAT",
"TEMP","RAM","ROM","CR_RAM","EEPROM","2738"<CR>
"1D","I","I","I","I","I","I","I","I","9S","9S","9S","9S","9S","9S","9S","9S","9S","9S",
"9S","9S","9S","9S","9S","9S","15B4"<CR>
"CHI",1,"01A1"<CR>
"1H","FID", "022C"<CR>
"1D","45S","0211"<CR>
"12H","REC_NUM","MONTH","DAY","YEAR","HOUR","MIN","SEC","MSEC",
"EVENT","SHOT","CURR","TARGETS","1654"<CR>
"20D","I","I","I","I","I","I","I","I","6S","I","I","22S","0A70"<CR>
"CEV",1,"01AB"<CR>
"1H","FID", "022C"<CR>
"1D","45S","0211"<CR>
"7H","MONTH","DAY","YEAR","HOUR","MIN","SEC","MSEC","0BB9"<CR>
"1D","I","I","I","I","I","I","I","05F4"<CR>
"15H","SAM/CYC_A","SAM/CYC_D",NUM_OF_CYC","NFREQ","CTR","CTRN","EVENT",
"SHOT","TARGETS","IA","IB","IC","IN","IG","3I2","1BDD"<CR>
"1D","I","I","I","I","I","I","6S","I","22S","F","F","F","F","F","F","0C58"<CR>
"7H","IA","IB","IC","IN","IG","TRIG","Names of elements in the Relay Word separated by
spaces","85F9"<CR>
"60D","F","F","F","F","F","1S","32S","06C4"<CR>
"CEV L",1,"0217"<CR>
"1H","FID", "022C"<CR>
"1D","45S","0211"<CR>
"7H","MONTH","DAY","YEAR","HOUR","MIN","SEC","MSEC","0BB9"<CR>
"1D","I","I","I","I","I","I","I","05F4"<CR>
"15H","SAM/CYC_A","SAM/CYC_D",NUM_OF_CYC","NFREQ","CTR","CTRN","EVENT",
"SHOT","TARGETS","IA","IB","IC","IN","IG","3I2","1BDD"<CR>
"1D","I","I","I","I","I","I","6S","I","22S","F","F","F","F","F","F","0C58"<CR>
"7H","IA","IB","IC","IN","IG","TRIG","Names of elements in the Relay Word separated by
spaces","85F9"<CR>
"120D","F","F","F","F","F","1S","32S","06F1"<CR>
"CEV R",1,"021D"<CR>
"1H","FID", "022C"<CR>
"1D","45S","0211"<CR>
"7H","MONTH","DAY","YEAR","HOUR","MIN","SEC","MSEC","0BB9"<CR>
"1D","I","I","I","I","I","I","I","05F4"<CR>
"15H","SAM/CYC_A","SAM/CYC_D",NUM_OF_CYC","NFREQ","CTR","CTRN","EVENT",
"SHOT","TARGETS","IA","IB","IC","IN","IG","3I2","1BDD"<CR>
"1D","I","I","I","I","I","I","6S","I","22S","F","F","F","F","F","F","0C58"<CR>
"7H","IA","IB","IC","IN","IG","TRIG","Names of elements in the Relay Word separated by
spaces","85F9"<CR>
"256D","F","F","F","F","F","1S","32S","06FB"<CR>
<ETX>
```

CSTATUS Command—SEL-551C

Display status data in Compressed ASCII format by sending:

CST <CR>

The SEL-551C sends:

```
<STX>"FID","0143"<CR>
"Relay FID string","yyyy"<CR>
"MONTH","DAY","YEAR","HOUR","MIN","SEC","MSEC","IA","IB","IC",
"IN","MOF","+5V_PS","+5V_REG","-5V_REG","+10V_PS","-10V_PS",
"VBAT","TEMP","RAM","ROM","CR_RAM","EEPROM","261B" <CR>
xxxx,xxxx,xxxx,xxxx,xxxx,xxxx,xxxx,"xxxx","xxxx","xxxx","xxxx","xxxx","xxxx",
"xxxx","xxxx","xxxx","xxxx","xxxx","xxxx","xxxx","xxxx","xxxx","xxxx","yyyy"
<CR><ETX>
```

where:

xxxx = the data values corresponding to the first line labels

yyyy = the 4-byte hex ASCII representation of the checksum

CHISTORY Command—SEL-551C

Display history data in Compressed ASCII format by sending:

CHI <CR>

The SEL-551C sends:

```
<STX>"FID","0143"<CR>
"Relay FID string","yyyy"<CR>
"REC_NUM","MONTH","DAY","YEAR","HOUR","MIN","SEC","MSEC",
"EVENT","SHOT","CURR","TARGETS","1539"<CR>
xxxx,xxxx,xxxx,xxxx,xxxx,xxxx,xxxx,xxxx,"xxxx",xxxx,xxxx,"xxxx","yyyy"<CR>
<ETX>
```

(the last line is then repeated for each record)

where:

xxxx = the data values corresponding to the first line labels

yyyy = the 4-byte hex ASCII representation of the checksum

CEVENT Command—SEL-551C

Display event report in Compressed ASCII format by sending:

CEV [n x] <CR>

The parameters in brackets, [ ], are optional.

n	=	the number of the event report, as used in the **EVE** command
x	= L	specifies long event report, as used in the **EVE** command
x	= R	specifies raw (unfiltered) analog data, as used in the **EVE** command

The SEL-551C responds to the **CEV** command with the *n*th event report as shown below:

```
<STX>"FID","0143"<CR>
"Relay FID string","yyyy"<CR>
"MONTH","DAY","YEAR","HOUR","MIN","SEC","MSEC","0ACA"<CR>
xxxx,xxxx,xxxx,xxxx,xxxx,xxxx,xxxx,"yyyy" <CR>
"SAM/CYC_A","SAM/CYC_D","NUM_ON_CYC","NFREQ","CTR","CTRN","EVENT",
"SHOT","TARGETS","IA","IB","IC","IN","IG",3I2","1ABF"<CR>
xxxx,xxxx,xxxx,xxxx,xxxx,xxxx,"xxxx",xxxx,"xxxx",xxxx,xxxx,xxxx,xxxx,xxxx,xxxx,
"yyyy"<CR>
"IA","IB","IC","IN","IG","TRIG","Names of elements in the Relay Word separated by spaces","850A"<CR>
xxxx,xxxx,xxxx,xxxx,xxxx,"z","xxxx","HEX-ASCII Relay Word","yyyy"<CR>
<ETX>
```

(the last line is then repeated for each data line in record one)

where:

xxxx =	the data values corresponding to the respective line labels
yyyy =	the 4 byte hex ASCII representation of the checksum
z =	> for the trigger record and empty for all others
SAM/CYC_A =	the number of analog data samples per cycle
SAM/CYC_D =	the number of digital data samples per cycle
NUM_OF_CYC =	the number of cycles of data in the event report
NFREQ =	the nominal system frequency
CTR =	the phase (IA, IB, IC) current transformer ratio
CTRN =	the neutral (IN) current transformer ratio
EVENT =	the event type
SHOT =	the recloser shot counter
TARGETS =	the front-panel tripping targets
IA, IB, IC, IN, IG, 3I2 =	the fault current
HEX-ASCII Relay Word =	the hex ASCII format of the Relay Word. The first element in the Relay Word is the most significant bit in the first character.
TRIG	refers to the event trigger record indication

The **Names of elements in the Relay Word separated by spaces** field is shown below:

```
"51P1 51P2 51N1 51G1 51P1T 51P2T 51N1T 51G1T 51Q1 51Q2 51Q1T 51Q2T 50P1 50P2
50P3 50P4 50P5 50P6 50N1 50N2 50G1 50G2 50Q1 50Q2 50A 50B 50C * * OC CC CF LB1
LB2 LB3 LB4 LB5 LB6 LB7 LB8 RB1 RB2 RB3 RB4 RB5 RB6 RB7 RB8 SV1 SV2 SV3 SV4
SV5 SV6 SV7 SV8 SV9 SV10 SV11 SV12 SV13 SV14 * * 79RS 79CY 79LO SH0 SH1 SH2
SH3 SH4 TRIP CLOSE 51P1R 51P2R 51N1R 51G1R 51Q1R 51Q2R SV5T SV6T SV7T SV8T
SV9T SV10T SV11T SV12T SV13T SV14T * SALARM HALARM OUT1 OUT2 OUT3
PDEM NDEM GDEM QDEM TRGTR * * * LT1 LT2 LT3 LT4 LT5 LT6 LT7 LT8 IN1 IN2
IN3 IN4 IN5 IN6 * * * * * * * * * * "
```

These names are listed in *Table 4.4*. An example HEX-ASCII Relay Word is shown below:

```
"980C00C000000800249B800400000000"
```

Each bit in the HEX-ASCII Relay Word reflects the status of a Relay Word bit. The order of the labels in the **Names of elements in the Relay Word separated by spaces** field matches the order of the HEX-ASCII Relay Word. In the example above, the first two bytes in the HEX-ASCII Relay Word are "98." In binary, this evaluates to 10011000. Mapping the labels to the bits yields:

Table E.1 Mapping Labels to Bits

Labels	51P1	51P2	51N1	51G1	51P1T	51P2T	51N1T	51G1T
Bits	1	0	0	1	1	0	0	0

Appendix F

Setting Negative-Sequence Overcurrent Elements

Setting Negative-Sequence Definite-Time Overcurrent Elements

Negative-sequence instantaneous overcurrent elements 50Q1 and 50Q2 should not be set to trip directly. This is because negative-sequence current can transiently appear when a circuit breaker is closed and balanced load current suddenly appears.

To avoid having negative-sequence instantaneous overcurrent elements trip for this transient condition, delay negative-sequence instantaneous overcurrent elements by at least 1.5 cycles (transient condition lasts less than 1.5 cycles). Use the SELOGIC® Variable timers described in *SELOGIC Control Equation Variables/Timers on page 3.41*.

Effectively, negative-sequence instantaneous overcurrent elements 50Q1 and 50Q2 are turned into negative-sequence definite-time overcurrent elements by running them through timers. Use the timer output for tripping.

Continue reading in *Coordinating Negative-Sequence Overcurrent Elements on page F.3* for guidelines on coordinating negative-sequence definite-time overcurrent elements and a following coordination example. The coordination example uses time-overcurrent elements, but the same principles can be applied to definite-time overcurrent elements.

Setting Negative-Sequence Time-Overcurrent Elements

Negative-sequence time-overcurrent elements 51Q1T and 51Q2T should not be set to trip directly when they are set with low time-dial settings 51Q1TD and 51Q2TD, respectively, that result in curve times below 3 cycles (see curves in *Figure 4.1–Figure 4.10*). This is because negative-sequence current can transiently appear when a circuit breaker is closed and balanced load current suddenly appears.

To avoid having negative-sequence time-overcurrent elements with such low time-dial settings trip for this transient negative-sequence current condition, make settings similar to the following:

SV6PU = **1.500 cycles** (minimum response time; transient condition lasts less than 1.5 cycles)

SV6 = **51Q1** (run pickup of negative-sequence time-overcurrent element 51Q1T through SELOGIC Variable timer SV6)

TR = **..+51Q1T*SV6T+..** (trip conditions; SV6T is the output of the SELOGIC Variable timer SV6)

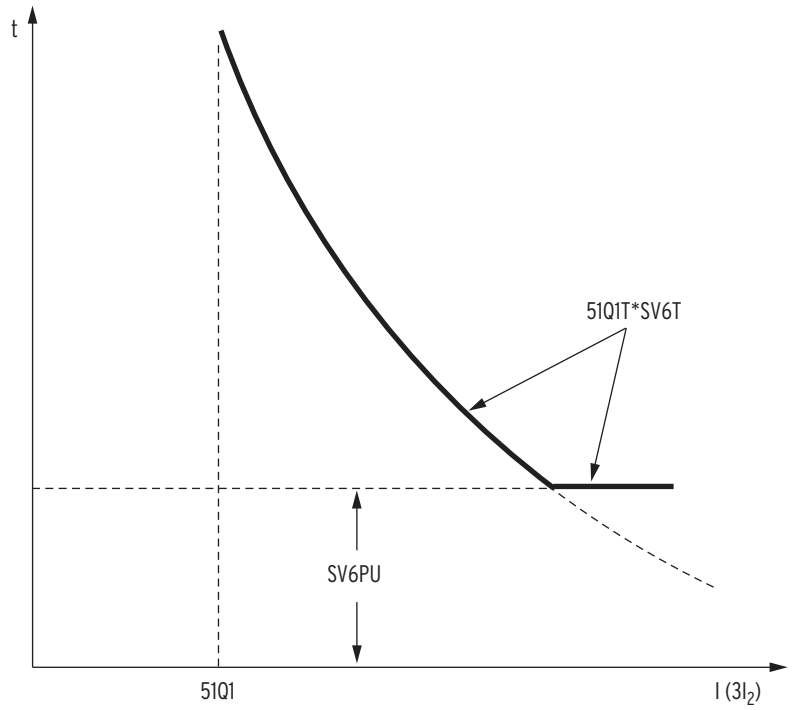

Figure F.1 Minimum Response Time Added to a Negative-Sequence Time-Overcurrent Element

Continue reading in *Coordinating Negative-Sequence Overcurrent Elements on page F.3* for guidelines on coordinating negative-sequence time-overcurrent elements and a following coordination example.

Coordinating Negative-Sequence Overcurrent Elements

The following coordination guidelines and example assume that the negative-sequence overcurrent elements operate on $3I_2$ magnitude negative-sequence current and that the power system is radial. The negative-sequence overcurrent elements in the SEL-551C Relay operate on $3I_2$ magnitude negative-sequence current.

The coordination example is a generic example that can be used with any relay containing negative-sequence overcurrent elements that operate on $3I_2$ magnitude negative-sequence current. The SEL-551C can be inserted as the feeder relay in this example. Note that the overcurrent element labels in the example are not the same as the labels of the corresponding SEL-551C overcurrent elements.

Coordination Guidelines

1. Start with the furthest downstream negative-sequence overcurrent element (e.g., distribution feeder relay in a substation).
2. Identify the phase overcurrent device (e.g., line recloser, fuse) downstream from the negative-sequence overcurrent element that is of greatest concern for coordination.

   This is usually the phase overcurrent device with the longest clearing time.
3. Consider the negative-sequence overcurrent element as an “equivalent” phase overcurrent element.

   Derive pickup, time dial (lever), curve type, or time-delay settings for this “equivalent” element to coordinate with the downstream phase overcurrent device, as any phase coordination would be performed.

   Load considerations can be disregarded when deriving the “equivalent” phase overcurrent element settings.
4. Multiply the “equivalent” phase overcurrent element pickup setting by $\sqrt{3}$ to convert it to the negative-sequence overcurrent element pickup setting in terms of $3I_2$ current.

$$\left.\begin{array}{l}\text{Negative-}\\\text{sequence}\\\text{overcurrent}\\\text{element}\\\text{pickup}\end{array}\right\} = \sqrt{3} \cdot (\text{"equivalent" phase overcurrent element pickup})$$

   Any time dial (lever), curve type, or time delay calculated for the “equivalent” phase overcurrent element is also used for the negative-sequence overcurrent element with no conversion factor applied.
5. Set the next upstream negative-sequence overcurrent element to coordinate with the first downstream negative-sequence overcurrent element and so on.

   Again, coordination is not influenced by load considerations.

Coordination Example

In *Figure F.2* the phase and negative-sequence overcurrent elements of the feeder relay (51F and 51QF, respectively) must coordinate with the phase overcurrent element of the line recloser (51R).

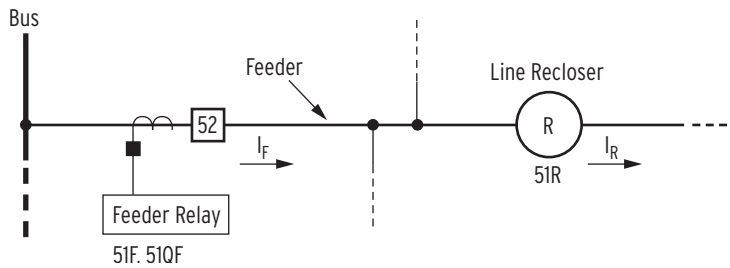

Figure F.2 Distribution Feeder Protective Devices

I_F = Maximum load current through feeder relay = 450 A

I_R = Maximum load current through line recloser = 150 A

51F = Feeder relay phase time-overcurrent element

51QF = Feeder relay negative-sequence time-overcurrent element

51R = Line recloser phase time-overcurrent element (phase "slow curve")

Traditional Phase Coordination

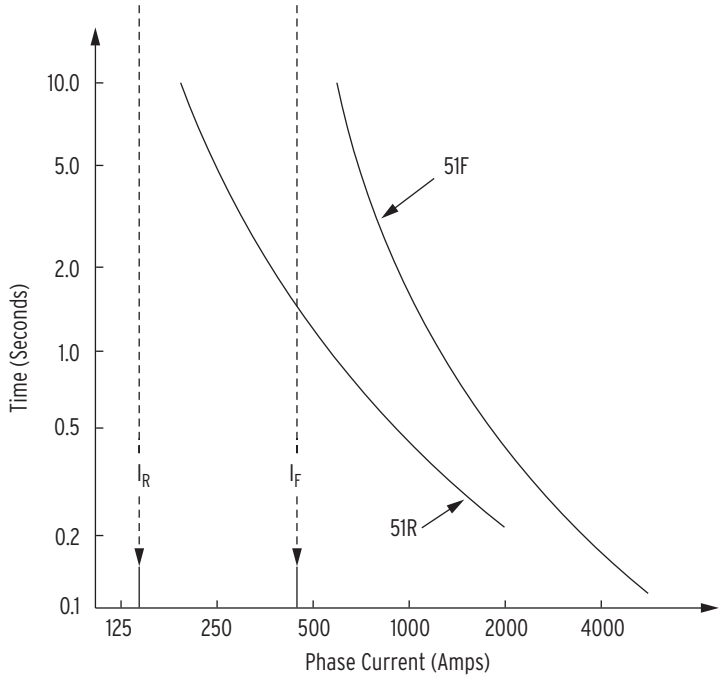

Figure F.3 Traditional Phase Coordination

51F: pickup = 600 A (above max. feeder load, I_F)

51R: pickup = 200 A (above max. line recloser load, I_R)

Figure F.3 shows traditional phase overcurrent element coordination between the feeder relay and line recloser phase overcurrent elements. Phase overcurrent elements must accommodate load and cold load pickup current.

The 450 A maximum feeder load current limits the sensitivity of the feeder phase overcurrent element, 51F, to a pickup of 600 A. The feeder relay cannot back up the line recloser for phase faults below 600 A.

Apply the Feeder Relay Negative-Sequence Overcurrent Element (Guidelines 1 to 3)

Applying negative-sequence overcurrent element coordination *Guideline 1* to *Guideline 3* results in the feeder relay "equivalent" phase overcurrent element (51EP) in *Figure F.4*. Curve for 51F is shown for comparison only.

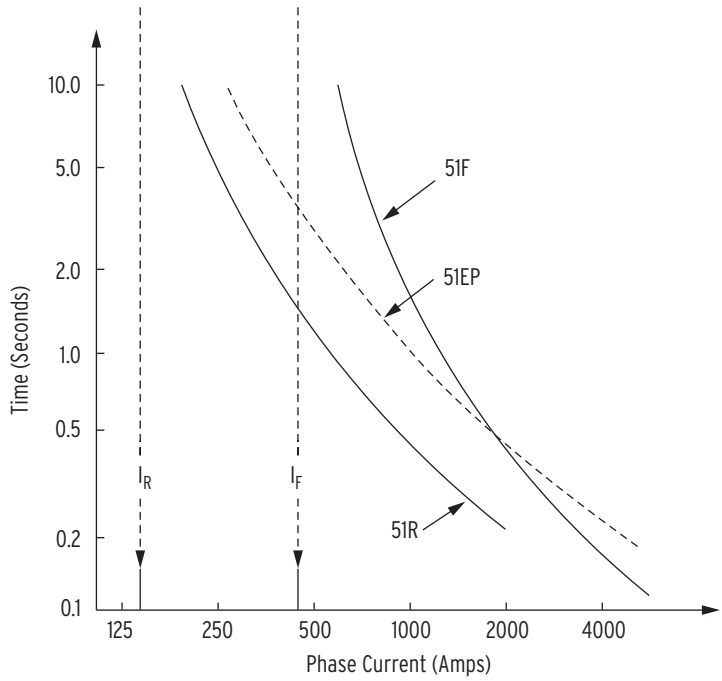

Figure F.4 Phase-to-Phase Fault Coordination

51EP: pickup = 300 A (below max. feeder load, I_F)

Considerable improvement in sensitivity and speed of operation for phase-to-phase faults is achieved with the 51EP element. The 51EP element pickup of 300 A has twice the sensitivity of the 51F element pickup of 600 A. The 51EP element speed of operation for phase-to-phase faults below about 2000 A is faster than that for the 51F element.

Convert "Equivalent" Phase Overcurrent Element Settings to Negative-Sequence Overcurrent Element Settings (Guideline 4)

The "equivalent" phase overcurrent element (51EP element in *Figure F.4*) converts to true negative-sequence overcurrent element settings (51QF in *Figure F.5*) by applying the equation given in guideline 4. The time dial (lever) and curve type of the element remain the same (if the element is a definite-time element, the time delay remains the same).

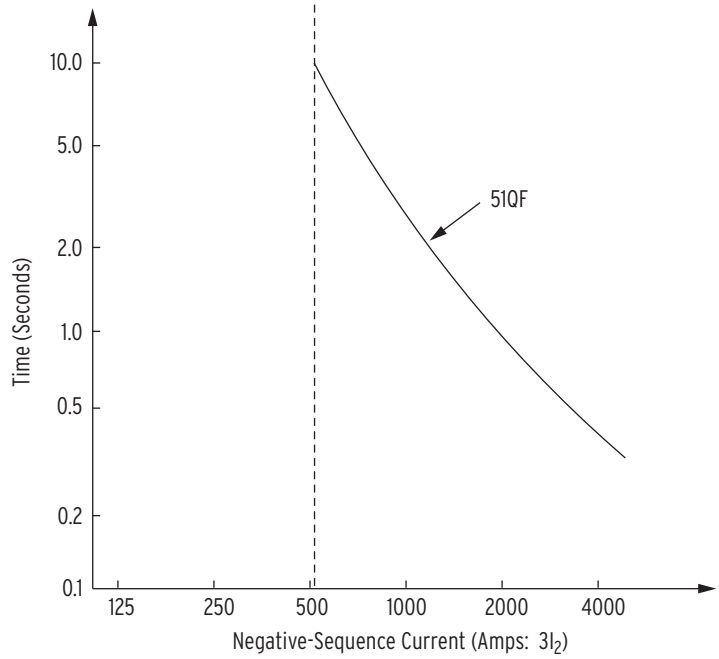

Figure F.5 Negative-Sequence Overcurrent Element Derived From "Equivalent" Phase Overcurrent Element, 51EP

51QF: pickup = $\sqrt{3} \bullet (300\ A) = 520\ A$

Having achieved coordination between the feeder relay negative-sequence overcurrent element (51QF) and the downstream line recloser phase overcurrent element (51R) for phase-to-phase faults, coordination between the two devices for other fault types is also achieved.

Negative-Sequence Overcurrent Element Applied at a Distribution Bus (Guideline 5)

The preceding example was for a distribution feeder. A negative-sequence overcurrent element protecting a distribution bus provides an even more dramatic improvement in phase-to-phase fault sensitivity.

The distribution bus phase overcurrent element pickup must be set above the combined load of all the feeders on the bus, plus any emergency load conditions. The bus phase overcurrent element pickup is often set at least four times greater than the pickup of the feeder phase overcurrent element it backs up. Thus, sensitivity to both bus and feeder phase faults is greatly reduced. Feeder relay backup by the bus relay is limited.

Negative-sequence overcurrent elements at the distribution bus can be set significantly below distribution bus load levels and provide dramatically increased sensitivity to phase-to-phase faults. It is coordinated with the distribution feeder phase or negative-sequence overcurrent elements and provides more sensitive and faster phase-to-phase fault backup.

Ground Coordination Concerns

If the downstream protective device includes ground overcurrent elements, in addition to phase overcurrent elements, there should be no need to check the coordination between the ground overcurrent elements and the upstream negative-sequence overcurrent elements. The downstream phase overcurrent

element, whether it operates faster or slower than its complementary ground overcurrent element, will operate faster than the upstream negative-sequence overcurrent element for all faults, including those that involve ground.

Other Negative-Sequence Overcurrent Element References

A. F. Elneweihi, E. O. Schweitzer, M. W. Feltis, "Negative-Sequence Overcurrent Element Application and Coordination in Distribution Protection," IEEE Transactions on Power Delivery, Volume 8, Number 3, July 1993, pp. 915–924.

This IEEE paper is the source of the coordination guidelines and example given in this appendix. The paper also contains analyses of system unbalances and faults and the negative-sequence current generated by such conditions.

A. F. Elneweihi, "Useful Applications for Negative-Sequence Overcurrent Relaying," 22nd Annual Western Protective Relay Conference, Spokane, Washington, October 24–26, 1995.

This conference paper gives many good application examples for negative-sequence overcurrent elements. The focus is on the transmission system, where negative-sequence overcurrent elements provide better sensitivity than zero-sequence overcurrent elements in detecting some single-line-to-ground faults.

Appendix G

Modbus RTU Communications Protocol

Overview

This appendix describes Modbus® RTU communications features supported by the SEL-551C Relay. Complete specifications for the Modbus protocol are available from the Modicon website at www.modicon.com.

Enable Modbus protocol using the serial port settings. When Modbus protocol is enabled, the relay switches the port to Modbus protocol and deactivates the ASCII protocol.

Modbus RTU is a binary protocol that permits communication between a single master device and multiple slave devices. The communication is half duplex; only one device transmits at a time. The master transmits a binary command that includes the address of the desired slave device. All of the slave devices receive the message, but only the slave device with the matching address responds.

The SEL-551C Modbus communication allows a Modbus master device to:

- Acquire metering, monitoring, and event data from the relay.
- Control SEL-551C output contacts.
- Read the SEL-551C self-test status and learn the present condition of all relay protection elements.

Modbus RTU Communications Protocol

Modbus Queries

Modbus RTU master devices initiate all exchanges by sending a query. The query consists of the fields shown in *Table G.1*.

Table G.1 Modbus Query Fields

Field	Number of Bytes
Slave Device Address	1 byte
Function Code	1 byte
Data Region	0–251 bytes
Cyclical Redundancy Check (CRC)	2 bytes

The SEL-551C SLAVEID setting defines the device address. Set this value to a unique number for each device on the Modbus network. For Modbus communication to operate properly, no two slave devices may have the same address.

Function codes supported by the SEL-551C are described in *Table G.2*.

The cyclical redundancy check detects errors in the received data. If an error is detected, the relay discards the packet.

Modbus Responses

The slave device sends a response message after it performs the action requested in the query. If the slave cannot execute the command for any reason, it sends an error response. Otherwise, the slave device response is formatted similarly to the query including the slave address, function code, data (if applicable), and a cyclical redundancy check value.

Supported Modbus Function Codes

The SEL-551C supports the Modbus function codes shown in *Table G.2*.

Table G.2 SEL-551C Modbus Function Codes

Codes	Description
01h	Read Coil Status
02h	Read Input Status
03h	Read Holding Registers
04h	Read Input Registers
05h	Force Single Coil
06h	Preset Single Register
07h	Read Exception Status
08h	Loopback Diagnostic Command
10h	Preset Multiple Registers
64h	Scattered Register Read

Modbus Exception Responses

The SEL-551C sends an exception code under the conditions described in *Table G.3*.

Table G.3 SEL-551C Modbus Exception Codes

Exception Code	Error Type	Description
01	Illegal Function Code	The received function code is either undefined or unsupported.
02	Illegal Data Address	The received command contains an unsupported address in the data field.
03	Illegal Data Value	The received command contains a value that is out of range.
04	Device Error	The SEL-551C is in the wrong state for the requested function.
06	Busy	The SEL-551C is unable to process the command at this time due to a busy resource.

In the event that any of the errors listed in *Table G.3* occur, the relay assembles a response message that includes the exception code in the data field. The relay sets the most significant bit in the function code field to indicate to the master that the data field contains an error code, instead of the requested data.

Cyclical Redundancy Check

The SEL-551C calculates a 2-byte CRC value using the device address, function code, and data fields. It appends this value to the end of every Modbus response. When the master device receives the response, it recalculates the CRC. If the calculated CRC matches the CRC sent by the SEL-551C, the master device uses the data received. If there is not a match, the check fails and the message is ignored. The devices use a similar process when the master sends queries.

01h Read Coil Status Command

Use function code 01h to read the On/Off status of the selected bits (coils). You may read the status of up to 2000 bits per query. Note that the relay coil addresses start at 0 (e.g., Coil 1 is located at address zero). The relay returns 8 bits per byte, most significant bit first, with zeroes padded into incomplete bytes.

Table G.4 01h Read Coil Status Commands

Bytes	Field
Requests from the master must have the following format:	
1 byte	Slave Address
1 byte	Function Code (01h)
2 bytes	Address of the First Bit
2 bytes	Number of Bits to Read
2 bytes	CRC-16
A successful response from the slave will have the following format:	
1 byte	Slave Address
1 byte	Function Code (01h)
1 byte	Number Bytes of Data (*n*)
n bytes	Data
2 bytes	CRC-16

To build the response, the relay calculates the number of bytes required to contain the number of bits requested. If the number of bits requested is not evenly divisible by 8, the relay adds one more byte to maintain the balance of bits, padded by zeroes to make an even byte.

The relay responses to errors in the query are shown below:

Error	Error Code Returned	Communication Counter Increments
Invalid bit to read	Illegal Data Address (02h)	Invalid Address
Invalid number of bits to read	Illegal Data Value (03h)	Illegal Register
Format error	Illegal Data Value (03h)	Bad Packet Format

Please refer to *Table G.9* for coil number assignments.

02h Read Input Status Command

Use function code 02h to read the On/Off status of the selected bits (coils). You may read the status of up to 2000 bits per query. Note that the relay coil addresses start at 0 (e.g., Coil 1 is located at address zero). The relay returns 8 bits per byte, most significant bit first, with zeroes padded into incomplete bytes.

Table G.5 02h Read Input Status Command

Bytes	Field
Requests from the master must have the following format:	
1 byte	Slave Address
1 byte	Function Code (02h)
2 bytes	Address of the First Bit
2 bytes	Number of Bits to Read
2 bytes	CRC-16
A successful response from the slave will have the following format:	
1 byte	Slave Address
1 byte	Function Code (02h)
1 byte	Number of Bytes of Data (*n*)
n bytes	Data
2 bytes	CRC-16

To build the response, the relay calculates the number of bytes required to contain the number of bits requested. If the number of bits requested is not evenly divisible by 8, the relay adds one more byte to maintain the balance of bits, padded by zeroes to make an even byte.

Input numbers are defined below:

Input Numbers	Description
1	Input 1
2	Input 2
3	Input 3
4	Input 4
5	Input 5
6	Input 6

Input addresses start at 0000 (i.e., input 1 is located at Input Address 0000).

The relay responses to errors in the query are shown below:

Error	Error Code Returned	Communication Counter Increments
Invalid bit to read	Illegal Data Address (02h)	Invalid Address
Invalid number of bits to read	Illegal Data Value (03h)	Illegal Register
Format error	Illegal Data Value (03h)	Bad Packet Format

03h Read Holding Register Command

Use function code 03h to read directly from the Modbus Register map shown in *Table G.18*. You may read a maximum of 125 registers at once with this function code. Most masters use 4X references with this function code. If you are accustomed to 4X references with this function code, for 5 digit addressing, add 40001 to the standard database address.

Table G.6 03h Read Holding Register Command

Bytes	Field
Requests from the master must have the following format:	
1 byte	Slave Address
1 byte	Function Code (03h)
2 bytes	Starting Register Address
2 bytes	Number of Registers to Read
2 bytes	CRC-16
A successful response from the slave will have the following format:	
1 byte	Slave Address
1 byte	Function Code (03h)
1 byte	Number of Bytes of Data (*n*)
n bytes	Data
2 bytes	CRC-16

The relay responses to errors in the query are shown below:

Error	Error Code Returned	Communication Counter Increments
Illegal register to read	Illegal Data Address (02h)	Invalid Address
Illegal number of registers to read	Illegal Data Value (03h)	Illegal Register
Format error	Illegal Data Value (03h)	Bad Packet Format

04h Read Input Registers Command

Use function code 04h to read from the Modbus Register map shown in *Table G.18*. You may read a maximum of 125 registers at once with this function code.

Table G.7 04h Read Holding Register Command

Bytes	Field
Requests from the master must have the following format:	
1 byte	Slave Address
1 byte	Function Code (04h)
2 bytes	Starting Register Address
2 bytes	Number of Registers to Read
2 bytes	CRC-16
A successful response from the slave will have the following format:	
1 byte	Slave Address
1 byte	Function Code (04h)
1 byte	Number of Bytes of Data (*n*)
n bytes	Data
2 bytes	CRC-16

The relay responses to errors in the query are shown below:

Error	Error Code Returned	Communication Counter Increments
Illegal register to read	Illegal Data Address (02h)	Invalid Address
Illegal number of registers to read	Illegal Data Value (03h)	Illegal Register
Format error	Illegal Data Value (03h)	Bad Packet Format

05h Force Single Coil Command

Use function code 05h to set or clear a coil.

Table G.8 05h Force Single Coil Command

Bytes	Field
Requests from the master must have the following format:	
1 byte	Slave Address
1 byte	Function Code (05h)
2 bytes	Coil Reference
1 byte	Operation Code (FF for bit set, 00 for bit clear)
1 byte	Placeholder (00)
2 bytes	CRC-16

The command response is identical to the command request.

The coil numbers supported by the SEL-551C are listed in *Table G.9*. The physical coils (coils 1–5) are self resetting. Pulsing a set remote bit clears the remote bit.

Table G.9 SEL-551C Command Coils

Coil	Field
1	OUT1
2	OUT2
3	OUT3
4	*[a]
5	*[a]
6	RB1
7	RB2
8	RB3
9	RB4
10	RB5
11	RB6
12	RB7
13	RB8
14	Pulse RB1
15	Pulse RB2
16	Pulse RB3
17	Pulse RB4
18	Pulse RB5
19	Pulse RB6
20	Pulse RB7
21	Pulse RB8

[a] Unused in SEL-551C.

The relay responses to errors in the query are shown below:

Error	Error Code Returned	Communication Counter Increments
Invalid bit (coil) number	Illegal Data Address (02h)	Invalid Address
Illegal bit state requested	Illegal Data Value (03h)	Illegal Function Code/Op Code
Format error	Illegal Data Value (03h)	Bad Packet Format

06h Preset Single Register Command

The SEL-551C uses this function to allow a Modbus master to write directly to a database register. If you are accustomed to 4X references with this function code, for 6-digit addressing, add 400001 to the standard database addresses.

Table G.10 06h Preset Single Register Command

Bytes	Field
Requests from the master must have the following format:	
1 byte	Slave Address
1 byte	Function Code (06h)
2 bytes	Register Address
2 bytes	Data
2 bytes	CRC-16

The command response is identical to the command request.

The relay responses to errors in the query are shown below:

Error	Error Code Returned	Communication Counter Increments
Illegal register address	Illegal Data Address (02h)	Invalid Address Illegal Write
Illegal register value	Illegal Data Value (03h)	Illegal Write
Format error	Illegal Data Value (03h)	Bad Packet Format

07h Read Exception Status Command

The SEL-551C uses this function to allow a Modbus master to read the present status of the relay and protected circuit.

Table G.11 07h Read Exception Status Command (Sheet 1 of 2)

Bytes	Field
Requests from the master must have the following format:	
1 byte	Slave Address
1 byte	Function Code (07h)
0 bytes	No Data Fields Are Sent
2 bytes	CRC-16
A successful response from the slave will have the following format:	
1 byte	Slave Address
1 byte	Function Code (07h)
1 byte	Status Byte
2 bytes	CRC-16

Table G.11 07h Read Exception Status Command (Sheet 2 of 2)

Bytes	Field
The status byte is sent most significant bit first, and consists of the following bits:	
Bit 0	OUT3 Status
Bit 1	OUT2 Status
Bit 2	OUT1 Status
Bit 3	Input 4 Status
Bit 4	Input 3 Status
Bit 5	Input 2 Status
Bit 6	Input 1 Status
Bit 7	Relay Status

If the bit is set to 1, the following are true:

- Output and Alarm contacts are asserted.
- Relay inputs are asserted.
- Relay is disabled.

If the bit is set to 0, the following are true:

- Output and Alarm contacts are deasserted.
- Relay inputs are deasserted.
- Relay is enabled.

The relay response to errors in the query is shown below:

Error	Error Code Returned	Communication Counter Increments
Format error	Illegal Data Value (03h)	Bad Packet Format

08h Loopback Diagnostic Command

The SEL-551C uses this function to allow a Modbus master to perform a diagnostic test on the Modbus communications channel and relay. When the subfunction field is 0000h, the relay returns a replica of the received message.

Table G.12 08h Loopback Diagnostic Command (Sheet 1 of 2)

Bytes	Field
Requests from the master must have the following format:	
1 byte	Slave Address
1 byte	Function Code (08h)
2 bytes	Subfunction (0000h)
2 bytes	Data Field
2 bytes	CRC-16
A successful response from the slave will have the following format:	
1 byte	Slave Address
1 byte	Function Code (08h)
2 bytes	Subfunction (0000h)

Table G.12 08h Loopback Diagnostic Command (Sheet 2 of 2)

Bytes	Field
2 bytes	Data Field (identical to data in Master request)
2 bytes	CRC-16

The relay responses to errors in the query are shown below:

Error	Error Code Returned	Communication Counter Increments
Illegal subfunction code	Illegal Data Value (03h)	Illegal Function Code/Op Code
Format error	Illegal Data Value (03h)	Bad Packet Format

10h Preset Multiple Registers Command

This function code works much like code 06h, except that it allows you to write multiple registers at once, up to 100 per operation. If you are accustomed to 4X references with the function code, for 6-digit addressing, simply add 400001 to the standard database addresses.

Table G.13 10h Preset Multiple Registers Command

Bytes	Field
Requests from the master must have the following format:	
1 byte	Slave Address
1 byte	Function Code (10h)
2 bytes	Starting Address
2 bytes	Number of Registers to Write
1 byte	Number of Bytes of Data (*n*)
n bytes	Data
2 bytes	CRC-16
A successful response from the slave will have the following format:	
1 byte	Slave Address
1 byte	Function Code (10h)
2 bytes	Starting Address
2 bytes	Number of Registers
2 bytes	CRC-16

The relay responses to errors in the query are shown below:

Error	Error Code Returned	Communication Counter Increments
Illegal register to set	Illegal Data Address (02h)	Invalid Address Illegal Write
Illegal number of registers to set	Illegal Data Value (03h)	Illegal Register Illegal Write
Incorrect number of bytes in query data region	Illegal Data Value (03h)	Bad Packet Format Illegal Write
Invalid register data value	Illegal Data Value (03h)	Illegal Write

64h Scattered Register Read

The SEL-551C uses this function to allow a Modbus master to read noncontiguous registers in a single request. A maximum of 100 registers can be read in a single query.

Table G.14 64h Scattered Register Read Command

Bytes	Field
Requests from the master must have the following format:	
1 byte	Slave Address
1 byte	Function Code (64h)
1 byte	Query Data Length
1 byte	Subfunction Code (04h)[a]
1 byte	Transmission Number
2 bytes	Address of First Register
2 bytes	Address of Second Register
•	•
•	•
•	•
2 bytes	Address of *n*th Register
2 bytes	CRC-16
A successful response from the slave will have the following format:	
1 byte	Slave Address
1 byte	Function Code (64h)
1 byte	Response Data Length
1 byte	Subfunction Code (04h)[a]
1 byte	Transmission Number
2 bytes	Data from First Register
2 bytes	Data from Second Register
•	•
•	•
•	•
2 bytes	Data from *n*th Register
2 bytes	CRC-16

[a] Only subfunction 04h is supported.

The relay responses to errors in the query are shown below:

Error	Error Code Returned	Communication Counter Increments
Incorrect/Illegal query data length	Illegal Data Value (03h)	Bad Packet Format
Invalid subfunction code	Illegal Data Value (03h)	Illegal Function Code/Op Code
Illegal register address	Illegal Data Address (02h)	Invalid Address

Controlling Output Contacts

The SEL-551C Modbus Register Map (*Table G.18*) includes three fields that allow a Modbus master to force the relay to perform a variety of operations. Use Modbus function codes 06h or 10h to write the appropriate command

codes and parameters into the registers shown in *Table G.15*. If function code 06h is used to write to a command code that has parameters, the parameters must be written before the command code.

Table G.15 SEL-551C Modbus Command Region

Address	Field
0090h	Command Code
0091h	Parameter 1
0092h	Parameter 2

Table G.16 defines the command codes, their function and associated parameters, and the Modbus function code used to initiate the related command code.

Table G.16 Modbus Command Codes

Command Code	Function	Parameter Definition	Modbus Function Code
01	Open	No Parameter	06h, 10h
02	Close	No Parameter	06h, 10h
03	Reset Targets	No Parameter	06h, 10h
04	Trigger	No Parameter	06h, 10h
05	Pulse OUT1	1–30 seconds duration (defaults to 1 second)	06h, 10h
06	Pulse OUT2	1–30 seconds duration (defaults to 1 second)	06h, 10h
07	Pulse OUT3	1–30 seconds duration (defaults to 1 second)	06h, 10h
08	*[a]		
09	*[a]		
10	Switch Protocol[b]	0080h	06h, 10h
11[c]	Reset Data Regions	0000 0000 0000 0001 Demand Metering 0000 0000 0000 0010 Peak Metering 0000 0000 0000 0100 History Buffer 0000 0000 0000 1000 Communication Counters	06h, 10h

[a] Not used in the SEL-551C.
[b] Switches the serial port protocol to SEL ASCII, the baud rate, parity, stop bits, and flow control remain the same.
[c] Parameter of Command code 11 is bit masked to allow you to manipulate several data regions simultaneously.

Remote Bits

Command Code 0Ch-Control Remote Bits:

This code controls the remote bits. This command code has two parameters.

Parameter 1 determines the bit operation.

Value	Operation
1	Set
2	Clear
3	Pulse (1/8 cycle)

Parameter 2 determines which bit to control. It is bitmasked for future expansion, but only one bit can be controlled at a time. The highest numbered bit will be controlled if more than one bit occurs in the parameter.

Bit Pattern	Remote Bit
0000 0000 0000 0001	RB1
0000 0000 0000 0010	RB2
0000 0000 0000 0100	RB3
0000 0000 0000 1000	RB4
0000 0000 0001 0000	RB5
0000 0000 0010 0010	RB6
0000 0000 0100 0000	RB7
0000 0000 1000 0000	RB8

Error Codes:

- If the relay is disabled while the commands are issued, the relay will return error code 04 (device error).
- If the **TRIGGER** command cannot be executed due to multiple events in progress, the relay will return error code 06h (device busy).
- If the breaker jumper is not installed when a pulse output command is issued, the relay will return error code 04h (device error).

Reading Event Data Using Modbus

The Modbus Register Map (*Table G.18*) provides a feature that allows you to download complete event data via Modbus. The SEL-551C stores the 20 latest 15-cycle, full-length event reports. Please refer to *Section 7: Standard Event Reports and SER* for more detailed description.

The event report will contain both analog and digital data. To download the event data using Modbus, proceed as follows:

Step 1. Write the event number you wish to download at address 00B1h.

Step 2. Write the channel number you wish to download at address 00B2h.

Step 3. Read the four-sample per cycle event data from the Modbus Map.

Table G.17 Assign Event Report Channel Using Address 00B2 (Sheet 1 of 2)

Set 00B2	To Read Data From Channel
1	IA
2	IB
3	IC
4	IN
5	IG
6	Relay Element Status Row 1[a]
7	Relay Element Status Row 2[a]
8	Relay Element Status Row 3[a]

Table G.17 Assign Event Report Channel Using Address 00B2 (Sheet 2 of 2)

Set 00B2	To Read Data From Channel
9	Relay Element Status Row 4[a]
10	Relay Element Status Row 5[a]
11	Relay Element Status Row 6[a]
12	Relay Element Status Row 7[a]
13	Relay Element Status Row 8[a]
14	Relay Element Status Row 9[a]
15	Relay Element Status Row 10[a]
16	Relay Element Status Row 11[a]
17	Relay Element Status Row 12[a]
18	Relay Element Status Row 13[a]
19	Relay Element Status Row 14[a]
20	Relay Element Status Row 15[a]

[a] Please refer to Table 5.6 to obtain the contents of each relay element status row. Relay Element Status Row 0, which represents targets, is displayed at 00FB in the Modbus Map.

If the user selects an event number for which there are no data available, 8000h will be returned.

Reading History Data Using Modbus

The Modbus Register Map (*Table G.18*) provides a feature that allows you to download complete history of the last 20 events via Modbus. The history contains the date and time stamp, type of event that triggered the report, and the targets. Please refer to Note 3 of the Modbus Map for a list of event types.

To download the history data using Modbus, write the event number (1–20) to address 00A1h. Then read the history of the specific event number you requested from the Modbus Map (*Table G.18*).

If the user selects a history number for which there are no data available, 8000h will be returned.

Table G.18 Modbus Map (Sheet 1 of 16)

Address (Hex)	Field	Units	Range			Scale Factor
			Low	High	Step	
Relay ID						
0000–0016	FID[a]	ASCII String	–	–	–	–
0017–0019	Revision[a]	ASCII String	–	–	–	–
001A–0022	Relay ID[a]	ASCII String	–	–	–	–
0023–002B	Terminal ID[a]	ASCII String	–	–	–	–
002C	Reserved (see Note 1)					
002D	Device Tag #[b]	15043	–	–	–	–
002E	Feature Set ID[b]	1	–	–	–	–
002F	Reserved					

Table G.18 Modbus Map (Sheet 2 of 16)

Address (Hex)	Field	Units	Range			Scale Factor
			Low	High	Step	
Relay Status						
0030	Channel IA offset value[c]	mV	–5000	5000	1	1
0031	Channel IA status message[b] 0 = OK, 1 = Warn, 2 = Fail	–	–	–	–	–
0032	Channel IB offset value[c]	mV	–5000	5000	1	1
0033	Channel IB status message[b] 0 = OK, 1 = Warn, 2 = Fail	–	–	–	–	–
0034	Channel IC offset value[c]	mV	–5000	–5000	1	1
0035	Channel IC status message[b] 0 = OK, 1 = Warn, 2 = Fail	–	–	–	–	–
0036	Channel IN offset value[c]	mV	–5000	5000	1	1
0037	Channel IN status message[b] 0 = OK, 1 = Warn, 2 = Fail	–	–	–	–	–
0038	(MOF) DC offset in A/D circuit when a grounded input is selected[c]	mV	–5000	5000	1	1
0039	MOF status message[b] 0 = OK, 1 = Warn, 2 = Fail	–	–	–	–	–
003A	+5 V power supply voltage value[b]	V	0	600	1	0.01
003B	+5 V power[b] supply status message 0 = OK, 1 = Warn, 2 = Fail	–	–	–	–	–
003C	+5_REG power[b] supply value	V	0	600	1	0.01
003D	+5_REG power supply status message[b] 0 = OK, 1 = Warn, 2 = Fail	–	–	–	–	–

Table G.18 Modbus Map (Sheet 3 of 16)

Address (Hex)	Field	Units	Range			Scale Factor
			Low	High	Step	
003E	–5_REG power supply value[c]	V	–600	0	1	0.01
003F	–5_REG power supply status message[b] 0 = OK, 1 = Warn, 2 = Fail	–	–	–	–	–
0040	+10_ps power supply value[b]	V	0	1500	1	0.01
0041	+10_ps power supply status message[b] 0 = OK, 1 = Warn, 2 = Fail	–	–	–	–	–
0042	–10_ps power supply value[c]	V	–1500	0	1	0.01
0043	–10_ps power supply status message[b] 0 = OK, 1 = Warn, 2 = Fail	–	–	–	–	–
0044	VBAT power supply value[b]	V	0	500	1	0.01
0045	VBAT power supply status message[b] 0 = OK, 1 = Warn, 2 = Fail	–	–	–	–	–
0046	TEMP in degrees Celsius[c]	°C	–100	100	1	1
0047	Temperature status[b] 0 = OK, 1 = Warn, 2 = Fail	–	–	–	–	–
0048	RAM status[b] 0 = OK, 2 = Fail	–	–	–	–	–
0049	ROM status[b] 0 = OK, 2 = Fail	–	–	–	–	–
004A	CR_RAM status[b] 0 = OK, 2 = Fail	–	–	–	–	–
004B	EEPROM status[b] 0 = OK, 2 = Fail	–	–	–	–	–
004C	Enable status[b] 0 = relay enabled, 2 = relay disabled	–	–	–	–	–
004D–004F	Reserved					

Table G.18 Modbus Map (Sheet 4 of 16)

Address (Hex)	Field	Units	Range			Scale Factor
			Low	High	Step	
Demand Meter						
0050	Demand current phase A[b]	Amps	0	65535	1	1
0051	Demand current phase B[b]	Amps	0	65535	1	1
0052	Demand current phase C[b]	Amps	0	65535	1	1
0053	Demand current I_N[b]	Amps	0	65535	1	1
0054	Demand residual current I_G[b]	Amps	0	65535	1	1
0055	Demand negative-sequence current $3I_2$[b]	Amps	0	65535	1	1
Last Reset Time and Date—Demand Metering						
0056	Time	ss	0	59	1	1
0057		mm	0	59	1	1
0058		hh	0	23	1	1
0059	Date	dd	1	31	1	1
005A		mm	1	12	1	1
005B		yyyy	1992	2999	1	1
Peak Demand Meter						
005C	Peak demand current phase A[b]	Amps	0	65535	1	1
005D	Peak demand current phase B[b]	Amps	0	65535	1	1
005E	Peak demand current phase C[b]	Amps	0	65535	1	1
005F	Peak demand neutral current I_N[b]	Amps	0	65535	1	1
0060	Peak demand residual current I_G[b]	Amps	0	65535	1	1
0061	Peak demand negative-sequence current $3I_2$[b]	Amps	0	65535	1	1
Last Reset Time and Date—Peak Demand Metering						
0062	Time	ss	0	59	1	1
0063		mm	0	59	1	1
0064		hh	0	23	1	1
0065	Date	dd	1	31	1	1
0066		mm	1	12	1	1
0067		yyyy	1992	2999	1	1
Instantaneous Metering						
0068	Inst. current phase A[b]	Amps	0	65535	1	1
0069	Inst. current phase A angle[b]	Degrees	0	36000	1	0.01

Table G.18 Modbus Map (Sheet 5 of 16)

Address (Hex)	Field	Units	Range			Scale Factor
			Low	High	Step	
006A	Inst. current phase B[b]	Amps	0	65535	1	1
006B	Inst. current phase B angle[b]	Degrees	0	36000	1	0.01
006C	Inst. current phase C[b]	Amps	0	65535	1	1
006D	Inst. current phase C angle[b]	Degrees	0	36000	1	0.01
006E	Inst. neutral current[b]	Amps	0	65535	1	1
006F	Inst. neutral current angle[b]	Degrees	0	36000	1	0.01
0070	Inst. residual current[b]	Amps	0	65535	1	1
0071	Inst. residual current angle[b]	Degrees	0	36000	1	0.01
0072	Inst. negative-sequence current[b]	Amps	0	65535	1	1
0073	Inst. neg.-seq. current angle[b]	Degrees	0	36000	1	0.01
0074	Reserved					
0075	Reserved					
Relay Time and Date						
0076 (RW) (see Note 2)	Time[b]	ss	0	59	1	1
0077 (RW)	[b]	mm	0	59	1	1
0078 (RW)	[b]	hh	0	23	1	1
0079 (RW)	Date[b]	dd	1	31	1	1
007A (RW)	[b]	mm	1	12	1	1
007B (RW)	[b]	yyyy	1992	2999	1	1
007C–007F	Reserved					
Relay Word						
0080	Targets Bit 0 = 1 if any of bits 8–15 are set to 1 Bit 0 = 0 if any of bits 8–15 are set to 0 Bits 1–7 = 0 Bit 8 =Phase N 51/50 Bit 9 = Phase C 51/50 Bit 10 = Phase B 51/50 Bit 11 = Phase A 51/50 Bit 12 = LO					

Table G.18 Modbus Map (Sheet 6 of 16)

Address (Hex)	Field	Units	Range			Scale Factor
			Low	High	Step	
	Bit 13 = RS					
	Bit 14 = Inst.					
	Bit 15 = Enable					
0081	Contact Status					
	Bit 0 = 1 if any of bits 1–15 are set to 1					
	Bit 0 = 0 if all of bits 1–15 are set to 0					
	Bits 1–6 = 0					
	Bit 7 = OUT3					
	Bit 8 = OUT2					
	Bit 9 = OUT1					
	Bit 10 = IN6					
	Bit 11 = IN5					
	Bit 12 = IN4					
	Bit 13 = IN3					
	Bit 14 = IN2					
	Bit 15 = IN1					
0082	Row 1					
	Bit 0 = 1 if any of bits 8–15 are set to 1					
	Bit 0 = 0 if all of bits 8–15 are set to 0					
	Bits 1–7 = 0					
	Bit 8 = 51G1T					
	Bit 9 = 51N1T					
	Bit 10 = 51P2T					
	Bit 11 = 51P1T					
	Bit 12 = 51G1					
	Bit 13 = 51N1					
	Bit 14 = 51P2					
	Bit 15 = 51P1					
0083	Row 2					
	Bit 0 = 1 if any of bits 8–15 are set to 1					
	Bit 0 = 0 if all of bits 8–15 are set to 0					
	Bits 1–7 = 0					

Table G.18 Modbus Map (Sheet 7 of 16)

Address (Hex)	Field	Units	Range			Scale Factor
			Low	High	Step	
	Bit 8 = 50P4					
	Bit 9 = 50P3					
	Bit 10 = 50P2					
	Bit 11 = 50P1					
	Bit 12 = 51Q2T					
	Bit 13 = 51Q1T					
	Bit 14 = 51Q2					
	Bit 15 = 51Q1					
0084	Row 3					
	Bit 0 = 1 if any of bits 8–15 are set to 1					
	Bit 0 = 0 if all of bits 8–15 are set to 0					
	Bits 1–7 = 0					
	Bit 8 = 50Q2					
	Bit 9 = 50Q1					
	Bit 10 = 50G2					
	Bit 11 = 50G1					
	Bit 12 = 50N2					
	Bit 13 = 50N1					
	Bit 14 = 50P6					
	Bit 15 = 50P5					
0085	Row 4					
	Bit 0 = 1 if any of bits 8–15 are set to 1					
	Bit 0 = 0 if all of bits 8–15 are set to 0					
	Bits 1–7 = 0					
	Bit 8 = CF					
	Bit 9 = CC					
	Bit 10 = OC					
	Bit 11 = 0					
	Bit 12 = 0					
	Bit 13 = 50C					
	Bit 14 = 50B					
	Bit 15 = 50A					
0086	Row 5					

Table G.18 Modbus Map (Sheet 8 of 16)

Address (Hex)	Field	Units	Range			Scale Factor
			Low	High	Step	
	Bit 0 = 1 if any of bits 8–15 are set to 1					
	Bit 0 = 0 if all of bits 8–15 are set to 0					
	Bits 1–7 = 0					
	Bit 8 = LB8					
	Bit 9 = LB7					
	Bit 10 = LB6					
	Bit 11 = LB5					
	Bit 12 = LB4					
	Bit 13 = LB3					
	Bit 14 = LB2					
	Bit 15 = LB1					
0087	Row 6					
	Bit 0 = 1 if any of bits 8–15 are set to 1					
	Bit 0 = 0 if all of bits 8–15 are set to 0					
	Bits 1–7 = 0					
	Bit 8 = RB8					
	Bit 9 = RB7					
	Bit 10 = RB6					
	Bit 11 = RB5					
	Bit 12 = RB4					
	Bit 13 = RB3					
	Bit 14 = RB2					
	Bit 15 = RB1					
0088	Row 7					
	Bit 0 = 1 if any of bits 8–15 are set to 1					
	Bit 0 = 0 if all of bits 8–15 are set to 0					
	Bits 1–7 = 0					
	Bit 8 = SV8					
	Bit 9 = SV7					
	Bit 10 = SV6					
	Bit 11 = SV5					
	Bit 12 = SV4					

Table G.18 Modbus Map (Sheet 9 of 16)

Address (Hex)	Field	Units	Range			Scale Factor
			Low	High	Step	
	Bit 13 = SV3					
	Bit 14 = SV2					
	Bit 15 = SV1					
0089	Row 8					
	Bit 0 = 1 if any of bits 8–15 are set to 1					
	Bit 0 = 0 if all of bits 8–15 are set to 0					
	Bits 1–7 = 0					
	Bit 8 = 0					
	Bit 9 = 0					
	Bit 10 = SV14					
	Bit 11 = SV13					
	Bit 12 = SV12					
	Bit 13 = SV11					
	Bit 14 = SV10					
	Bit 15 = SV9					
008A	Row 9					
	Bit 0 = 1 if any of bits 8–15 are set to 1					
	Bit 0 = 0 if all of bits 8–15 are set to 0					
	Bits 1–7 = 0					
	Bit 8 = SH4					
	Bit 9 = SH3					
	Bit 10 = SH2					
	Bit 11 = SH1					
	Bit 12 = SH0					
	Bit 13 = 79LO					
	Bit 14 = 79CY					
	Bit 15 = 79RS					
008B	Row 10					
	Bit 0 = 1 if any of bits 8–15 are set to 1					
	Bit 0 = 0 if all of bits 8–15 are set to 0					
	Bits 1–7 = 0					
	Bit 8 = 51Q2R					

Table G.18 Modbus Map (Sheet 10 of 16)

Address (Hex)	Field	Units	Range			Scale Factor
			Low	High	Step	
	Bit 9 = 51Q1R					
	Bit 10 = 51G1R					
	Bit 11 = 51N1R					
	Bit 12 = 51P2R					
	Bit 13 = 51P1R					
	Bit 14 = CLOSE					
	Bit 15 = TRIP					
008C	Row 11					
	Bit 0 = 1 if any of bits 8–15 are set to 1					
	Bit 0 = 0 if all of bits 8–15 are set to 0					
	Bits 1–7 = 0					
	Bit 8 = SV12T					
	Bit 9 = SV11T					
	Bit 10 = SV10T					
	Bit 11 = SV9T					
	Bit 12 = SV8T					
	Bit 13 = SV7T					
	Bit 14 = SV6T					
	Bit 15 = SV5T					
008D	Row 12					
	Bit 0 = 1 if any of bits 8–15 are set to 1					
	Bit 0 = 0 if all of bits 8–15 are set to 0					
	Bits 1–7 = 0					
	Bit 8 = OUT3					
	Bit 9 = OUT2					
	Bit 10 = OUT1					
	Bit 11 = HALARM					
	Bit 12 = SALARM					
	Bit 13 = 0					
	Bit 14 = SV14T					
	Bit 15 = SV13T					
008E	Row 13					
	Bit 0 = 1 if any of bits 8–15 are set to 1					

Table G.18 Modbus Map (Sheet 11 of 16)

Address (Hex)	Field	Units	Range			Scale Factor
			Low	High	Step	
	Bit 0 = 0 if all of bits 8–15 are set to 0					
	Bits 1–7 = 0					
	Bit 8 = 0					
	Bit 9 = 0					
	Bit 10 = 0					
	Bit 11 = TRGTR					
	Bit 12 = QDEM					
	Bit 13 = GDEM					
	Bit 14 = NDEM					
	Bit 15 = PDEM					
008F	Row 14					
	Bit 0 = 1 if any of bits 8–15 are set to 1					
	Bit 0 = 0 if all of bits 8–15 are set to 0					
	Bits 1–7 = 0					
	Bit 8 = LT8					
	Bit 9 = LT7					
	Bit 10 = LT6					
	Bit 11 = LT5					
	Bit 12 = LT4					
	Bit 13 = LT3					
	Bit 14 = LT2					
	Bit 15 = LT1					
0090	Row 15					
	Bit 0 = 1 if any of bits 8–15 are set to 1					
	Bit 0 = 0 if all of bits 8–15 are set to 0					
	Bits 1–7 = 0					
	Bit 8 = 0					
	Bit 9 = 0					
	Bit 10 = IN6					
	Bit 11 = IN5					
	Bit 12 = IN4					
	Bit 13 = IN3					
	Bit 14 = IN2					

Table G.18 Modbus Map (Sheet 12 of 16)

Address (Hex)	Field	Units	Range			Scale Factor
			Low	High	Step	
	Bit 15 = IN1					
Commands (see Note 5)						
00A0 (W)	Command Code		1	12		
00A1(W)	Parameter 1					
00A2 (W)	Parameter 2					
00A3–00AF	Reserved					
History Records						
00B0	Number of History Records[b]		1	20	1	1
00B1(RW)	History Selection[b]		1	20	1	1
00B2	Event Time[b]	millisec	0	999	1	1
00B3	[b]	ss	0	59	1	1
00B4	[b]	mm	0	59	1	1
00B5	[b]	hh	0	23	1	1
00B6	Event Date[b]	dd	1	31	1	1
00B7	[b]	mm	1	12	1	1
00B8	[b]	yyyy	1992	2999	1	1
00B9	Event Type[a]	ASCII string				
00BA		see Note 3				
00BB						
00BC						
00BD	Shot		0	4	1	1
00BE	Maximum phase current		0	65535	1	1
00BF	Targets					
	Bit 0 = 1 if any of bits 8–15 are set to 1					
	Bit 0 = 0 if all of bits 8–15 are set to 0					
	Bit 1–7 = 0					
	Bit 8 = Phase N 51/50					
	Bit 9 = Phase C 51/50					
	Bit 10 = Phase B 51/50					
	Bit 11 = Phase A 51/50					
	Bit 12 = LO					
	Bit 13 = RS					
	Bit 14 = Inst.					

Table G.18 Modbus Map (Sheet 13 of 16)

Address (Hex)	Field	Units	Range			Scale Factor
			Low	High	Step	
	Bit 15 = 0					
Event Reporting (see Note 4)						
00C0	Number event records[b]	–	1	20	1	1
00C1	Event selection[b]	–	1	20	1	1
00C2	Channel selection[b]	–	1	18	1	1
00C3	1/4 cycle[c]		–32767	32767	1	1
00C4	1/2 cycle[c]		–32767	32767	1	1
00C5	3/4 cycle[c]		–32767	32767	1	1
00C6	1 cycle[c]		–32767	32767	1	1
00C7	1 1/4 cycle[c]		–32767	32767	1	1
00C8	1 1/2 cycle[c]		–32767	32767	1	1
00C9	1 3/4 cycle[c]		–32767	32767	1	1
00CA	2 cycle[c]		–32767	32767	1	1
00CB	2 1/4 cycle[c]		–32767	32767	1	1
00CC	2 1/2 cycle[c]		–32767	32767	1	1
00CD	2 3/4 cycle[c]		–32767	32767	1	1
00CE	3 cycle[c]		–32767	32767	1	1
00CF	3 1/4 cycle[c]		–32767	32767	1	1
00D0	3 1/2 cycle[c]		–32767	32767	1	1
00D1	3 3/4 cycle[c]		–32767	32767	1	1
00D2	4 cycle[c]		–32767	32767	1	1
00D3	4 1/4 cycle[c]		–32767	32767	1	1
00D4	4 1/2 cycle[c]		–32767	32767	1	1
00D5	4 3/4 cycle[c]		–32767	32767	1	1
00D6	5 cycle[c]		–32767	32767	1	1
00D7	5 1/4 cycle[c]		–32767	32767	1	1
00D8	5 1/2 cycle[c]		–32767	32767	1	1
00D9	5 3/4 cycle[c]		–32767	32767	1	1
00DA	6 cycle[c]		–32767	32767	1	1
00DB	6 1/4 cycle[c]		–32767	32767	1	1
00DC	6 1/2 cycle[c]		–32767	32767	1	1
00DD	6 3/4 cycle[c]		–32767	32767	1	1
00DE	7 cycle[c]		–32767	32767	1	1
00DF	7 1/4 cycle[c]		–32767	32767	1	1
00E0	7 1/2 cycle[c]		–32767	32767	1	1
00E1	7 3/4 cycle[c]		–32767	32767	1	1
00E2	8 cycle[c]		–32767	32767	1	1
00E3	8 1/4 cycle[c]		–32767	32767	1	1
00E4	8 1/2 cycle[c]		–32767	32767	1	1

Table G.18 Modbus Map (Sheet 14 of 16)

Address (Hex)	Field	Units	Range			Scale Factor
			Low	High	Step	
00E5	8 3/4 cycle[c]		–32767	32767	1	1
00E6	9 cycle[c]		–32767	32767	1	1
00E7	9 1/4 cycle[c]		–32767	32767	1	1
00E8	9 1/2 cycle[c]		–32767	32767	1	1
00E9	9 3/4 cycle[c]		–32767	32767	1	1
00EA	10 cycle[c]		–32767	32767	1	1
00EB	10 1/4 cycle[c]		–32767	32767	1	1
00EC	10 1/2 cycle[c]		–32767	32767	1	1
00ED	10 3/4 cycle[c]		–32767	32767	1	1
00EE	11 cycle[c]		–32767	32767	1	1
00EF	11 1/4 cycle[c]		–32767	32767	1	1
00F0	11 1/2 cycle[c]		–32767	32767	1	1
00F1	11 3/4 cycle[c]		–32767	32767	1	1
00F2	12 cycle[c]		–32767	32767	1	1
00F3	12 1/4 cycle[c]		–32767	32767	1	1
00F4	12 1/2 cycle[c]		–32767	32767	1	1
00F5	12 3/4 cycle[c]		–32767	32767	1	1
00F6	13 cycle[c]		–32767	32767	1	1
00F7	13 1/4 cycle[c]		–32767	32767	1	1
00F8	13 1/2 cycle[c]		–32767	32767	1	1
00F9	13 3/4 cycle[c]		–32767	32767	1	1
00FA	14 cycle[c]		–32767	32767	1	1
00FB	14 1/4 cycle[c]		–32767	32767	1	1
00FC	14 1/2 cycle[c]		–32767	32767	1	1
00FD	14 3/4 cycle[c]		–32767	32767	1	1
00FE	15 cycle[c]		–32767	32767	1	1
Event Summary Data						
00FF	Event type[a]	ASCII string				
0100		see Note 5				
0101						
0102						
Date and Time						
0103	Event time[b]	millisec	0	999	1	1
0104	[b]	ss	0	59	1	1
0105	[b]	mm	0	59	1	1
0106	[b]	hh	0	23	1	1
0107	Event date[b]	dd	1	31	1	1
0108	[b]	mm	1	12	1	1
0109	[b]	yyyy	1992	2999	1	1

Table G.18 Modbus Map (Sheet 15 of 16)

Address (Hex)	Field	Units	Range			Scale Factor
			Low	High	Step	
010A	Shots		0	4		
010B	Targets Bit 0 = 1 if any of bits 8–15 are set to 1 Bit 0 = 0 if all of bits 8–15 are set to 0 Bit 1–7 = 0 Bit 8 = Phase N 51/50 Bit 9 = Phase C 51/50 Bit 10 = Phase B 51/50 Bit 11 = Phase A 51/50 Bit 12 = LO Bit 13 = RS Bit 14 = Inst. Bit 15 = 0					
010C	Event current phase A	Amps	0	65535	1	
010D	Event current phase B	Amps	0	65535	1	
010E	Event current phase C	Amps	0	65535	1	
010F	Event neutral current IN	Amps	0	65535	1	
0110	Event residual current IG	Amps	0	65535	1	
0111	Event neg.-seq. current IQ	Amps	0	65535	1	
0112–011F	Reserved					
Maximum Current Limit						
0120	Phase current[d]	Amps	–32767	32767	1	1
0121	Phase current[e]	Exponent	–4	4	1	1
0122	Neutral current[d]	Amps	–32767	32767	1	1
0123	Neutral current[e]	Exponent	–4	4	1	1
0124–012F	Reserved					
Communication Counter						
0130	Number of messages received[b]	–	0	65535	1	1
0131	Number of messages sent to other devices[b]	–	0	65535	1	1
0132	Invalid address[b]	–	0	65535	1	1
0133	Bad CRC[b]	–	0	65535	1	1

Table G.18 Modbus Map (Sheet 16 of 16)

Address (Hex)	Field	Units	Range			Scale Factor
			Low	High	Step	
0134	UART error[b]	–	0	65535	1	1
0135	Illegal function code/Op code[b]	–	0	65535	1	1
0136	Illegal register[b]	–	0	65535	1	1
0137	Illegal write[b]	–	0	65535	1	1
0138	Bad packet format[b]	–	0	65535	1	1
0139	Bad packet length[b]	–	0	65535	1	1
013B	Reserved					
	Reserved					
	Reserved					
1FFB	Device tag #[b]	15043	–	–	–	–
1FFC	Feature set ID[b]	1				
1FFD	Reserved					
	Reserved					
FFFF	Reserved					

[a] Two 8-bit ASCII characters per register.
[b] 16-bit unsigned value.
[c] 16-bit signed value.
[d] Two 16-bit registers needed to accomplish the Signed Integer Dynamic Fixed Point data format. Final value read = $(R1 \cdot 10^{R2})$.
[e] R1 is the content of register 0110h (0112h). R2, which is stored in 0111h (0113h), determines the decimal point position for the final value.

NOTE 1: Reserved addresses return 8000h.

NOTE 2: Registers (RW) are read-write registers. Registers (W) are write-only registers. All other registers are read-only.

NOTE 3: Event Types

TRIG	ER2
TRIP	PULSE
ERI	

NOTE 4: The Modbus map (*Table G.18*) provides a feature that allows you to download complete event data via Modbus. See *Table G.17* for data descriptions.

NOTE 5: Please refer to *Table G.16* for a list of Command Codes.

General Comments

All registers are 16 bits with bit locations ranging from 0 to 15.

Relay words and targets are mapped in bit positions 8–15 in the register. Contact status is mapped in bit positions 7–15 in the register. The 0 bit position of this register is set equal to 1 if any of the 1–15 positions are set to 1.

This page intentionally left blank

SEL-551C Command Summary

Access Level 0 Command	The only thing that can be done at Access level 0 is to go to Access Level 1. The screen prompt is: =
ACC	Enters Access Level 1. If the main board password jumper is not in place, the relay prompts for the entry of the Access Level 1 password in order to enter Access Level 1.

Access Level 1 Command	The Access Level 1 commands primarily allow the user to look at information (e.g., settings, metering, etc.), not change it. The screen prompt is: =>
2AC	Enters Access Level 2. If the main board password jumper is not in place, the relay prompts for the entry of the Access Level 2 password in order to enter Access Level 2.
DAT	Shows date presently in the relay.
DAT *m/d/y*	Enters date in this manner if Date Format setting DATE_F = MDY.
DAT *y/m/d*	Enters date in this manner if Date Format setting DATE_F = YMD.
EVE *n*	Shows standard 15-cycle event report number *n*, with 1/4 cycle resolution (*n* = 1–20, with *n* = 1 most recent).
EVE C *n*	Causes the relay to add digital data at the end of the Event *n* report.
EVE L *n*	Shows standard 15-cycle event report number n, with 1/8 cycle resolution (*n* = 1–20, with *n* = 1 most recent).
EVE L C *n*	Causes the relay to add digital data at the end of Event L *n* report.
EVE R *n*	Causes the relay to display an unfiltered event report with 1/16-cycle resolution.
EVE R C *n*	Causes the relay to add digital data at the end of the Event R *n* report.
HIS *n*	Shows brief summary of the n latest standard 15-cycle event reports.
HIS C	Clears the brief summary and corresponding standard 15-cycle event reports.
IRI	Forces synchronization attempt of internal relay clock to IRIG-B time-code input.
MET *k*	Displays metering data, both magnitude and phase angle. Phase angles are referenced to phase input IA. Enter number *k* to scroll metering k times on screen.
MET D	Displays demand and peak demand data. Select **MET RD** or **MET RP** to reset.
QUI	Quit. Returns to Access Level 0. Returns front-panel LEDs to the default targets (corresponding to command **TAR 0**).
SER *n*	Show the latest *n* rows in the Sequential Events Recorder (SER) event report.
SER *m n*	Show rows *m* through *n* in the Sequential Events Recorder (SER) event report.
SER *d1*	Show rows in the Sequential Events Recorder (SER) event report from date *d1*.
SER *d1 d2*	Show rows in the Sequential Events Recorder (SER) event report from date *d1* to *d2*. Entry of dates is dependent on the Date Format setting DATE_F (= MDY or YMD).
SER C	Clears the Sequential Events Recorder (SER) event report.
SHO	Show relay settings (overcurrent, reclosing, timers, etc.).
SHO L	Show SELOGIC® control equation settings.
SHO P *m*	Show port settings; *m* = port # (1 = rear, 2 or F = front)
SHO R	Show Sequential Events Recorder (SER) settings.
SHO T	Show text label settings.
STA	Show relay self-test status. **STA C** resets self-test warnings/failures.
TAR R	Return front-panel LED targets to regular operation and reset the FAULT TYPE front-panel targets.
TAR 0 *k*	Return front-panel LED targets to regular operation. Enter number *k* to scroll front-panel LED status *k* times on screen.

Access Level 1 Command	The Access Level 1 commands primarily allow the user to look at information (e.g., settings, metering, etc.), not change it. The screen prompt is: =>
TAR *n k*	Display Relay Word row *n* status (*n* = 1–15) on remapped front-panel LED targets. Enter number *k* to scroll Relay Word row *n* status *k* times on screen.
TAR *n* X	Relay Word row *n* status (*n* = 1–15) is sent to the serial port/computer screen, but the front-panel LED targets remain unchanged.
TIM	Show or set time (24-hour time). Show time presently in the relay by entering just **TIM**. Example time 22:47:36 is entered with command **TIM 22:47:36**.
TRI	Trigger an event report.

Access Level 2 Commands	The Access Level 2 commands primarily allow the user to change settings or operate relay parameters and output contacts. All Access Level 1 commands can also be executed from Access Level 2. The screen prompt is: =>>
CLO	Assert the CLOSE Relay Word bit. If CLOSE is assigned to an output contact (e.g., OUT2 = CLOSE), then the output contact will assert if command **CLO** is executed and the circuit breaker is open.
CON *n*	Control Relay Word bit RB*n* (Remote Bit *n*; *n* = 1–8). Execute **CON *n*** and the relay responds: `CONTROL RBn`. Then reply with one of the following: **SRB *n*** set Remote Bit *n* (assert RB*n*) **CRB *n*** clear Remote Bit *n* (deassert RB*n*) **PRB *n*** pulse Remote Bit *n* [assert RB*n* for one processing interval (1/8 cycle)].
OPE	Assert the TRIP Relay Word bit. If TRIP is assigned to an output contact (e.g., OUT1 = TRIP), then the output contact will assert if command **OPE** is executed.
PAS 1	Change Access Level 1 password.
PAS 2	Change Access Level 2 password.
PUL *n k*	Pulse output contact *n* (*n* = `OUT1`, `OUT2`, and `OUT3`). Enter number *k* to pulse for *k* seconds [*k* = 1 to 30 (seconds)], otherwise pulse time is 1 second.
SET *n*	Change relay settings (overcurrent, reclosing, timers, etc.).
SET L *n*	Change SELOGIC control equations settings.
SET P *m n*	Change port settings; *m* = port # (1 = rear, 2 or F = front)
SET R *n*	Change Sequential Events Recorder (SER) settings.
SET T *n*	Change text label settings. For the **SET** commands, jump to parameter *n* to begin setting editing. If parameter *n* is not entered, setting editing starts at the first setting.
VER	Show relay configuration and firmware version.

SEL-551C Command Summary

Access Level 0 Command	The only thing that can be done at Access level 0 is to go to Access Level 1. The screen prompt is: =
ACC	Enters Access Level 1. If the main board password jumper is not in place, the relay prompts for the entry of the Access Level 1 password in order to enter Access Level 1.

Access Level 1 Command	The Access Level 1 commands primarily allow the user to look at information (e.g., settings, metering, etc.), not change it. The screen prompt is: =>
2AC	Enters Access Level 2. If the main board password jumper is not in place, the relay prompts for the entry of the Access Level 2 password in order to enter Access Level 2.
DAT	Shows date presently in the relay.
DAT *m/d/y*	Enters date in this manner if Date Format setting DATE_F = MDY.
DAT *y/m/d*	Enters date in this manner if Date Format setting DATE_F = YMD.
EVE *n*	Shows standard 15-cycle event report number *n*, with 1/4 cycle resolution (*n* = 1–20, with *n* = 1 most recent).
EVE C *n*	Causes the relay to add digital data at the end of the Event *n* report.
EVE L *n*	Shows standard 15-cycle event report number n, with 1/8 cycle resolution (*n* = 1–20, with *n* = 1 most recent).
EVE L C *n*	Causes the relay to add digital data at the end of Event L *n* report.
EVE R *n*	Causes the relay to display an unfiltered event report with 1/16-cycle resolution.
EVE R C *n*	Causes the relay to add digital data at the end of the Event R *n* report.
HIS *n*	Shows brief summary of the n latest standard 15-cycle event reports.
HIS C	Clears the brief summary and corresponding standard 15-cycle event reports.
IRI	Forces synchronization attempt of internal relay clock to IRIG-B time-code input.
MET *k*	Displays metering data, both magnitude and phase angle. Phase angles are referenced to phase input IA. Enter number *k* to scroll metering k times on screen.
MET D	Displays demand and peak demand data. Select **MET RD** or **MET RP** to reset.
QUI	Quit. Returns to Access Level 0. Returns front-panel LEDs to the default targets (corresponding to command **TAR 0**).
SER *n*	Show the latest *n* rows in the Sequential Events Recorder (SER) event report.
SER *m n*	Show rows *m* through *n* in the Sequential Events Recorder (SER) event report.
SER *d1*	Show rows in the Sequential Events Recorder (SER) event report from date *d1*.
SER *d1 d2*	Show rows in the Sequential Events Recorder (SER) event report from date *d1* to *d2*. Entry of dates is dependent on the Date Format setting DATE_F (= MDY or YMD).
SER C	Clears the Sequential Events Recorder (SER) event report.
SHO	Show relay settings (overcurrent, reclosing, timers, etc.).
SHO L	Show SELOGIC® control equation settings.
SHO P *m*	Show port settings; *m* = port # (1 = rear, 2 or F = front)
SHO R	Show Sequential Events Recorder (SER) settings.
SHO T	Show text label settings.
STA	Show relay self-test status. **STA C** resets self-test warnings/failures.
TAR R	Return front-panel LED targets to regular operation and reset the FAULT TYPE front-panel targets.
TAR 0 *k*	Return front-panel LED targets to regular operation. Enter number *k* to scroll front-panel LED status *k* times on screen.

Access Level 1 Command	The Access Level 1 commands primarily allow the user to look at information (e.g., settings, metering, etc.), not change it. The screen prompt is: =>
TAR *n k*	Display Relay Word row *n* status (*n* = 1–15) on remapped front-panel LED targets. Enter number *k* to scroll Relay Word row *n* status *k* times on screen.
TAR *n* X	Relay Word row *n* status (*n* = 1–15) is sent to the serial port/computer screen, but the front-panel LED targets remain unchanged.
TIM	Show or set time (24-hour time). Show time presently in the relay by entering just **TIM**. Example time 22:47:36 is entered with command **TIM 22:47:36**.
TRI	Trigger an event report.

Access Level 2 Commands	The Access Level 2 commands primarily allow the user to change settings or operate relay parameters and output contacts. All Access Level 1 commands can also be executed from Access Level 2. The screen prompt is: =>>
CLO	Assert the CLOSE Relay Word bit. If CLOSE is assigned to an output contact (e.g., OUT2 = CLOSE), then the output contact will assert if command **CLO** is executed and the circuit breaker is open.
CON *n*	Control Relay Word bit RB*n* (Remote Bit *n*; *n* = 1–8). Execute **CON *n*** and the relay responds: `CONTROL RBn`. Then reply with one of the following: **SRB *n*** set Remote Bit *n* (assert RB*n*) **CRB *n*** clear Remote Bit *n* (deassert RB*n*) **PRB *n*** pulse Remote Bit *n* [assert RB*n* for one processing interval (1/8 cycle)].
OPE	Assert the TRIP Relay Word bit. If TRIP is assigned to an output contact (e.g., OUT1 = TRIP), then the output contact will assert if command **OPE** is executed.
PAS 1	Change Access Level 1 password.
PAS 2	Change Access Level 2 password.
PUL *n k*	Pulse output contact *n* (*n* = `OUT1`, `OUT2`, and `OUT3`). Enter number *k* to pulse for *k* seconds [*k* = 1 to 30 (seconds)], otherwise pulse time is 1 second.
SET *n*	Change relay settings (overcurrent, reclosing, timers, etc.).
SET L *n*	Change SELOGIC control equations settings.
SET P *m n*	Change port settings; *m* = port # (1 = rear, 2 or F = front)
SET R *n*	Change Sequential Events Recorder (SER) settings.
SET T *n*	Change text label settings. For the **SET** commands, jump to parameter *n* to begin setting editing. If parameter *n* is not entered, setting editing starts at the first setting.
VER	Show relay configuration and firmware version.