Merlin Gerin
Modicon
Square D
Telemecanique

Schneider Electric

Modicon
Quantum Automation Series 140 CPU 534 14A
Instruction Sheet

31002658 02 Version 3.1

Important Information

What is an "A" Version CPU

The obsolescence of parts has necessitated a redesign of the Quantum Automation Series 140 CPU 434 12 controller. This redesigned version of the controller will be designated with "A" at the end of the part number (i.e., 140 CPU 534 14A). This version is functionally identical to the standard version (non-"A"), however, the following should be considered.

- If you are using the module in a hot standby topology, then you **must** use either two non-"A" models or two "A" models.
- The "A" version has a unique flash executive.

Note: The "A" and non-"A" flash executives are **not** interchangeable.

- Schneider Automation software (Concept, ProWORX, and Modsoft) supports the "A" version. Any existing or new 140 CPU 534 14 program configuration will load into a 140 CPU 534 14A without any modifications.

For More Information

For complete information concerning this and other modules, please obtain a copy of the *Quantum Automation Series Hardware Reference Guide* (840 USE 100 00) from your distributor or local sales office.

Front Panel Topology

Overview

There are two switches (a three-position slide switch and a three-position key switch) and one connector (Modbus RS-232) located on the front of the CPU. These switches are described in the following sections.

Front Panel Slide Switch

The slide switch is used to select the comm parameter settings for the Modbus (RS-232) ports. Three options are available.

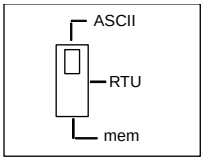

- Setting the slide switch to the top position assigns ASCII functionality to the port; the following comm parameters are set and cannot be changed.

ASCII Comm Port Parameters	
Baud	2,400
Parity	Even
Data Bits	7
Stop Bits	1
Device Address	Rear panel rotary switch setting

Continued on next page

Quantum Automation Series equipment is protected by U.S. Patent number 5,302,136, and by European Patent number 93202982.0-

Front Panel Slide Switch, continued

- Setting the slide switch to the middle position assigns remote terminal unit (RTU) functionality to the port; the following comm parameters are set and cannot be changed

RTU Comm Port Parameters	
Baud	9,600
Parity	Even
Data Bits	8
Stop Bits	1
Device Address	Rear panel rotary switch setting

- Setting the slide switch to the bottom position gives you the ability to assign comm parameters to the port in software; the following parameters are valid.

Valid Comm Port Parameters	
Baud	50 ... 19200
Data Bits	7/8
Stop Bits	1/2
Parity	Enable/Disable Odd/Even
Device Address	1 ... 247

Continued on next page

Front Panel Key Switch

The key switch is used to protect memory from programming changes while the controller is in operation.

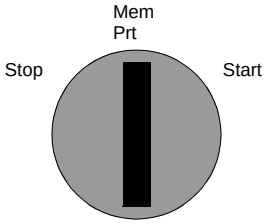

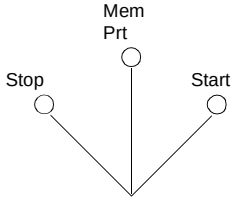

Note: The key switch positions shown next to the switch (above) are for reference only and are marked on the module as indicated on the right.

Key Switch Position	Controller Status	Memory Protected from Programmer Changes	Will Accept Programmer Stop or Start	Key Switch Transition
Stop	Controller is stopped and disables Programmer changes.	Y	N	**From Start or Memory Protect**: Stops controller, if running, and disables Programmer changes
Memory Protect	Controller may be either stopped or running and Programmer changes are disabled	Y	N	**From Stop or Start:** Prevents Programmer changes, controller run status is not changes
Start	Controller may be either stopped or running, Programmer may make changes and start/stop the controller	N	Y	**From Stop:** Enables Programmer changes, starts controller. From Memory Protect: Enables programmer changes, starts controller if stopped

Continued on next page

Quantum Automation Series equipment is protected by U.S. Patent number 5,302,136, and by European Patent number 93202982.0-

Front Panel Modbus Connector

The Quantum 140 CPU 534 14A is equipped with two nine-pin RS-232C connectors that support Modicon's proprietary Modbus communication protocol. The following is the Modbus port pinout connections for nine-pin and 25-pin connections.

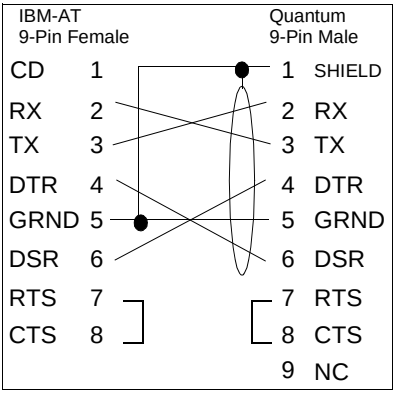

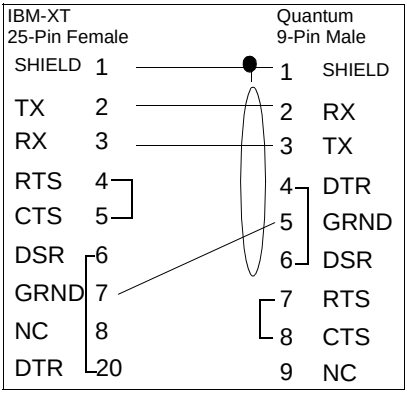

TX: Transmitted Data	**DTR:** Data Terminal Ready
RX: Received Data	**CLS:** Clear to Send
RTS: Request to Send	**N/C:** No Connections
DSR: Data Set Ready	**CD:** Carrier Detect

Note: Although the Modbus ports electrically support existing Modbus cables, it is recommended that a Modbus programming cable (Part # 990 NAA 263 20) be used. This cable has been designed to fit under the door of a Quantum CPU or NOM module.

Rear Panel Topology

Overview

Two rotary switches (refer to the illustration and table below) are located on the rear panel of the CPU. They are used for setting Modbus Plus node and Modbus port addresses.

Note: The highest address that may be set with these switches is 64.

SW1 (the top switch) sets the upper digit (tens) of the address; SW2 (the bottom switch) sets the lower digit (ones) of the address. The illustration below shows the correct setting for an example address of 11.

SW1 and SW2 Address Settings		
Node Address	**SW1**	**SW2**
1 ... 9	0	1 ... 9
10 ... 19	1	0 ... 9
20 ... 29	2	0 ... 9
30 ... 39	3	0 ... 9
40 ... 49	4	0 ... 9
50 ... 59	5	0 ... 9
60 ... 64	6	0 ... 4

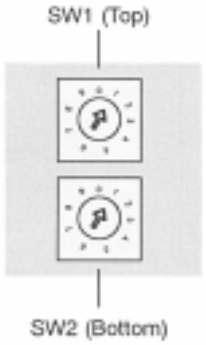

Note: If 0" or an address greater than 64 is selected, the Modbus + LED will be “ON" steady, to indicate the selection of an invalid address.

Quantum Automation Series equipment is protected by U.S. Patent number 5,302,136, and by European Patent number 93202982.0-

Option Module Interface Support

Overview

The 140 CPU 534 14A supports up to six network modules (i.e., Modbus Plus, Ethernet, and Multi-Axis Motion option modules) using the option module interface technique. However, only two Modbus Plus modules can have full functionality, including Quantum DIO support.

Quantum Communications and Network Modules

Model Number	Description	Module Interface Technique	Loadable Required	Backplane Support			Bus Power mA
				Local	RIO	DIO	
140CRP81100	Profibus	Direct CPU Driver	N	Y	N	N	1200
140CRP93100	Remote I/O Head Interface, single cable	Direct CPU Driver	N	Y	N	N	780
140CRP93200	Remote I/O Head Interface, dual cable	Direct CPU Driver	N	Y	N	N	780
140CHS21000	Hot Standby Processor Kit	Direct CPU Driver	Y	Y	N	N	700
140NOA61110	Interbus Master	Direct CPU Driver	Y	Y	N	N	700
140NOM21100	Modbus Plus Options, single cable	Option Module	N	Y	N	N	780
140NOM21200	Modbus Plus Option, dual cable	Option Module	N	Y	N	N	780
140NOM25200	Modbus Plus Option, single channel fiber	Option Module	N	Y	N	N	900
140NOE21100	Ethernet TCP/IP Twisted Pair	Option Module	N	Y	N	N	1000
140NOE25100	Ethernet TCP/IP Fiber Optic	Option Module	N	Y	N	N	1000
140NOE31100	Ethernet SY/MAX Twisted Pair	Option Module	N	Y	N	N	1000

Continued on next page

Quantum Communications and Network Modules, continued

Model Number	Description	Module Interface Technique	Loadable Required	Backplane Support			Bus Power mA
				Local	RIO	DIO	
140NOE35100	Ethernet SY/MAX Fiber Optic	Option Module	N	Y	N	N	1000
140NOE5100[1]	Ethernet MMS Twisted Pair	Option Module	N	Y	N	N	1000
140NOE55100[1]	Ethernet MMS Fiber Optic	Option Module	N	Y	N	N	1000
140MMS42500	Multi-Axis Motion Controller w/ SERCOS	Option Module	N	Y	N	N	2500
140NOL91100	LonWorks Interface, twisted pair FTT10	I/O Map (16/16)	Y	Y	Y	N	950
140NOL91110	LonWorks Interface, twisted pair TPT/XF-78	I/O Map (16/16)	Y	Y	Y	N	950
140NOL91120	LonWorks Interface, twisted pair TPT/XF-1250	I/O Map (16/16)	Y	Y	Y	N	950
1. The software for this module is a ModConnect product.							

Continued on next page

Quantum Automation Series equipment is protected by U.S. Patent number 5,302,136, and by European Patent number 93202982.0-

Quantum Modbus and Modbus Plus Services

This table describes the types of services provided by Modbus and Modbus Plus.

Type	Service Description	Native CPU Ports		NOM 1-2 Ports		NOM 3-6 Ports[1]	
		Modbus	Modbus Plus	Modbus	Modbus Plus	Modbus	Modbus Plus
Modbus Services	Default Modbus Port Parameters	Y	-	Y	-	Y	-
	Configurable Modbus Port Parameters	Y	-	Y	-	Y[5]	-
	Modbus to Modbus Plus Bridging	Y[2]	-	Y[3]	-	Y[3]	-
	Local CPU Programming	Y[4]	-	Y[4]	-	N	-
	Remote CPU Programming over Modbus Plus	Y[4]	-	Y[4]	-	Y[2]	-
	Modbus access to local CPU	Y	-	Y	-	N	-
	Modbus access to remote CPU over Modbus Plus	Y	-	Y	-	Y	-
	Modbus Network Slave Support	Y	-	N	-	N	-
	Modbus Master support with XMIT Loadable	Y	-	N	-	N	-
	Executive Firmware Loading Support	Y	-	N	-	N	-

1. Only supported on the 140CPU42402, 140CPU43412A and 140CPU53414A Quantum Controllers.
2. The native CPU Modbus port can be disabled from bridge mode operation with the native Modbus Plus Port.
3. Modbus ports on NOMs are always in bridge mode with their associated Modbus Plus port.
4. Only one programmer connection can be logged in at a time to any CPU, and only one program monitor can be attached at a time to any CPU.
5. Modbus port parameters on NOMs 3-6 are defined by Modbus Port 3 in Concept and Modsoft when the comm parameter selector switch is in mem.

Quantum Modbus and Modbus Plus Services, continued

Type	Service Description	Native CPU Ports		NOM 1-2 Ports		NOM 3-6 Ports[1]	
		Modbus	Modbus Plus	Modbus	Modbus Plus	Modbus	Modbus Plus
Modbus Plus Services	MSTR read/write register messaging[2]	-	Y	-	Y	-	Y
	MSTR read/write Global Data messaging	-	Y	-	Y	-	Y
	MSTR get/clear local/remote statistics	-	Y	-	Y	-	Y
	Config Extension Global Data Support	-	Y	-	Y	-	N
	Config Extension Peer Cop Support	-	Y	-	Y	-	N
	Distributed I/O Support	-	Y	-	Y	-	N
	CPU Programming	-	Y[3]	-	Y[3]	-	Y[3]
	Executive Firmware Loading Support	-	Y	-	N	-	Y

1. Only supported on the 140CPU42402, 140CPU43412A and 140CPU53414A Quantum Controllers.
2. Up to 4 MSTR read/write register instructions can be serviced per CPU scan per Modbus Plus port.
3. Only one programmer connection can be logged in at a time to any CPU, and only one program monitor can be attached at a time to any CPU.

Quantum Automation Series equipment is protected by U.S. Patent number 5,302,136, and by European Patent number 93202982.0-

140 CPU 534 14A Module Specifications

140 CPU 534 14A Specifications

The following table provides you with the specifications for the 140 CPU 534 14A module.

User Logic/Reference Capacity	User Logic	Discrete	Register	Extended Register	IEC Application Memory
	64 k words * 57,766 4XX registers Only if 0XXX = 16 and 1XXX =16 and 3XXX =16	64 k	57 k *	96 k	896 k
Reference Capacity					
Discrete	64 k - any mix				
Local I/O (Main Backplane)					
Maximum I/O Words	64 In and 64 Out *				
Maximum Number of I/O Racks	1				
Remote I/O					
Maximum I/O Words per Drop	64 In and 64 Out *				
Maximum Number of Remote Drops	31				
Distributed I/O					
Maximum Number of Networks per System	3 **				
Maximum Words per Network (For every DIO drop, there is a minimum of two words input of overhead.)	500 In and 500 Out				
Maximum Words per Node	30 In and 32 Out				

* This information can be a mix of Discrete or Register I/O. for each word of register I/O configured, one word of I/O words must be subtracted from the total available. The same holds true for each block of 8 bits or 16 bits of Discrete I/O configured-one word of Register I/O must be subtracted from the total available.

** Requires the use of two 140 NOM 21x 00 Option Modules.

140 CPU 534 14A Specifications, continued

Maximum Number of Option Module Interfaces	6
Watchdog Timer	250 ms (S/W adjustable)
Logic Solve Time	0.1 ms / k to 0.5 ms / k
Battery	3 V Lithium
Service Life	1200 mAh
Shelf Life	10 years with 0.5% loss of capacity per year
Battery Load Current @ Power-off	
Typical	7 microamps
Maximum	210 microamps
Communication	
Modbus (RS-232)	2 serial ports (9-pin D-shell)
Modbus Plus (RS-485)	1 network port (9-pin D-shell)
Programming Software Compatability	Modsoft Ver. 2.6 Concept Ver. 2.1 with B2.1 patch exec Concept Ver 2.2 with SRW ProWORX NxT Ver 2.0 ProWORX Plus Ver 1.05
General	
Diagnostics	**Power Up**: RAM, RAM Address, Executive Checksum, User Logic Check, Processor **Runtime**: RAM, RAM Address, Executive Checksum, User Logic Check
Bus Current Required	1.25 A
TOD Clock	+/- 8.0 seconds/day 0 ... 60° C
Operating Temperature	0 ... 50° C
Maximum Number of NOM, NOE, and MMS Modules (any combination)	6

Quantum Automation Series equipment is protected by U.S. Patent number 5,302,136, and by European Patent number 93202982.0-