Instruction Bulletin
6055-30
October 1996

MASTERCLAD™
Metal-Clad Indoor Switchgear

4.76—15.0 kV
Series 5
With Type VR Vacuum Circuit Breakers

Class 6055

SQUARE D

SQUARE D and ⧈ are Registered Trademarks of Square D Company.
MASTERCLAD is a Trademark of Square D Company.

© 1996 Square D Company, all rights reserved. This bulletin may not be copied in whole or in part, or transferred to any other media, without the written permission of Square D Company.

Electrical equipment should be serviced only by qualified electrical maintenance personnel. No responsibility is assumed by Square D for any consequences arising out of use of this material.

CONTENTS

1. INTRODUCTION 1

2. SAFETY PRECAUTIONS 4

3. RECEIVING, HANDLING, AND STORAGE 5
- Receiving 5
- Handling 5
- Storage 6

4. DESCRIPTION 7
- Front Section 9
- Circuit Breaker Cell 9
  - Circuit Breaker Positioning Rails 9
  - Racking Mechanism 9
  - Circuit Breaker Interlocks 9
  - Compartment Rating Interlocks 11
  - Ground And Test Unit Dummy Circuit Breaker Interlock 11
  - Barrier 12
  - Control Power Receptacle 12
  - Disconnect Position Latch 12
  - Shutters 13
  - Circuit Breaker Position Indicator 13
  - Primary High Voltage Contacts 14
  - Current Transformers 14
  - Cell Interlock 14
  - Ground Contact Bar 14
  - Mechanism Operated Contacts (MOC)—Optional 15
  - Truck Operated Contacts (TOC)—Optional 15
- Voltage Transformer, Control Power Transformer and Fuse Drawout Units 16
  - Drawout Control Power Transformer 16
  - Drawout Voltage Transformer 18
  - Drawout Fuse 18
- Main Bus Compartment 20
- Cable Compartments 20
- Surge Arresters 21

5. OPERATION 22
- Circuit Breaker-Circuit Breaker Cell Interlock System 22
- Circuit Breaker Operation 22
  - Racking Mechanism 22
  - Control Power Plug 23
  - Disconnect Position Latch 23
  - Manual Spring Charging Mechanism 23
  - Manual Close And Open Pushbuttons 23

6. INSTALLATION 24
- Site Preparation 24
- Foundation 25
- Switchgear Installation 25
  - Shipping Section Installation 25
  - Main Bus Installation 27
  - Ground Bus Connection 30
  - Control Wiring Connections 30
  - Circuit Breaker Installation 30
  - VT, CPT, and Fuse Drawout Installation 31
- High-Potential Testing 31
- Phasing 31
- Cable Connections 31

7. START-UP 33

CONTENTS (cont.)

8. INSPECTION AND MAINTENANCE 35
Main Bus Compartment 35
Cable Compartment 35
Circuit Breaker Compartment 35
Circuit Breakers 36
VT, CPT and Fuse Drawout Units 36
Re-energizing 37

9. ACCESSORIES 38
Circuit Breaker Lift Truck 38
Test Cabinet—Optional 39
Ground And Test Device—Optional 39

10. OUTLINE 40

11. INSTALLATION AND MAINTENANCE LOG 41

ILLUSTRATIONS

Figure

1. Typical MASTERCLAD metal-clad switchgear assembly 2
2. Type VR circuit breaker, front view (top) and rear view (bottom) 3
3. Upper and lower circuit breaker cells with circuit breakers removed 7
4. Switchgear, side view with panels removed 8
5. Circuit breaker floor plate, racking device, and interlocks 10
6. Circuit breaker cell without circuit breaker 12
7. Circuit breaker release handle 12
8. Circuit breaker cell with circuit breaker and barrier removed 13
9. Racking port and cell position indicator 13
10. Racking handle on the racking shaft 13
11. Circuit breaker cell with circuit breaker and barrier removed—shutter forced open 14
12. Mechanism operated contacts (MOC) 15
13. Truck operated contacts (TOC) 15
14. Drawout units in connected position 16
15. Control power transformer—secondary circuit breaker interlock 17
16. Drawout control power transformer 17
17. Drawout voltage transformer 18
18. Drawout primary fuses for stationary control power transformer 19
19. Drawout primary fuses interlock with secondary circuit breaker 19
20. Secondary circuit breaker and interlock for drawout primary fuses 19
21. Two bay assembly rear view 21
22. Switchgear mounting floor channels 25
23. Floor plan 26
24. Main bus assembly 28
25. Main bus connections—side view 28
26. Main bus connections—top view 28
27. Main bus pass-through, porcelain—optional 29
28. Stand-off bus support 29
29. High voltage cable lug insulation 32
30. Circuit breaker lift truck 38
31. Wall-mounted test cabinet—optional 39
32. MASTERCLAD indoor switchgear outline 40

TABLES

1. Switchgear and Component Weights 24
2. Bolt Torque 30
3. One Minute High-Potential Test 31

SECTION 1—INTRODUCTION

Two-high 4.76–15.0 kV drawout MASTERCLAD™ metal-clad switchgear manufactured by Square D provides medium voltage power distribution. It is designed for use with the Type VR drawout circuit breaker. The Type VR circuit breaker employs state-of-the-art vacuum technology. A typical MASTERCLAD metal-clad switchgear assembly is shown in figure 1, page 2. Figure 2, page 3, illustrates the Type VR circuit breaker. Refer to instruction bulletin 6055-31 for complete information on the Type VR circuit breaker.

The switchgear assembly consists of individually-grounded, compartmentalized steel structures. Each compartment has doors, barriers, and removable access panels to isolate the separate working functions. All of the circuit breakers, instrument and control power transformers, relays, meters, and other components are factory-assembled, wired, and tested as an assembly. The user normally makes only the external control, ground, and power connections at the terminals provided, and reconnects the wiring and busbars at the shipping breaks.

Each assembly is custom-designed to specifications. Standard structures and bus configurations are arranged according to customer specifications. The structures are then combined with the circuit breaker and other components necessary for the required protective scheme, metering, and number of feeders.

Complete customer drawings are furnished for each MASTERCLAD metal-clad switchgear assembly. The drawings include floor plans and elevations, one-line diagrams, control schematics, and wiring diagrams.

© 1996 Square D All Rights Reserved

Figure 1: Typical MASTERCLAD metal-clad switchgear assembly

© 1996 Square D All Rights Reserved

Figure 2: Type VR circuit breaker, front view (top) and rear view (bottom)

© 1996 Square D All Rights Reserved

SECTION 2—SAFETY PRECAUTIONS

⚠ DANGER

HAZARD OF ELECTRIC SHOCK, BURN OR EXPLOSION.

- All personnel involved in handling, site preparation, installation, testing, operation, and maintenance should be thoroughly familiar with the information in this instruction bulletin and customer drawings provided before working on this equipment.
- Never make interlocks inoperative or operate the equipment with any safety barriers removed.
- Always assume that all high-voltage parts are energized until it is certain they are de-energized.
- Use only test equipment rated for the service intended.
- Check interconnection diagrams and make sure there are no backfeed potential sources.
- Never disconnect the main trip source of energized equipment.
- Do not open a circuit breaker door unless the circuit breaker is tripped.
- Move circuit breakers to the disconnected position before removing rear access panels.
- Use out-of-service tags and padlocks when working on equipment. Leave tags in place until the work is completed and the equipment is ready to be put back into service.
- When in doubt, stop and reread the instruction manual or refer to the customer drawings before proceeding.
- The complete assembly arrangement determines if the top or bottom contacts are the line side; both can be energized when the circuit breaker is removed from the compartment.
- Disconnect all high voltage to the switchgear before accessing the horizontal bus compartment.
- Do not use liquid fire extinguishers or water on electrical fires! Before extinguishing fires within the assembly, be absolutely certain the main power source is disconnected and the main and all feeder circuit breakers are tripped.
- This instruction bulletin does not cover all possible equipment combinations nor does it cover circumstances that may arise during handling, installation, testing, operation, or maintenance. For additional information, contact the local Square D field office.

Failure to follow these instructions will result in death or serious injury.

© 1996 Square D All Rights Reserved

SECTION 3—RECEIVING, HANDLING, STORAGE

Receiving

MASTERCLAD two-high 4.76–15.0 kV metal-clad indoor switchgear is shipped on skids in protective crates or wrapping. Circuit breakers are individually skid-mounted.

NOTE: Circuit breakers are not to be stacked.

Upon receipt, inspect the equipment for damage that may have occurred in transit. Check all items against the packing list provided. Immediately notify the carrier and Square D of any damages or shortages.

Handling

The switchgear sections are normally shipped in one or two bays. Each section has four lifting lugs bolted on top. If more than two bays are shipped as one section, lifting channels or frames may be bolted on top. Put a crane hook through each of the four holes to lift and move the sections. After the group has been placed in position, remove and discard the lifting lugs. Then, screw the bolts back into place to cover the mounting holes.

If no crane is available, the sections may be unloaded and moved with a forklift. Rollers under the skids may be used on a relatively flat surface if other moving equipment is not available or space prohibits the use of other moving methods. See Section 6, “Installation,” for handling uncrated assemblies.

⚠ CAUTION

HAZARD OF EQUIPMENT DAMAGE.

- Do not remove the skids until the shipping sections are in the final location.
- Do not maneuver the switchgear directly on rollers.
- Always use the skids to prevent switchgear distortion or damage.

Failure to observe these precautions can result in equipment damage.

© 1996 Square D All Rights Reserved

Storage

If the assembly is stored prior to installation, keep it in a clean, dry, well-ventilated area with a mean temperature of approximately 70°F (21°C). Place dust covers over circuit breakers. If space heaters are furnished in the assembly, energize them from an external source. Refer to schematic and wiring diagrams for a logical connection point, and for voltage and power requirements.

If no space heaters are installed in the assembly, and the area is cold and damp, use a temporary heating source within the assembly. A minimum of 200 watts of heat per cell is recommended. Avoid greasy, smoky heaters that can deposit carbon on insulation, causing tracking and eventual insulation breakdowns.

If the space heaters are normally energized from the assembly control power transformer, open the control power transformer secondary circuit breaker, remove the primary current limiting fuses, and install an out-of-service tag before energizing the space heaters. This prevents backfeed to the main bus through the control power transformer.

⚠ DANGER

HAZARD OF PERSONAL INJURY

When energizing space heaters from a remote source, remove the primary current limiting fuses of the control power transformer.

Failure to observe this precaution can result in death or severe personal injury.

© 1996 Square D All Rights Reserved

SECTION 4—DESCRIPTION

The number of bays in a MASTERCLAD metal-clad switchgear assembly depends on customer specifications. Each bay is a separate rigid, self-contained, bolted structure fabricated of heavy gauge steel. It consists of:

- front section with secondary control devices
- circuit breaker cell, drawout voltage transformer and control power transformer, and fuse drawout section
- main bus compartment
- cable compartment

See figure 4, page 8 for a MASTERCLAD metal-clad switchgear bay with the side panels removed.

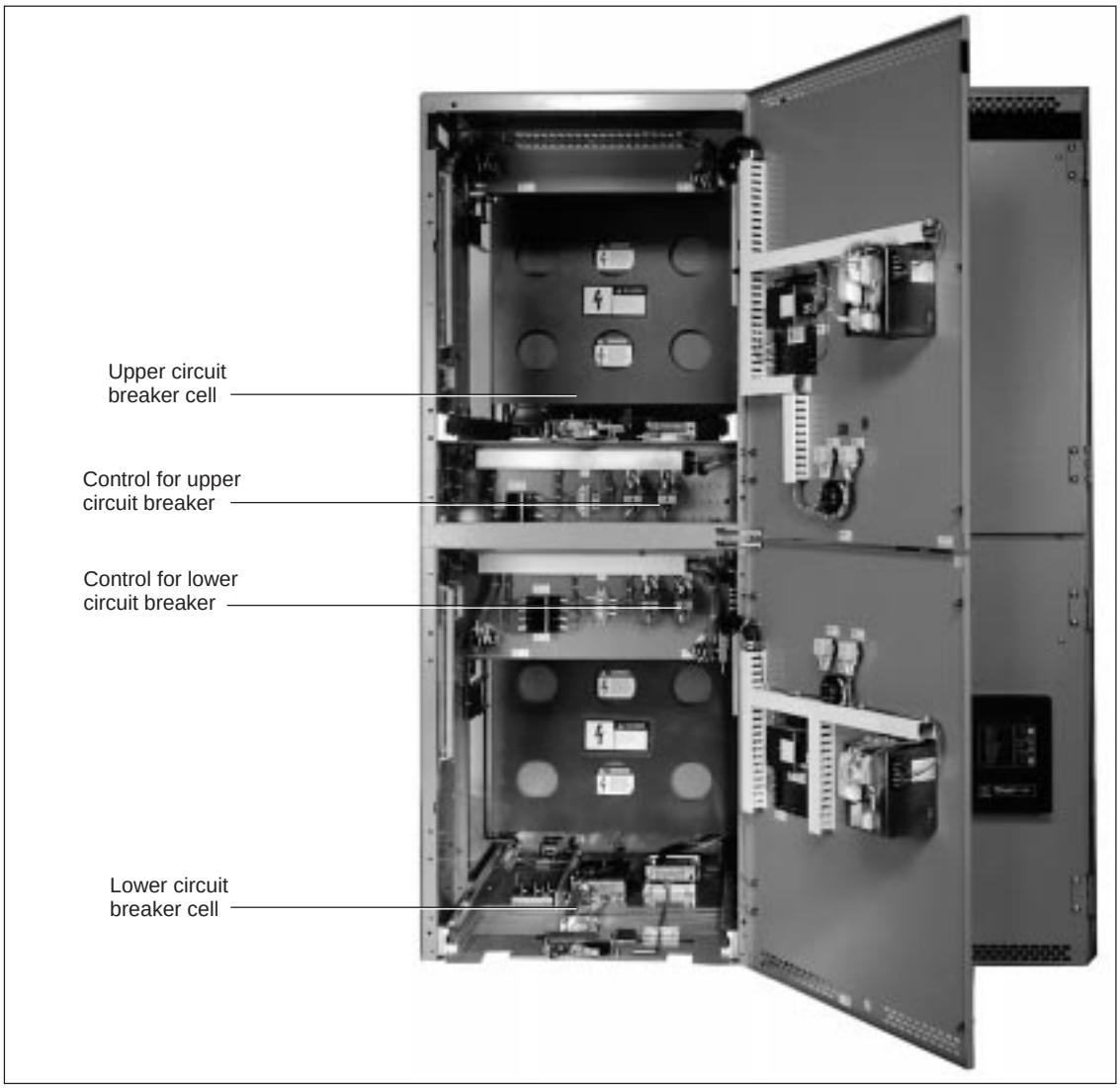

Figure 3: Upper and lower circuit breaker cells with circuit breakers removed

© 1996 Square D All Rights Reserved

Figure 4: Switchgear, side view with panels removed

© 1996 Square D All Rights Reserved

Front Section

The front section includes the front hinged doors with instruments, relays, and control switches, the terminal blocks, fuse blocks, and other required secondary control devices. It also houses the wiring space for inter-unit connection and customer cable connections.

Circuit Breaker Cell

The circuit breaker cell contains 16 separate but coordinated features, each necessary for circuit breaker operation:

- Circuit breaker positioning rails
- Racking mechanism
- Circuit breaker position indicator
- Disconnect position latch
- Circuit breaker interlocks
- Compartment rating interlocks
- Control power receptacle
- Ground and test unit and dummy breaker interlock
- Primary high voltage contacts
- Current transformers
- Shutters
- Barriers
- Cell interlock
- Ground contact bar
- Mechanism operated contacts (MOC)—optional
- Truck operated contacts (TOC)—optional

Circuit Breaker Positioning Rails—The circuit breaker is equipped with one set of wheels for rolling the circuit breaker when it is outside the switchgear. Another set of rollers guide and position the circuit breaker inside the circuit breaker cell. All four rollers are captured in rails (figure 5, item 1, page 10) which position the circuit breaker in the vertical position.

Racking Mechanism—The racking mechanism (figure 5, item 15, page 10) is located on the circuit breaker cell floor. It is operated by a removable racking crank inserted into the front of the circuit breaker cell. The front may be either open or closed. The circuit breaker engages in a gear driven racking roller (figure 5, item 13, page 10). As the roller rotates, it moves the circuit breaker from the test to the operating position.

Circuit Breaker Interlocks

- A racking block bar (figure 5, item 7, page 10) welded to the racking shaft will hit an interlock pin on the circuit breaker when it is closed. This interlock mechanism will stop a closed circuit breaker from being moved between the test / disconnected position and the connected position.
- The racking roller actuates an interlock located underneath the circuit breaker. This interlock mechanism is designed to stop a circuit breaker from being closed when it is between the test / disconnected and connected positions.

© 1996 Square D All Rights Reserved

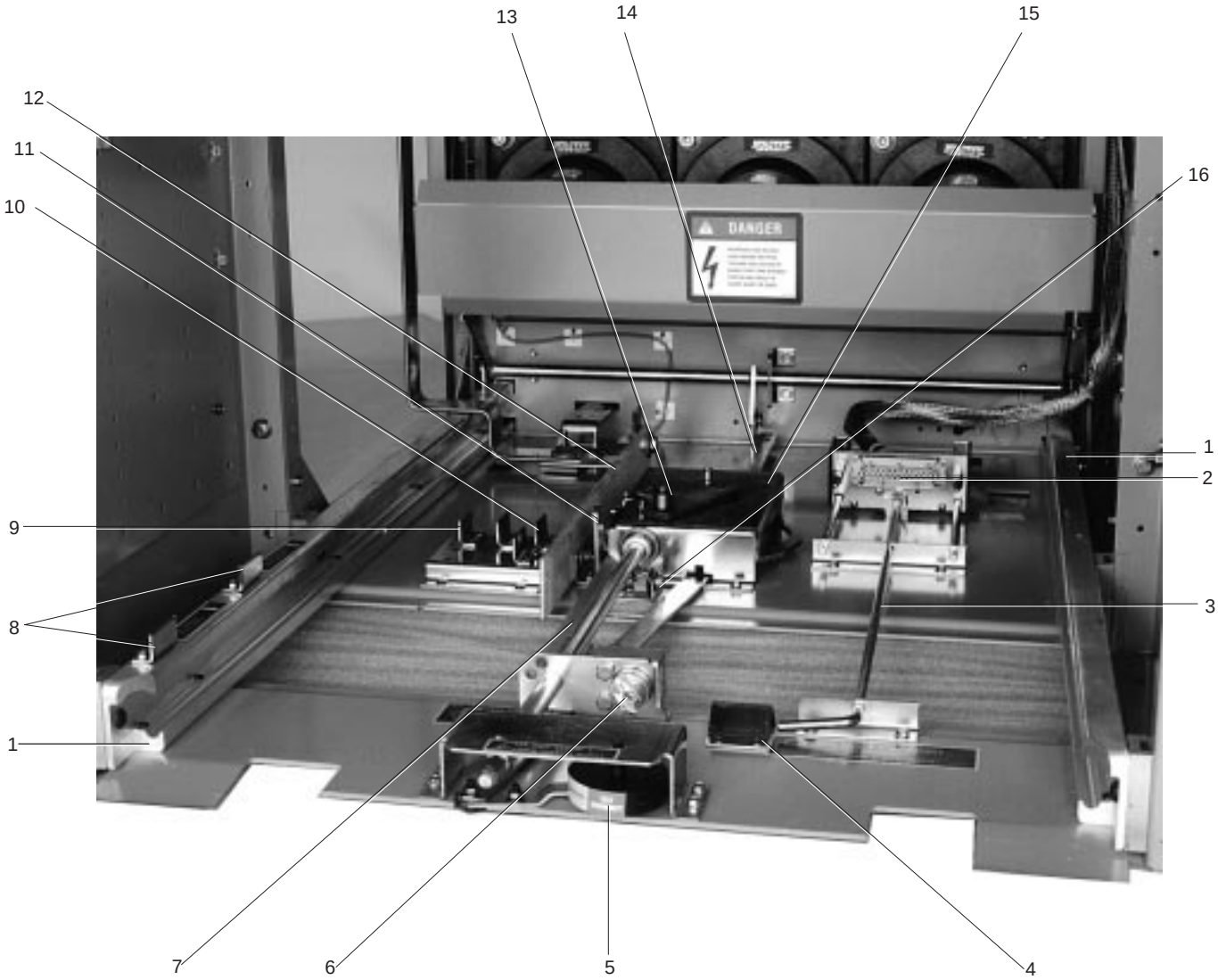

1. Circuit breaker positioning rails
2. Control power receptacle
3. Control power receptacle handle
4. Spring discharge bracket
5. Circuit breaker position indicator
6. Cell key interlock
7. Racking block bar
8. Circuit breaker position latch brackets
9. Compartment rating interlock
10. Ground and test unit and dummy breaker interlock
11. Racking block lever
12. Ground contact bar
13. Racking roller
14. Shutter actuator
15. Racking mechanism
16. Lockout lever

Figure 5: Circuit breaker floor plate, racking device, and interlocks

© 1996 Square D All Rights Reserved

- A lockout lever (figure 5, item 16) located on the drawout gear box stops the circuit breaker from being inserted into the cell when the racking roller is not in the test position.
- A racking block lever (figure 5, item 11) will not allow racking mechanism operation when the circuit breaker is not in the cell. Without the circuit breaker in the cell, the shutter cannot be opened.
- A spring discharge interlock (figure 5, item 4) will discharge the closing springs when the circuit breaker is inserted or withdrawn from the cell.

⚠ CAUTION

HAZARD OF EQUIPMENT DAMAGE

Do not test interlocks by hand. Test interlocks only by moving the circuit breaker over the cell-mounted operating cams. Do not operate interlocks in an incorrect sequence.

Failure to observe this precaution can result in equipment damage.

Compartment Rating Interlocks—These interlocks (figure 5, item 9) stop accidental insertion of circuit breakers with incorrect current, voltage, or interrupting ratings into the compartment. The stationary interference brackets are mounted on the floor of the compartment and the moving part of the interlock system is mounted on the underside of each circuit breaker.

Ground and Test Unit Dummy Circuit Breaker Interlock—Each circuit breaker cell is equipped with a ground and test unit (G & T) and dummy breaker permissive interlock (figure 5, item 10). G & Ts and dummy breakers that are not equipped with the required ground and test unit interlocks cannot be inserted into the circuit breaker cell. The permissive interlocks are located beside the position interlock on the circuit breaker cell floor. Refer to the specific G & T and dummy breaker instruction bulletins.

© 1996 Square D All Rights Reserved

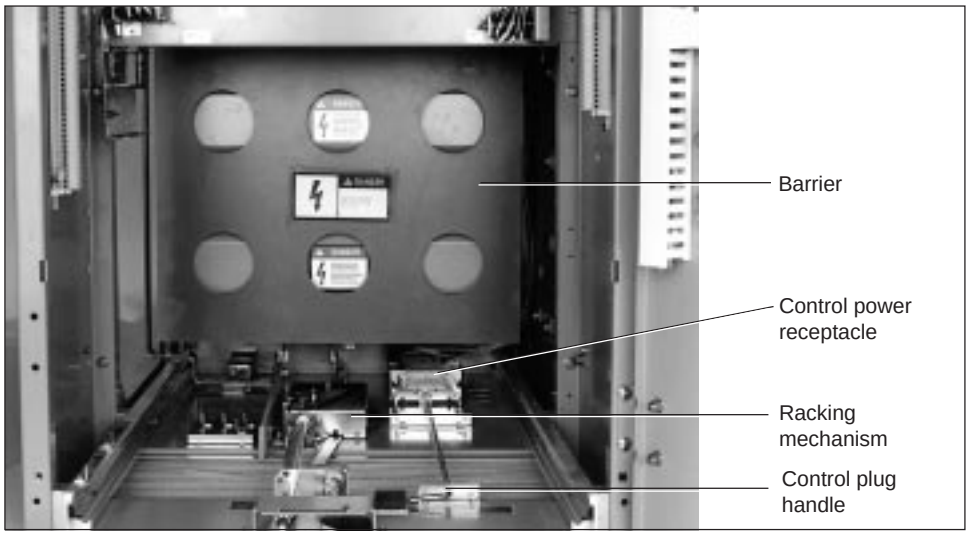

Figure 6: Circuit breaker cell without circuit breaker

Barrier—A barrier (figure 6) in front of the shutter and bell assembly and CTs is designed to stop incidental contact with live main contacts.

Control Power Receptacle—The circuit breaker control power receptacle (figure 5, item 2, page 10) is located on the lower right floor of the compartment. The molded insulating receptacle contains 24 contacts and two tapered guidepins. The control power can be connected in the test position by rotating the control plug handle and pulling it forward. Refer to figure 5, item 3, page 10 and figure 6.

Disconnect Position Latch—A spring loaded latch on the circuit breaker engages behind the circuit breaker latch brackets on top of the left hand guide rail (figure 5, item 8, page 10) when the circuit breaker is in the test / disconnected position. The latch is disengaged by the circuit breaker release handle (figure 7) when the circuit breaker is in the test / disconnected position.

Figure 7: Circuit breaker release handle

© 1996 Square D All Rights Reserved

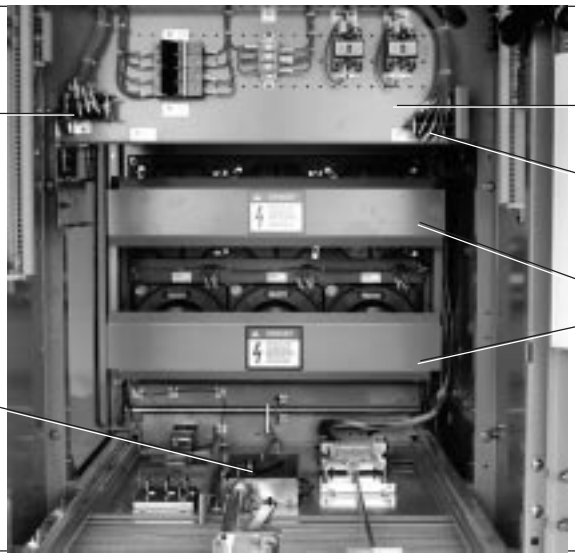

Figure 8: Circuit breaker cell with circuit breaker and barrier removed

⚠ WARNING

HAZARD OF PERSONAL INJURY OR EQUIPMENT DAMAGE

Disconnect power to both line and load connections before removing the barrier for maintenance or repair. Verify power is off with a properly rated testing device.

Failure to observe this precaution can result in severe personal injury or death.

Shutters—Two steel shutters (figure 8) are mounted directly in front of the primary high voltage contacts. The shutters move with a rotary motion, actuated by the racking mechanism. Figure 5, item 14, page 10 shows the shutter actuator.

Circuit Breaker Position Indicator—An indicator beside the racking port (figure 5, item 5, page 10 and figures 9 and 10) shows if the circuit breaker is in test / disconnected, transport, or connected position. When the door is open, two arrows that line up with the front cover are visible on the left hand rail. They also indicate the position of the circuit breaker.

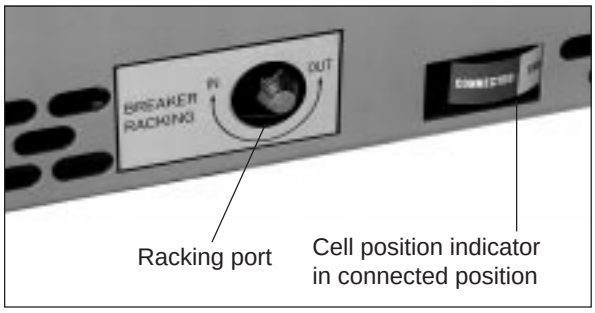

Figure 9: Racking port and cell position indicator

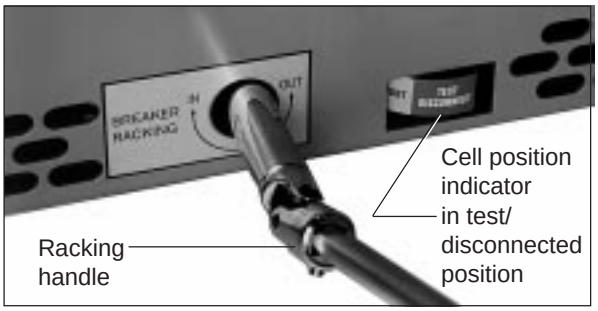

Figure 10: Racking handle on the racking shaft

© 1996 Square D All Rights Reserved

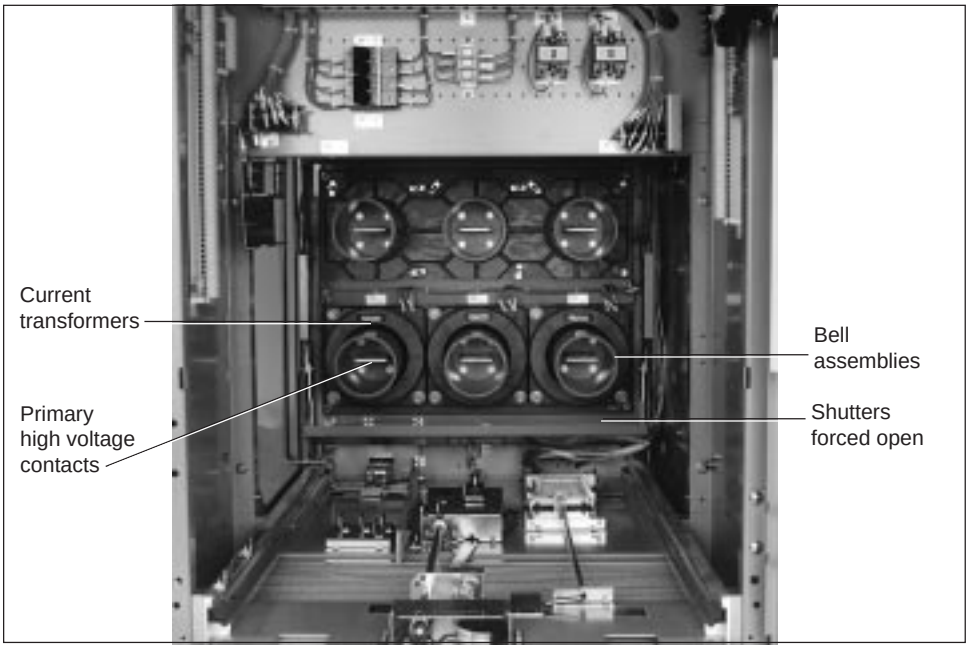

Figure 11: Circuit breaker cell with circuit breaker and barrier removed—shutter forced open

Primary High Voltage Contacts—The primary main contacts are housed in a bell assembly (figure 11) consisting of insulating tubes extending toward the front. The current transformers are mounted around the tubes, which are covered at the open end by the shutter when the circuit breaker is in the test/disconnected position or is withdrawn from the cell. The bell assembly is furnished with molded fiberglass polyester tubes as standard, but may also be equipped with porcelain tubes.

Current Transformers—Bushing-type single- or multi-ratio current transformers (figure 11) can be mounted around either the top or bottom insulating tubes. A maximum of four current transformers, depending on accuracy, can be mounted per phase—two on line, two on load.

Cell Interlock—A cell key interlock provision (figure 5, item 6, page 10) is provided in each circuit breaker cell for locking a circuit breaker out of the connected position. The cell interlock is located in the center of the cell floor and has padlock provisions as standard. It can be equipped with a key interlock when specified by the user. The cell interlock prevents racking the circuit breaker into the connected position. A circuit breaker can be stored in the test/disconnected position with the cell interlock locked.

Ground Contact Bar—A ground contact bar is located on the bottom of the circuit breaker cell. It is directly connected to the main ground bus. A mating set of sliding contacts is located on the underside of the circuit breaker. The contacts engage before the circuit breaker reaches the test position and stay continuously grounded to the connected position.

© 1996 Square D All Rights Reserved

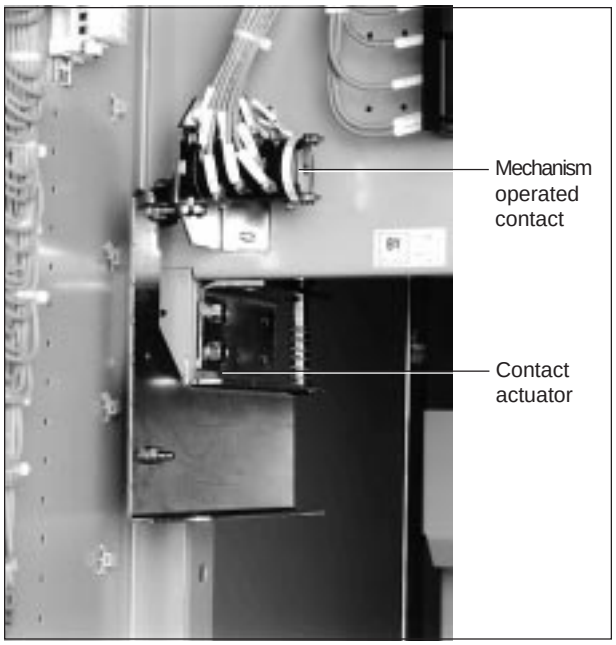

Figure 12: Mechanism operated contacts (MOC)

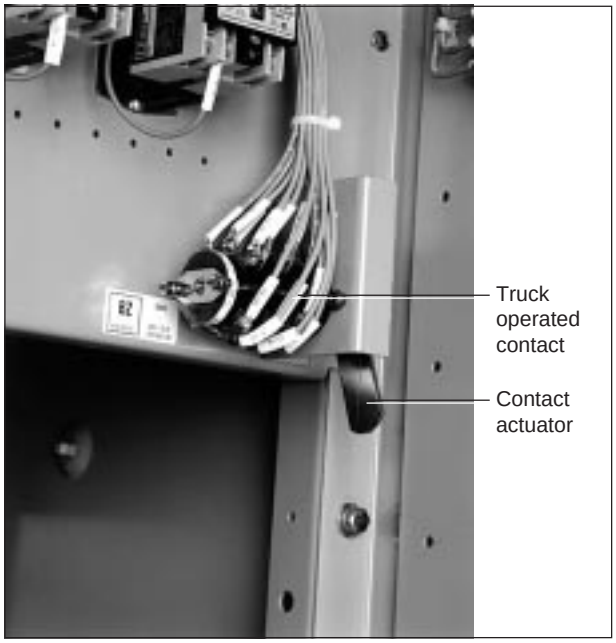

Figure 13: Truck operated contacts (TOC)

Mechanism Operated Contacts (MOC)—Optional—Mechanism operated contacts (figure 8, page 13 and figure 12) are compartment-mounted auxiliary contacts operated by the circuit breaker mechanism. Like circuit breaker mounted auxiliary contacts, they indicate whether the circuit breaker is in the open or closed position. They operate in both the connected and test / disconnected positions.

The MOC unit is mounted on the left side of the circuit breaker cell. It is operated by a mechanism that is driven vertically by a roller on the left side of the circuit breaker.

Truck Operated Contacts (TOC)—Optional—Truck operated contacts (figure 8, page 13 and figure 13) are used to indicate the physical position of the circuit breaker in the compartment . They indicate whether the circuit breaker is in the connected or test / disconnected position.

The TOC unit does not distinguish between the circuit breaker being in the test / disconnected position or withdrawn completely from the compartment.

The TOC unit is mounted on the right side of the horizontal steel barrier in the top of the circuit breaker cell. It is operated by a spring-loaded lever. This lever is activated, just before the circuit breaker reaches the connected position, by a pin on the upper right side of the front cover of the circuit breaker.

© 1996 Square D All Rights Reserved

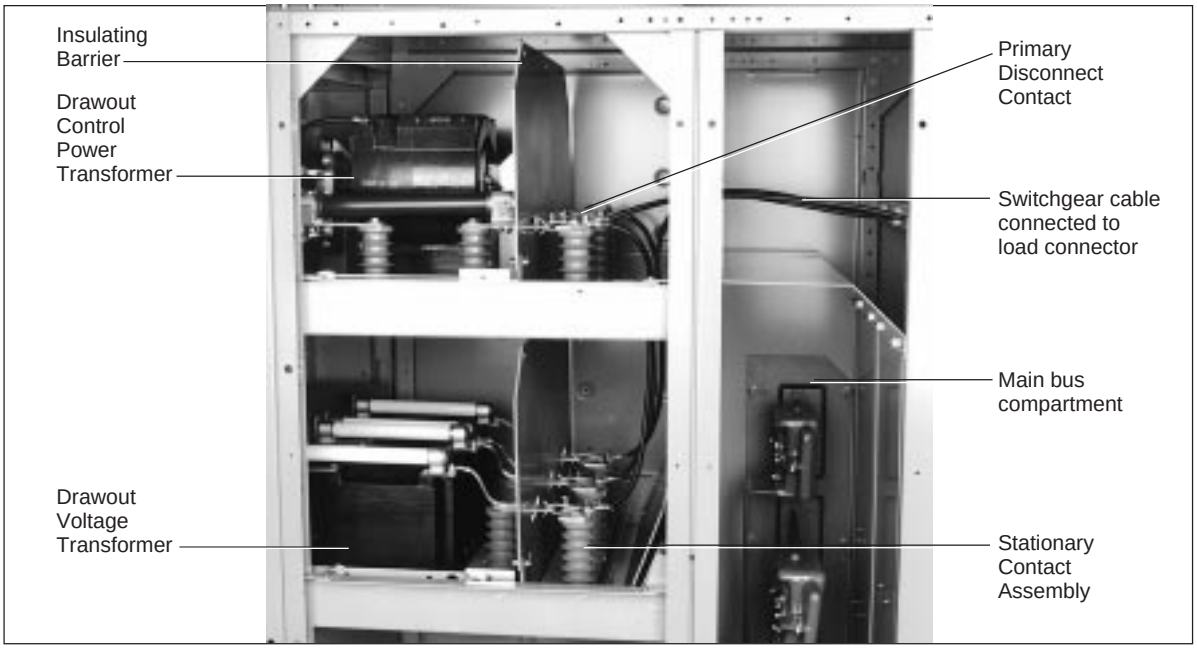

Figure 14: Drawout units in connected position

Voltage Transformer, Control Power Transformer, and Fuse Drawout Units

The voltage transformer (VT), control power transformer (CPT), and fuse drawout units are self-contained drawers (figure 14) that roll on two sliding extension rails from the disconnected to the connected position. The drawer front panel is recessed behind the front door in the connected position. It is held in place by two thumbscrews.

An insulating barrier (figure 14) divides the compartment. The stationary contacts (figure 14) and associated high voltage parts are mounted behind the barrier. Floating, self-aligning line contacts engage the moving contacts as the drawer is inserted into the connected position. As the drawer is withdrawn, a static ground contact mounted on top of the compartment grounds the primary connection.

Drawout Control Power Transformer—The control power transformer (CPT), shown in figure 14, supplies control voltage for circuit breaker closing, capacitor trip charging, and miscellaneous station auxiliary power functions. The transformer is sized for the specific order requirements. Do not add arbitrary non-specified loads after installation. The maximum capacity of the CPT in a drawout unit is 15 kVA.

The CPT, its primary current limiting fuses, and secondary molded case circuit breaker are mounted on the drawer and are withdrawn as an assembly. The secondary circuit breaker handle must be in the off position in order to withdraw or insert the drawer. To release the latch, push the secondary circuit breaker handle to the left (off position). To engage the latch, push the secondary circuit breaker handle to the right (on position) after returning the assembly to the connected position.

© 1996 Square D All Rights Reserved

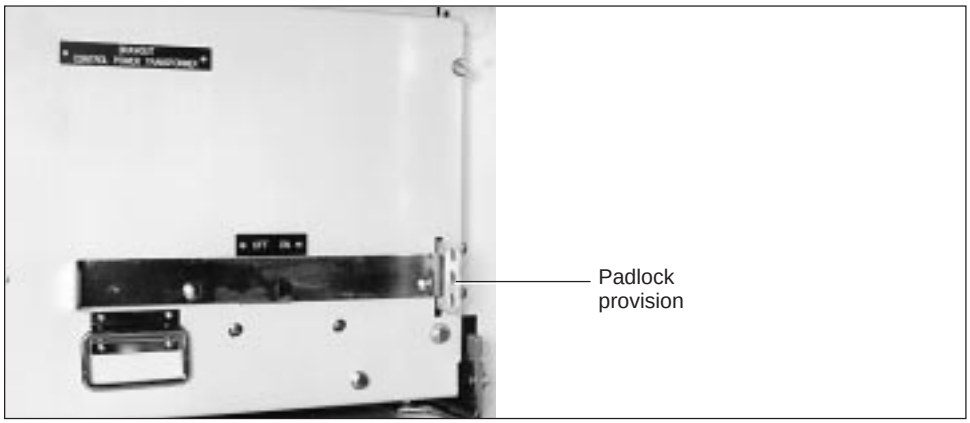

Figure 15: Control power transformer—secondary circuit breaker interlock

Each drawout control power transformer is equipped with a padlock provision (figure 15) which locks the unit in the engaged position.

Secondary sliding finger-type contacts are mounted on the front left side of the drawer (figure 16). They engage fixed-mounted contacts in the connected position.

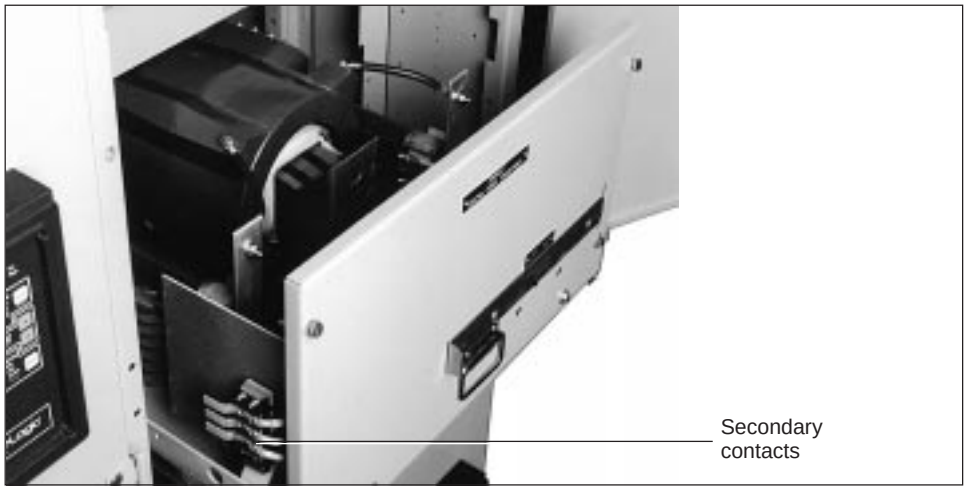

Figure 16: Drawout control power transformer

© 1996 Square D All Rights Reserved

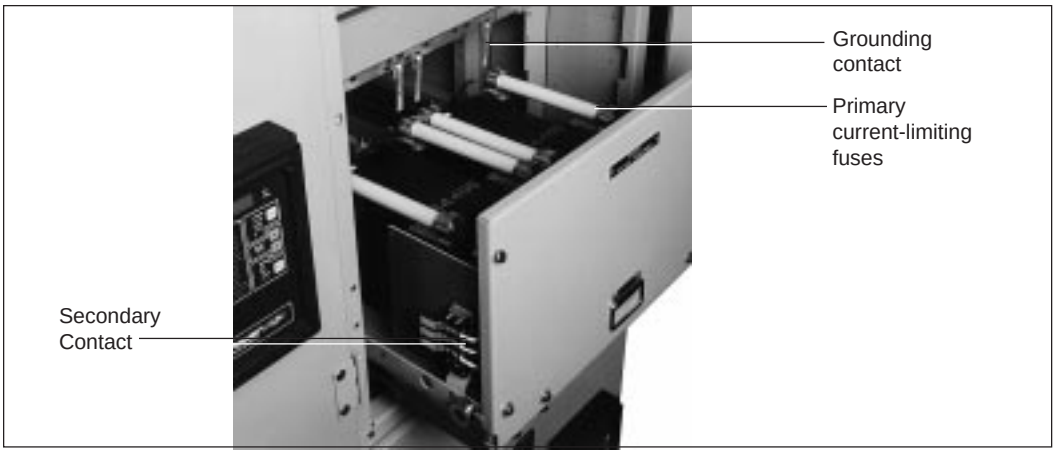

Figure 17: Drawout voltage transformer

Drawout Voltage Transformer—Drawout voltage transformers (figure 17) supply voltage indication for metering and relaying purposes. Primary current limiting fuses are mounted on each voltage transformer. Secondary sliding finger-type contacts (figure 17) are mounted on the front left side of the drawer and engage fixed compartment mounted contacts in the connected position. Secondary fuses for the voltage transformers are located in the front compartment.

Drawout Fuse—Drawout fuses (figure 18) are provided for stationary control power transformers. Fixed mounted CPTs are supplied when three-phase control power is required or control power requirements exceed 15 kVA. The current-limiting fuses are mounted in the drawer and withdrawn as an assembly.

The fuse drawout is interlocked with the secondary circuit breaker by a key interlock system. One interlock locks the drawout in the connected position (figure 19). A second interlock, shown in figure 20, allows the fuse drawout to be withdrawn only when the secondary circuit breaker is in the open position. The secondary circuit breaker with interlock is mounted above or below the drawout unit.

© 1996 Square D All Rights Reserved

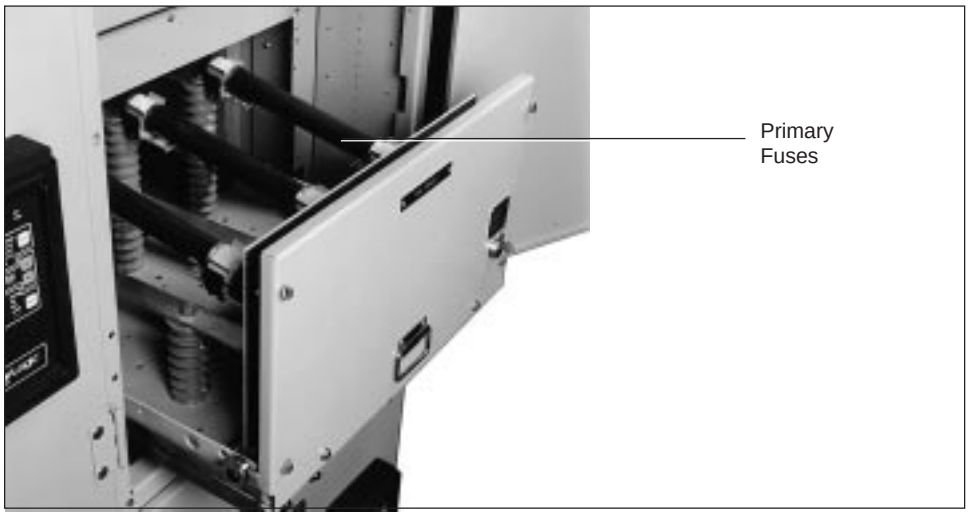

Figure 18: Drawout primary fuses for stationary control power transformer

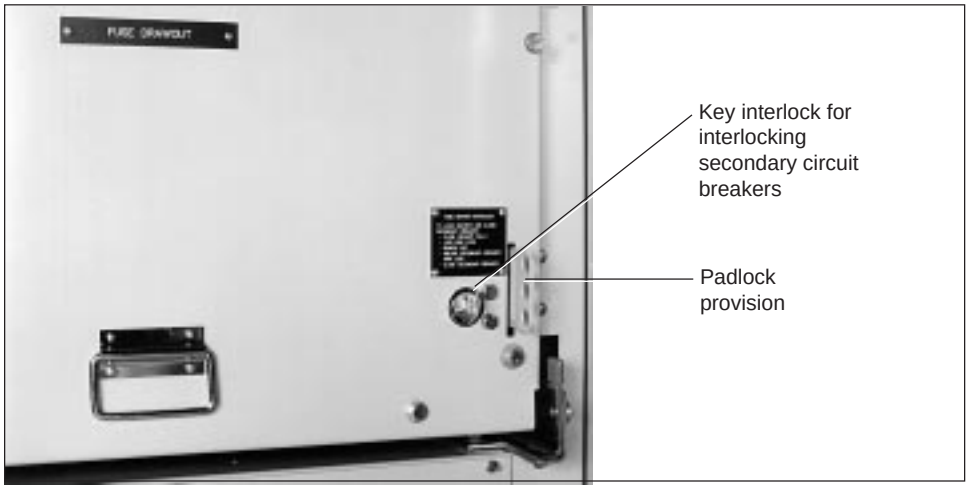

Figure 19: Drawout primary fuses interlock with secondary circuit breaker

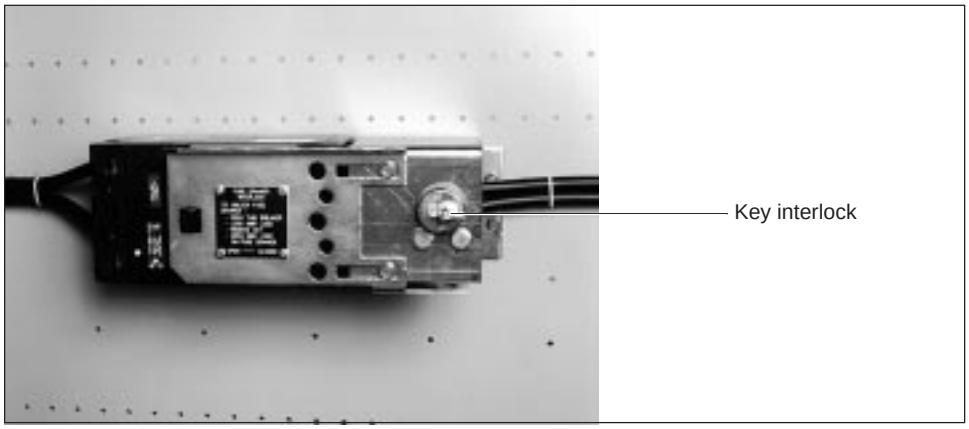

Figure 20: Secondary circuit breaker and interlock for drawout primary fuses

© 1996 Square D All Rights Reserved

Main Bus Compartment

The main bus compartment is located in the center of the switchgear. It is isolated from other compartments by the main bus compartment cover, which consists of removable metal access plates (figure 21). The main bus compartment is accessible from the back (figure 21) through the cable compartment and from the front through the circuit breaker cell.

1200 A and 2000 A main buses are available in aluminum or copper. The 3000 A main bus is always copper.

Each busbar has fluidized bed epoxy insulation rated for 105°C operation. Glass polyester barriers are used to separate the bus compartments between adjacent cells. Optional porcelain inserts are available.

Polyvinyl chloride boots insulate the connection in the main bus compartment, overlapping the epoxy insulation on the busbars. The busbar insulation and boots form an integral insulating system for the equipment to meet its dielectric ratings. The busbar insulation must not be damaged or modified. Boots must be in place before operating the equipment.

Cable Compartments

Each circuit breaker in a vertical section has a separate cable compartment, accessible by removing a steel cover on the back. Insulated load connectors are provided for terminating cables. As standard, the load connectors are punched for terminating two cables per phase with a NEMA 2-hole pattern. Square D provides lugs upon request. Tape and associated material for insulating cable terminations are not supplied as standard.

A ground bus (figure 21) in the cable compartment has lugs on each end for the assembly ground. This ground bus is connected to each circuit breaker compartment ground contact bar and to the individual ground bars in each cable compartment. All instrument transformer, metering, and relaying grounds are also connected to this common ground system.

Conduit must enter the cable compartments, in the areas shown on the customer drawings, from either the top or bottom of the cable compartment. A removable steel cable pull box (figure 21) is provided to isolate cables when two circuit breakers are installed in one vertical section.

NOTE: Conduit should be stubbed in the concrete as part of the site preparation before the assembly is installed, but top entrance conduit must be installed after the assembly is in place. The top covers can be removed, punched to fit the conduit, and put back in place.

The front conduit area is for the bottom circuit breaker when all cables enter from below, and for the top circuit breaker when all cables enter from above. This cable pull box may be removed to install the rear cables first. When required, zero-sequence current transformers (figure 4, page 8 and figure 21) are conveniently located in each cable compartment.

© 1996 Square D All Rights Reserved

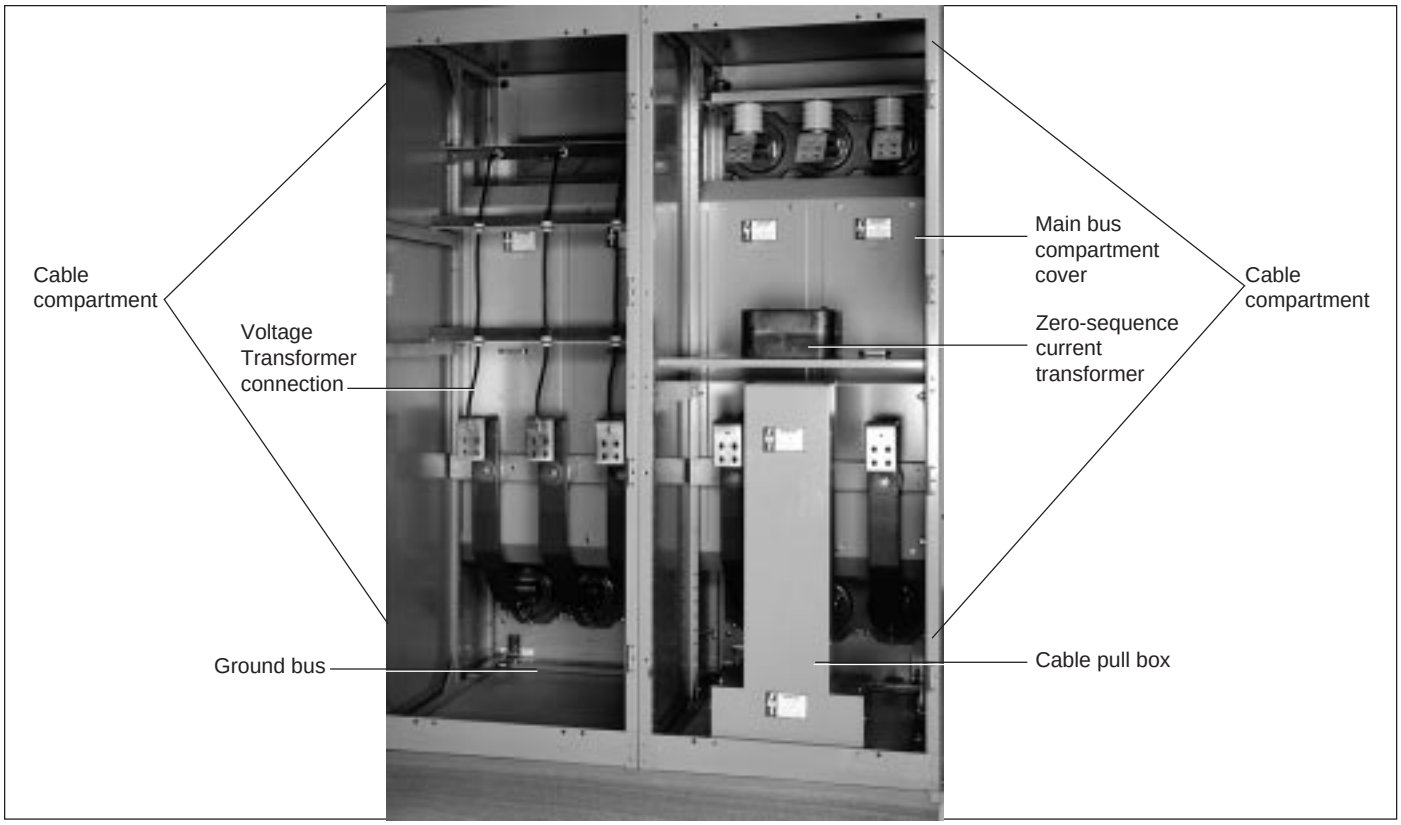

Figure 21: Two bay assembly rear view

Various cable termination systems are used. These are detailed on the plans and specifications. Solderless or compression lugs can be supplied on the load connectors. Potheads are mounted on grounded support brackets. The compound and tape for their internal connections are shipped in a container with the other miscellaneous parts. Tape and insulating material necessary for completing the field connection at the bus pad are not supplied with the assembly.

Surge Arresters

Surge arresters are furnished only when listed in the user's specifications. The vulnerability of the incoming and outgoing lines to lightning strikes or other high voltage transient conditions determines their type and justification. Surge arresters, when specified, are mounted in the incoming and outgoing cable compartments.

© 1996 Square D All Rights Reserved

SECTION 5—OPERATION

Circuit Breaker–Circuit Breaker Cell Interlock System

The circuit breaker and the circuit breaker cell are equipped with an interlock system. The interlocks are designed to:

- Not allow the circuit breaker to be pushed into the cell when the circuit breaker is closed.
- Not allow the circuit breaker to be closed while it is moved between the test and operating position.
- Not allow the circuit breaker to be moved from the operating position when it is closed.
- Discharge both the closing and trip springs when the circuit breaker is being moved from the circuit breaker cell.

Circuit Breaker Operation

Racking Mechanism—The racking mechanism moves the circuit breaker from the test / disconnected position to the connected position and vice versa.

Push the circuit breaker into the compartment to the test / disconnected position, and the disconnect release handle engages (figure 7, page 12).

With the front door closed, insert the racking handle and rotate it clockwise to rack the circuit breaker into the connected position. When in the connected position, the circuit breaker's forward motion stops.

With the door closed, the position indicator (figure 9, page 13) shows if the circuit breaker is in the test / disconnected position, in transport, or in the connected position. With the door open, two arrows on the left hand rail show if the circuit breaker is in the test / disconnected position or in the connected position.

To remove a circuit breaker from the connected position to the test / disconnected position, open the circuit breaker electrically with the compartment door closed, and with the racking handle, move the circuit breaker to the test / disconnected position.

⚠ WARNING

HAZARD OF BODILY INJURY OR EQUIPMENT DAMAGE

When the switchgear is energized, always open and close the circuit breaker, and rack the circuit breaker from one position to another with the door closed.

Never use force to move the circuit breaker inside the circuit breaker cell. If a mechanism is not operating smoothly, look for the cause.

Failure to observe these precautions can result in death, severe personal injury, or equipment damage.

© 1996 Square D All Rights Reserved

Control Power Plug—In normal operation, the Control Power Plug automatically connects and disconnects as the circuit breaker is moved into and out of the connected position.

To test the control system with the circuit breaker in the test / disconnected position, rotate and pull the handle of the secondary control power receptacle forward until it can be rotated again and locks the receptacle in position. The circuit breaker can now be electrically operated the same as in the connected position. After checking all electrical functions, push the receptacle back in its normal operating position. Only then, rack the circuit breaker into the connected position.

Disconnect Position Latch—The disconnect position latch prevents the circuit breaker from rolling out of the compartment in the test / disconnected position. To remove the circuit breaker from the cell, pull the release handle of the circuit breaker.

Manual Spring Charging Mechanism—In normal operation, when the control plug is engaged, the motor automatically charges the circuit breaker closing springs. The springs can also be charged manually, using the manual spring charging mechanism. This feature is provided for testing and maintenance purposes, and for emergency operating conditions.

⚠ CAUTION

HAZARD OF EQUIPMENT DAMAGE

Never manually close a circuit breaker in the connected position unless the opening source of power and protective relays are connected and operable.

Failure to observe this precaution can result in equipment damage.

Manual Close and Open Pushbuttons—Manual close and open pushbuttons are located at the front of the circuit breaker. These pushbuttons operate the circuit breaker whether the circuit breaker is charged manually or electrically. Use them only when testing the circuit breaker during start-up or maintenance. Refer to the Type VR Circuit Breaker instruction bulletin 6055-31.

⚠ CAUTION

HAZARD OF EQUIPMENT DAMAGE

When the switchgear is energized, never use the manual open and close pushbuttons on the front of the circuit breaker. Use the control switch with the front door closed.

Failure to observe this precaution can result in equipment damage.

© 1996 Square D All Rights Reserved

SECTION 6—INSTALLATION

Site Preparation

Good site preparation is essential for reliable operation of the assembly. Carefully compare the plans and specifications with the customer drawings provided. Be sure to:

- provide adequate ventilation at all times so the ambient temperature around the assembly does not exceed 104°F (40°C). Clean, dry, filtered air should be supplied.
- provide adequate lighting in both the front and back aisle spaces. Also provide convenience outlets in both areas for electrical hand tool use.
- provide adequate floor drains.
- route sewer, water, and steam lines so they do not pass over or near the assembly. Dripping liquids may damage the insulation.

The weight of the average complete switchgear unit is 2500 lb (1130 kg). Refer to Table 1 to determine switchgear and component weights for handling and structural considerations.

Table 1: Switchgear and Component Weights

Switchgear unit	2100 lb (950 kg)
Circuit breaker - 1200 A, 36 kA	380 lb (170 kg)
Circuit breaker - 1200 A, 49 kA	430 lb (195 kg)
Circuit breaker - 2000 A, 36 kA	450 lb (205 kg)
Circuit breaker - 2000 A, 49 kA	500 lb (225 kg)
Circuit breaker - 3000 A	700 lb (320 kg)
Drawout unit 2 - 15 kV VTs	210 lb (95 kg)
Drawout CPT 15 kVA	270 lb (120 kg)
CPT Fixed Mounted 37.5 kVA	580 lb (260 kg)
CPT Fixed Mounted 50 kVA	750 lb (340 kg)
3 Arrester - intermediate 15 kV	120 lb (55 kg)

© 1996 Square D All Rights Reserved

Foundation

The switchgear **must** be installed on a flat, level surface. Square D recommends installing the switchgear on a concrete pad leveled to 1/16 in (1.6 mm) in any square yard, with steel channels (figure 22) installed in the pad (figure 23) for anchoring the switchgear.

Pour a 7 ft (2135 mm) wide aisle space in front of the mounting pad, flush with and finished to the same tolerance as the mounting pad. This level surface is necessary for the circuit breaker lift truck and for inserting the circuit breakers into the bottom compartment.

NOTE: A minimum of 3 feet (1 meter) is absolutely necessary on the right end facing the front of the line-up. This space is necessary for door clearance when removing the circuit breakers.

Conduits should be stubbed a maximum of 1 in (25 mm) above floor level. To simplify moving the switchgear into place, keep the conduit flush with the surface of the floor. Position the conduit very accurately so that there is no mechanical interference with the assembly frame. Eliminate continuous loops of reinforcing rod or structural steel around any single conductor of a three-phase power circuit.

Switchgear Installation

Shipping Section Installation

Two-high 4.76–15.0 kV metal-clad indoor switchgear may be shipped in one or more shipping sections, depending on the number of cells in the assembly. **Before installing each section, refer to the customer drawings and section markings to ensure proper alignment.** When installing two shipping sections, install the section that allows the most maneuverability first before installing the second section.

When more than two shipping sections are involved, carefully measure the conduit spacings and compare with the customer drawings. Cumulative error in conduit location may require starting with the center shipping section and working toward either end. If the conduits are properly located, install the end shipping section first that allows the most maneuverability before installing the additional sections.

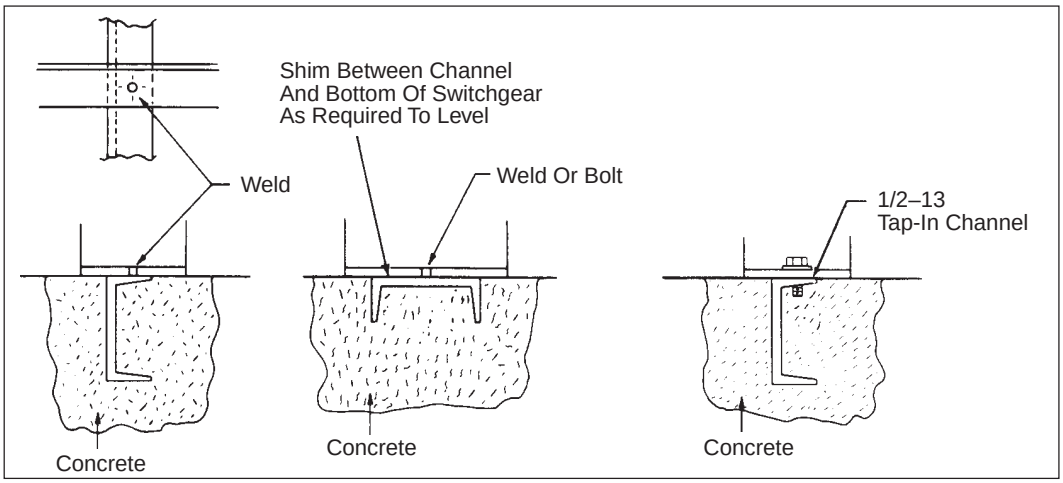

Figure 22: Switchgear mounting floor channels

© 1996 Square D All Rights Reserved

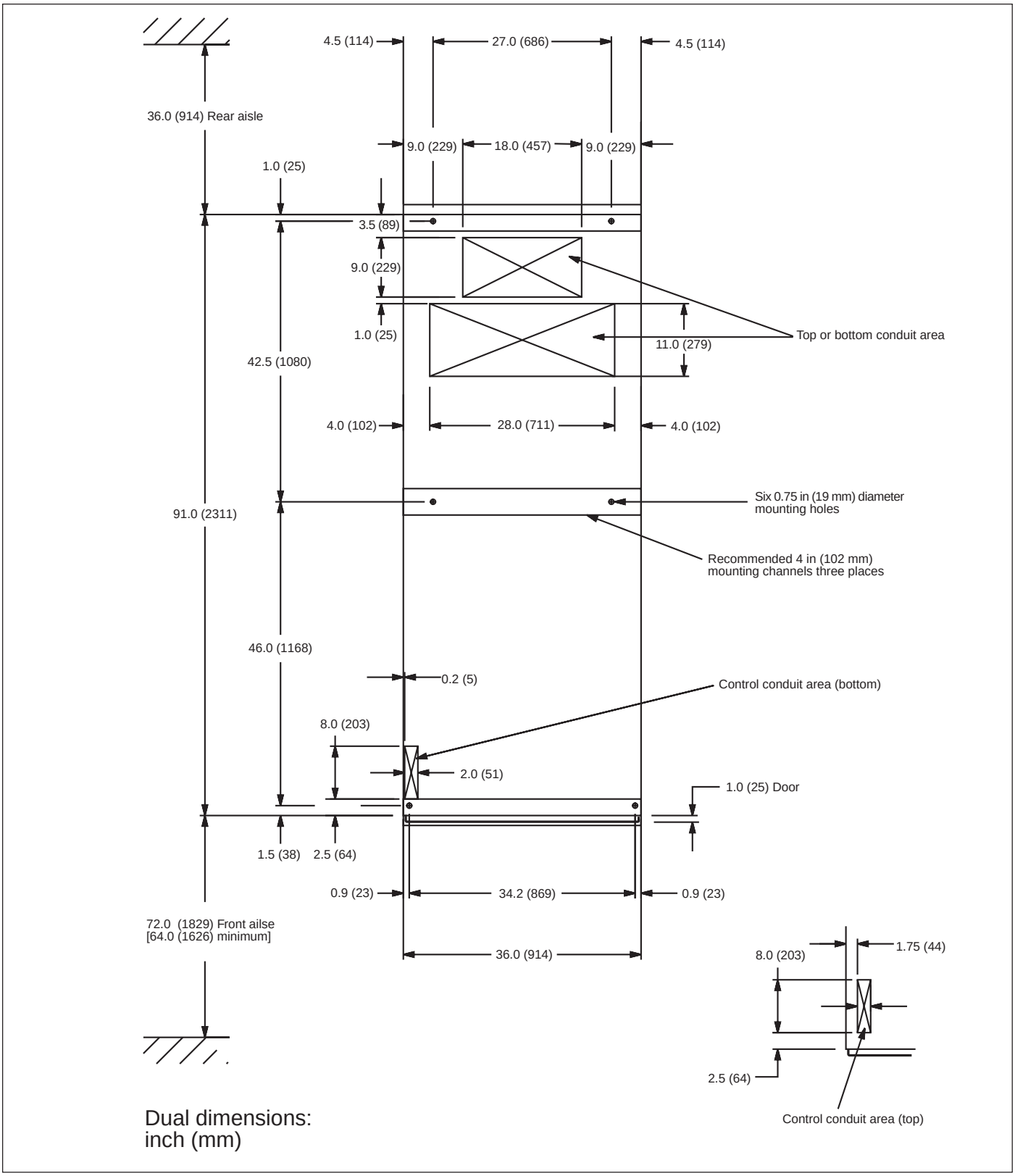

Figure 23: Floor plan

© 1996 Square D All Rights Reserved

Sweep the pad before installing any sections. Move the sections, with skids intact, into place. If rollers must be used, move with the skid in place. Remove the skid only when the switchgear is in proper position on the pad. Lower the first section onto the pad. If necessary, place a 2 in x 6 in (610 mm x 1830 mm) board across the assembly, and pry into place. Do not pry directly on the structure, doors, or covers. Before proceeding, verify that:

- the conduits are in the center of the cutouts
- the back of the unit is perpendicular to the pad and has proper clearance
- the mounting holes line up with the holes in the mounting channels

Level each section before installing the next. Install steel shims, when necessary, between floor channels and switchgear. After leveling a section, bolt it to any previously installed sections before proceeding. If the sections do not fit snugly together, remove the most recently placed section with the crane. Check for obstructions and try again. Do not attempt to pull sections together with the hardware.

All shipping sections must be bolted together in place before bolting or welding sections to the channel sills, or installing the horizontal main bus. After all the sections are level and bolted together, verify again that all shipping sections are in their correct position according to the job drawings. If they are, weld or bolt the switchgear to the pad. For bolting, use 1/2-13 bolts.

Main Bus Installation

Install the main bus at the shipping break only after all sections are securely anchored in place and no additional movement of the assembly will occur. Busbar extensions for shipping breaks are shipped with the miscellaneous items.

A typical main bus assembly is shown in (figure 24). The side and rear views (figure 24) of the assembly show the general arrangement of the main bus and riser. The side (figure 25) and top (figure 26) views show the different bus connections and the orientation of the filler and splice plates. When aluminum bus is furnished, some of the circuit breaker connections and splice or filler plates are copper.

© 1996 Square D All Rights Reserved

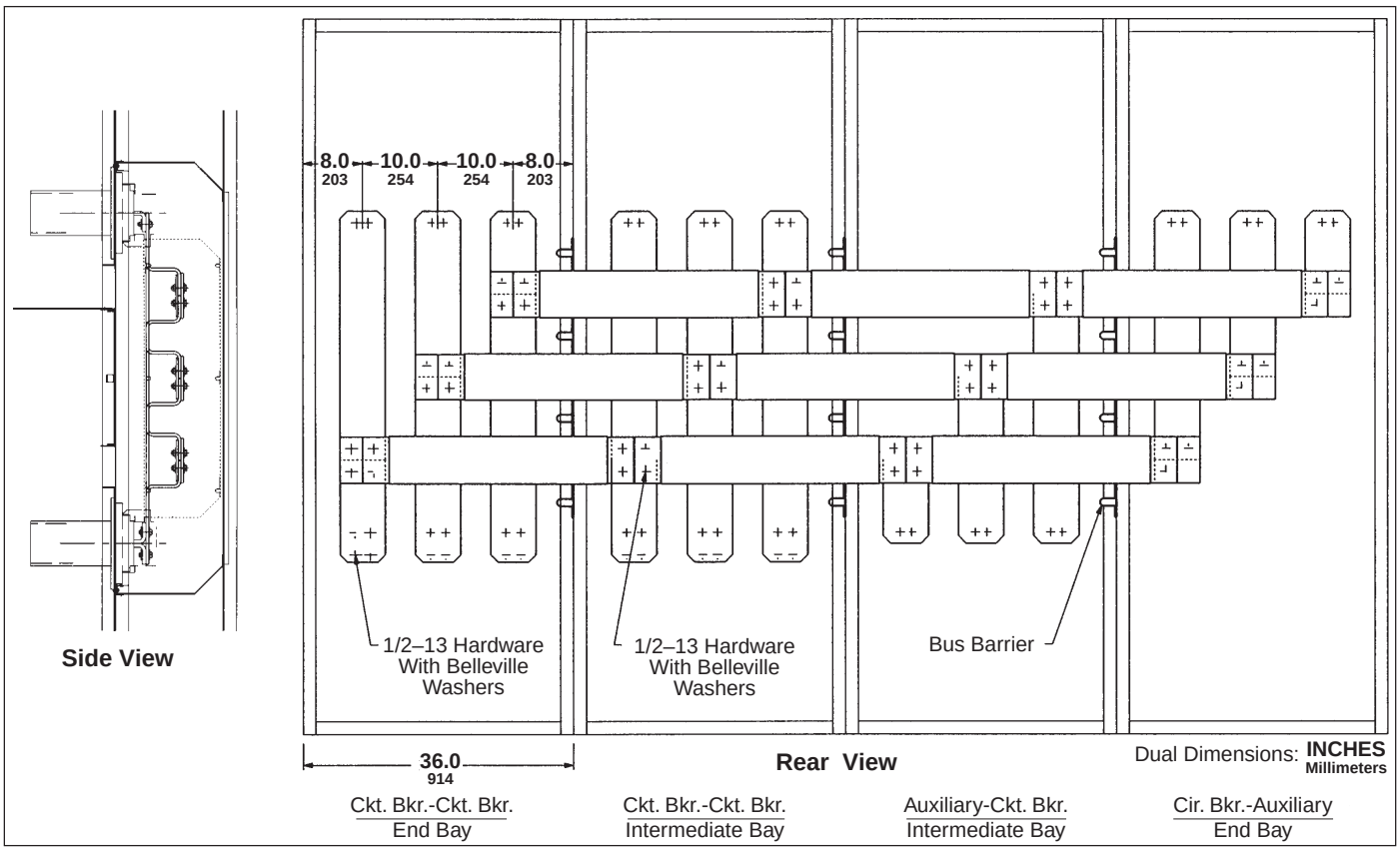

Figure 24: Main bus assembly

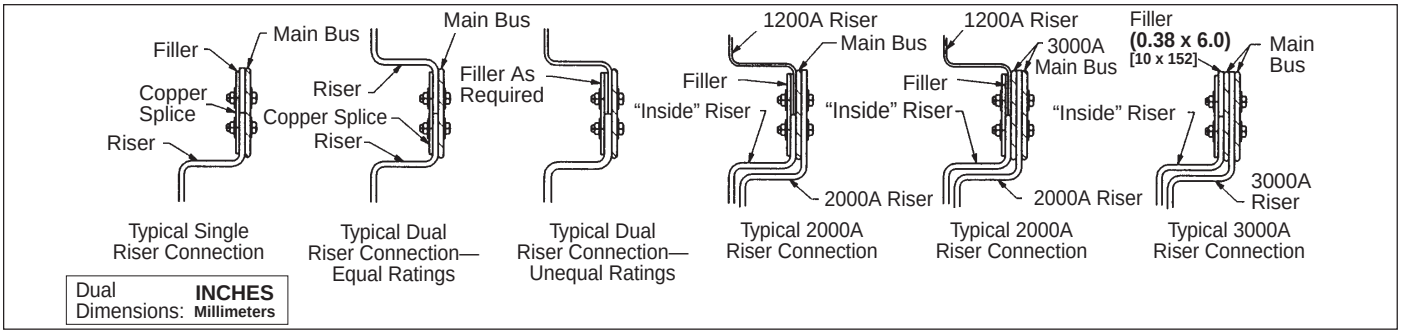

Figure 25: Main bus connections—side view

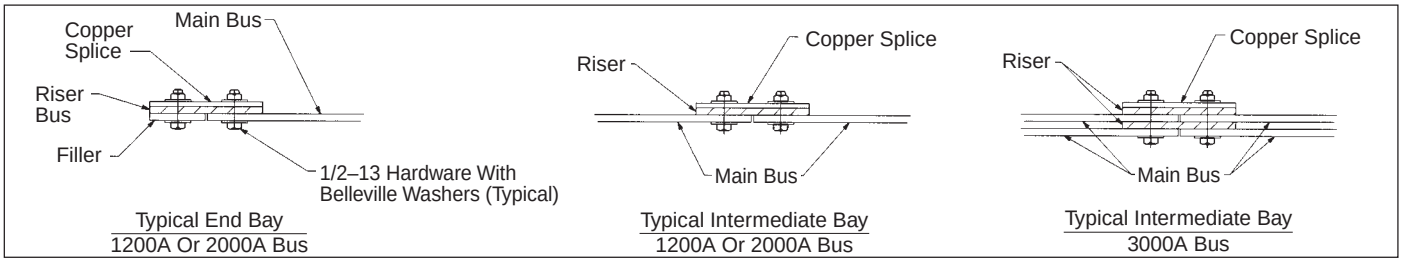

Figure 26: Main bus connections—top view

© 1996 Square D All Rights Reserved

Main Bus Installation (cont.)

The standard switchgear is furnished with fiberglass-polyester bus barriers between bays. Porcelain "pass-throughs" are available as an option (figure 27).

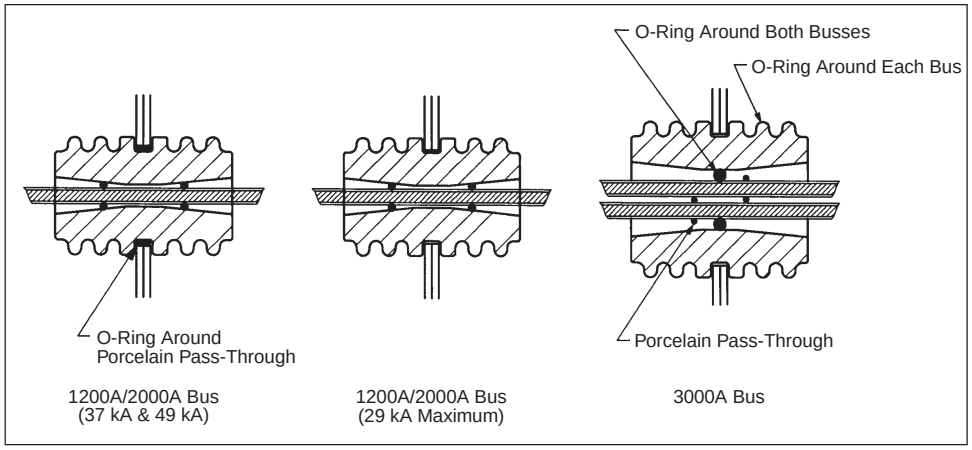

Figure 27: Main bus pass-through, porcelain—optional

For porcelain pass-throughs only, O-rings must be installed inside the pass-throughs to cushion the busbars under short circuit conditions.

An easy way to install two busbars is to place the larger O-ring around both bars at the correct distance from the end (figure 27), and the smaller rings around each bar approximately 1 in (25 mm) on each side from the large O-ring. Next, slide both bars into the porcelain (one end of the porcelain may have a larger opening).

When busbar stand-off insulator installation is required on shipping sections, refer to figure 28. Fiberglass-polyester washers and O-rings must be installed as shown.

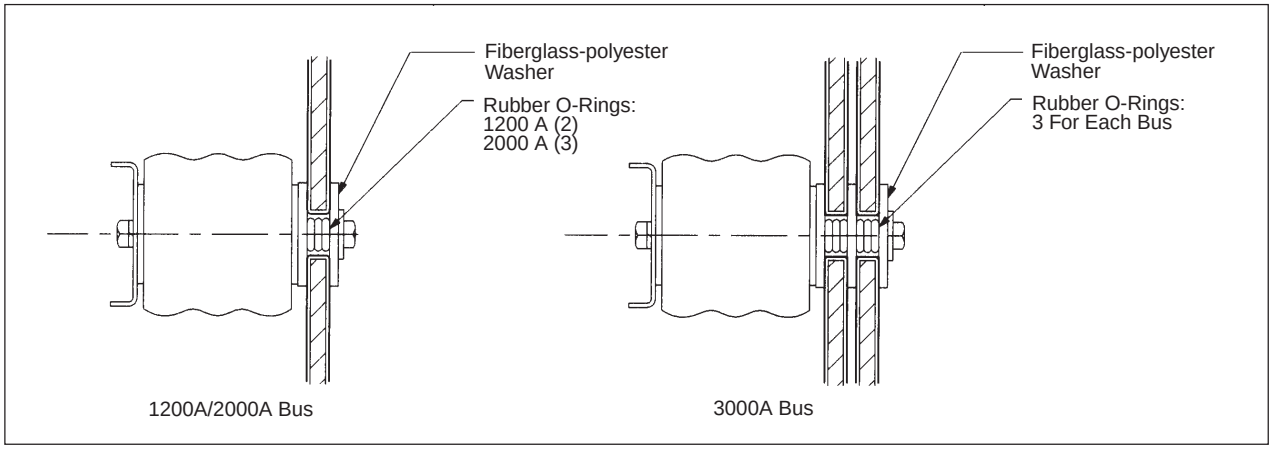

Figure 28: Stand-off bus support

© 1996 Square D All Rights Reserved

Main Bus Installation (cont.)

Remove the main bus covers and the insulating boots. Install one phase at a time by sliding the busbar through the bus barriers and loosely bolting the horizontal bus to the vertical bus. Do not bend or force the bus to make this connection. The through bushings and the divided insulating barrier may be loosened if necessary. They have sufficient clearance and adjustment to compensate for minor field misalignment of shipping sections. Tighten the bolts holding the busbar joints only after all three busbars are in place and properly fitted. Use a torque wrench to ensure that the bolts for busbar connections are tightened in accordance with Table 2.

Table 2: Bolt Torque

Bolt Size	Mechanical Joints	Busbar Connections
1/4-20	7 lb-ft (9.45 N•m)	—
5/16-18	14 lb-ft (18.91 N•m)	—
3/8-16	21 lb-ft (28.36 N•m)	30 lb-ft (40.52 N•m)
1/2-13	42 lb-ft (56.72 N•m)	55 lb-ft (74.28 N•m)

Ground Bus Connection

Connect the ground bus splice at each shipping section. Remove the hardware and position the splice plate, then replace hardware on both ends. The ground bus must be connected for proper operation of relaying and instrumentation, and for personnel safety.

Control Wiring Connections

Consult the customer wiring diagram for reconnection of wiring at the shipping break. Each wire is identified and has been previously connected during assembly and testing at the factory. If the identification is missing or blurred, ring-out before connecting to avoid control circuit and instrument panel problems at start-up.

Circuit Breaker Installation

With all primary and control power circuits de-energized, insert each circuit breaker into the connected position of its respective circuit breaker compartment. Observe the operation of the ground contacts, shutters, and disconnect position latch.

Remove each circuit breaker from its compartment. Open the shutters and check that tracks made in the contact grease by the fingers of the main disconnects extend back a minimum of 1/2 in (13 mm) from the front edge of each bar. Ensure that the ground shoe leaves tracks on the ground bus.

Do not force circuit breakers into circuit breaker compartments. Compartment rating interlocks prevent inserting circuit breakers into incorrect cells.

© 1996 Square D All Rights Reserved

VT, CPT, and Fuse Drawout Installation

Withdraw the drawout control power fuse drawer and the drawout voltage transformer drawer. Observe their operation. Verify that the static grounding contacts touch the moving drawout contacts and that the primary and secondary contacts make proper contact.

High-Potential Testing

Before making external power connections, perform a high-potential (hi-pot) test on the bus and circuit breakers as an assembly. To prepare for this test:

1. Disconnect lightning arresters.
2. Withdraw the control power transformer drawer, the voltage transformer drawer, and drawout fuse (if provided).
3. Place each of the circuit breakers in its proper circuit breaker compartment in the connected position. Charge their springs manually, and then close each circuit breaker by using the pushbutton.

Use a reliable transformer-type tester with a built-in voltmeter and milliammeter for hi-pot testing. Capacitor loaded bench-type testers with neon bulb indicators do not have sufficient capacity to give reliable results.

Table 3 gives normal test values for dry, clean, new assemblies. Field hi-pot tests are made at 75% of factory test voltages in accordance with ANSI standards.

Table 3: One Minute High-Potential Test ①

Assembly Rated Maximum Voltage	Factory Test Voltage	Field Test Voltage	
		AC	DC
4.76 kV	19 kV	14 kV	20 kV
8.2 kV	36 kV	27 kV	38 kV
15 kV	36 kV	27 kV	38 kV

① All voltages are 60 Hz rms symmetrical.

If satisfactory results are not obtained, locate the problem, correct it, and rerun the test before proceeding. If results are acceptable, the power cables, ground wires, external wiring, and battery (if supplied) can be connected to the assembly.

Phasing

In accordance with NEMA standards, all bus within the switchgear is phased A-B-C left to right, top to bottom, and front to back when viewing the assembly from the front (the circuit breaker compartment side). If, for any reason, the bus must be phased differently, the different phase will be identified on the bus with a label.

Cable Connections

Be very careful when making up all types of cable terminations, as terminations are critical to the successful operation of the electrical distribution system. Avoid sharp turns, edges, or corners in order to prevent damage to the cable insulation. Follow the cable manufacturer's recommendations for minimum bending radius. These instructions will vary from manufacturer to manufacturer.

© 1996 Square D All Rights Reserved

Solderless or compression-type cable lugs are the most common method for connecting power cables to metal-clad switchgear. When making the terminations for each type of power cable, follow the cable manufacturer's instructions. After the cable connections are made, insulate them as follows:

1. Place 3M brand Scotchfil putty around the lugs and bolts to reduce the concentrated field created by their irregular shapes (figure 29). Apply a layer of No. 13 semiconducting tape over the Scotchfil. Half-lap the tape, which must extend onto the conductor. Do not extend the tape up over the bus epoxy insulation. Apply Scotch brand No. 130C tape over the No. 13 tape. Half-lap this tape for two layers on 4.76 kV installations, and four layers on 8.25 kV and 15.0 kV installations. For 4.76 kV applications, extend this tape 1-1/2 in (38 mm) up over the bus insulation and cable insulation. Extend the tape 2 in (51 mm) for 15.0 kV applications.
2. Apply two layers of Scotch Brand No. 22 tape, extending the tape up over the No. 130C tape in all directions. The tape and other insulating materials for completing these field connections are not supplied with the switchgear.
3. When potheads or terminators are supplied for terminating power cables, follow the pothead manufacturer's instructions for terminating the cables in these devices. To facilitate installation of the power cables, the bus side is not taped. After the cables are installed, insulate the pothead-to-bus connections according to the cable lug insulation instructions in this section.

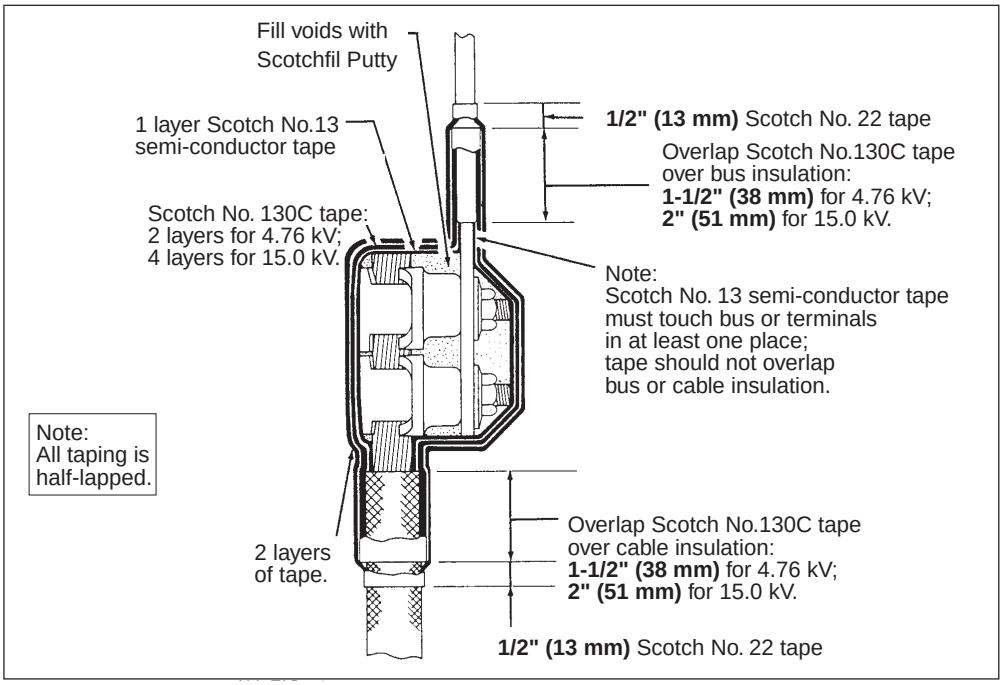

Figure 29: High voltage cable lug insulation

NOTE: The external surface of each shielded cable is at ground potential and must be positioned a minimum of 6 in (152 mm) from any live part (even its own pole), including insulated bus bars.

© 1996 Square D All Rights Reserved

SECTION 7—START-UP

⚠ DANGER

HAZARD OF ELECTRIC SHOCK, BURN, OR EXPLOSION

All personnel involved in the start-up operation should be thoroughly familiar with the information in this instruction bulletin and customer drawings provided before working on this equipment.

Failure to observe these precautions will result in death, severe personal injury, or equipment damage.

Training of personnel for final start-up can be provided or contact your local Square D field office for the local Square D field office for the local Field Services office.

To start up the switchgear:

1. Vacuum out every compartment. Remove all loose parts, tools, miscellaneous construction items, and litter.
2. Replace all the main bus covers and any other barriers or covers which were removed during installation.
3. Ensure all insulating boots are installed.
4. Install the cable compartment back covers.
5. Connect the battery charger and batteries (if used) to the switchgear control bus according to the order drawings.
6. Unblock all of the relays and set to the relay schedule. Using a relay tester, verify the settings and electrical operation of each relay.
7. Ensure that the drawout control power transformer (or drawout fuse drawer) has the current limiting fuses in place. Pull the drawer out to the withdrawn position.
8. Place all circuit breakers in their compartments in the test / disconnected position.
9. Connect a temporary source of low-voltage power to the stationary secondary contact of the control power transformer or any logical point (consult the customer schematic and wiring diagram). Open the secondary circuit breaker and remove the primary fuses.
10. Rack one circuit breaker at a time into the connected position. Then, electrically close and open the circuit breaker with the door-mounted circuit breaker control switch. Open the circuit breaker by temporarily closing the contacts of each protective relay. Reset the relay targets after each operation and rack the circuit breaker into the test / disconnected position.

© 1996 Square D All Rights Reserved

11. Electrically operate from remote control locations and check the remote indicating lights.
12. Operate all electrical interlocks, transfer schemes, lock-out relays, and other control functions to ensure proper operation.
13. Remove the temporary source of low voltage power and make the permanent connection of low voltage power. Rack all circuit breakers into the connected position. Insert the drawout control power transformer, drawout fuses, and drawout voltage transformers into the connected position.
14. Using a properly rated tester, verify again that trip voltage is available at circuit breaker terminals in each compartment.
15. Energize incoming high voltage circuits.
16. Close circuit breakers to establish electrical service.

© 1996 Square D All Rights Reserved

SECTION 8—INSPECTION AND MAINTENANCE

Perform inspection and maintenance on the basis of operating conditions and experience. Abnormal operation or conditions may require immediate corrective action.

⚠ DANGER

HAZARD OF BODILY INJURY OR EQUIPMENT DAMAGE

- Perform inspection and maintenance only with the main sources of power disconnected and locked open with a “work” lock.
- Be sure there is no backfeed through any feeder circuit.
- Ground the main and feeder circuits before touching the main bus, bus pads, or primary contacts.

Failure to observe these precautions will result in death, severe personal injury, or equipment damage.

Main Bus Compartment

Remove the front and rear covers from each main bus compartment. Inspect the busbars, primary contact supports, and insulating barrier(s). Check all busbar connections, and torque all 1/2 inch bolts to 55 lb-ft (74.28 N • m).

Slight discoloration or tarnish of the silver plate is normal and of no concern. Severe discoloration of the silver plate is an indication of an improper or loose contact and overheating. Clean the discoloration from the contact surfaces of the busbar and primary contact. Use an abrasive pad such as Scotch Brite.

Vacuum each compartment to remove dust, spiderwebs, and so forth. Wipe off the insulation with a clean cloth.

Cable Compartment

Inspect the load connectors, stand-off insulators, primary contact supports, and all accessible cable terminations for indications of insulation deterioration. Vacuum each compartment and wipe off all insulation. Replace removable back covers.

Circuit Breaker Compartment

Withdraw each circuit breaker from its compartment, and thoroughly inspect each of the moving mechanisms in the compartment.

The shutters should raise and lower smoothly with no indication of binding, twisting, hesitation, or hang-up. Inspect the shutter hardware. Tighten if necessary.

© 1996 Square D All Rights Reserved

For the purpose of maintenance, the interlock which blocks the operation of the mechanism without a circuit breaker in the cell can be defeated by simultaneously holding the racking block lever (figure 5, item 11) down and turning the racking handle.

The primary contacts should have a silver-gray appearance, indicating good contact with the circuit breaker separable contacts. Slight discoloration or tarnish of the silver plate on the primary contact is normal. Severe discoloration of the silver plate is an indication of excessive heating and should be corrected. Typical causes are:

- poor contact between the circuit breaker separable contacts and the primary contacts
- loose hardware or otherwise improper contact at the bus connection

Clean the discoloration and tighten the contact mounting bolts to the proper torque. See Table 2, page 30. Inspect the primary contact and support insulators.

The ground contact bar should have marks indicating good contact with the circuit breaker sliding contacts. Clean the contact surfaces, removing grease and dirt buildup. Inspect and tighten the hardware and re-grease.

Inspect the stationary control power receptacle, ensuring that the molding is free of cracks, the female contacts are clean, and the assembly is free to move. Clean the front and back surfaces of the receptacle to remove any contamination buildup. Vacuum the compartment, and wipe off the primary contact high voltage insulating tubes and support insulation with a clean, dry cloth.

Lightly lubricate the primary contacts and the ground contacts with Mobilux EP 1, Square D part number 1615-100790.

Lubricate all moving joints (shutters, MOC, TOC, and so forth) with Mobilgrease 28, Square D part number 1615-100950.

Check all terminal block connections for loose hardware and crimp-on terminal conditions. Make certain that the hinge wiring to the door is not frayed and has no insulation damage. Route all wires through the hinge loop.

Circuit Breakers

Consult the individual circuit breaker instruction and maintenance manual for cleaning, adjustment, and lubrication information.

VT, CPT and Fuse Drawout Units

Pull the drawer to the fully withdrawn position. Inspect the moving and stationary primary and secondary contacts and the static ground contacts. Clean the contact surfaces, removing any burn or pit marks if required. Use an abrasive pad such as Scotch Brite.

Remove the current limiting fuses, and inspect the fuse clip and fuse contact surfaces. Inspect the transformer for indication of insulation deterioration. Tighten all hardware, including the secondary contact wiring terminals.

© 1996 Square D All Rights Reserved

Vacuum the compartment and drawer. Wipe off the insulation and control power transformer with a clean, dry cloth.

Lightly lubricate the moving primary and secondary contacts and fingers with Mobilux EP 1, Square D part number 1615-100790.

Lubricate all rollers and sliding parts with Mobilgrease 28, Square D part number 1615-100950.

Inspect the interlock mechanism for proper operation. Replace the current limiting fuses, but leave the drawer in the withdrawn position until all the inspection and maintenance is completed.

Re-energizing

Insert all of the circuit breakers to the test / disconnected position with their secondary control power plugs engaged, and close the compartment doors. Connect the control power source.

Close the main source of power, and operate each circuit breaker electrically in the test / disconnected position.

If all controls are functioning properly, disconnect the secondary control plugs. Rack the circuit breakers into the connected position. Close the circuit breakers and resume normal operation.

© 1996 Square D All Rights Reserved

SECTION 9—ACCESSORIES

Circuit Breaker Lift Truck

One circuit breaker lift truck (figure 30) is required for each two-high line up. The cradle is raised and lowered by a self-braking worm and pinion drive system with a winch and wire cable. No ratchet release or locking is required because of the automatic load-retaining clutch feature. Rotating the handle clockwise raises the cradle. Rotating the handle counterclockwise lowers the cradle.

To remove a circuit breaker from the cell with the lift truck:

1. Push the lift truck toward the circuit breaker compartment so the cradle is square with the front of the circuit breaker cell.
2. Raise the cradle until the hook brackets on each side of the cradle clear the blocks on each side of the circuit breaker cell rails.
3. Lower the cradle until the hook brackets lock over the blocks on each side of the circuit breaker cell rails.
4. Roll the circuit breaker onto the lift truck.
5. Secure the circuit breaker on the lift truck using the safety cable provided.
6. Raise the cradle until it clears the blocks on each side of the circuit breaker cell rails.
7. Remove the lift truck and circuit breaker from the cell and lower the cradle to the floor.
8. To remove the circuit breaker from the lift truck, disconnect the safety cable from the front of the circuit breaker.
9. Push the circuit breaker slightly toward the back of the cradle and pull the lever on the back of the cradle while rolling the circuit breaker off of the cradle.

Figure 30: Circuit breaker lift truck

© 1996 Square D All Rights Reserved

Figure 31: Wall-mounted test cabinet—optional

Test Cabinet—Optional

An optional wall-mounted test cabinet (figure 31) is furnished when listed in the user's specifications.

The test cabinet consists of a small enclosure with a power on-off toggle switch, white power on indicating light, red circuit breaker closed indicating light, green circuit breaker open indicating light, close and open pushbuttons, and an 8 ft (2440 mm) cable with a secondary control receptacle which can be plugged directly into the circuit breaker control plug. Refer to the customer drawings for the external power connections and requirements necessary for the cabinet. A convenient terminal block is provided inside the test cabinet for these connections.

Ground and Test Device—Optional

Two types of ground and test devices are available:

- manual
- automatic

Ground and test devices are safety devices, typically used for:

- grounding of circuits during maintenance periods
- connection points for applying voltage for hi-pot testing and cable testing
- access to both lineside and loadside circuits for phase sequence testing

A complete description, operating instructions, and maintenance information is included in a separate ground and test devices instruction bulletin.

© 1996 Square D All Rights Reserved

SECTION 10—OUTLINE

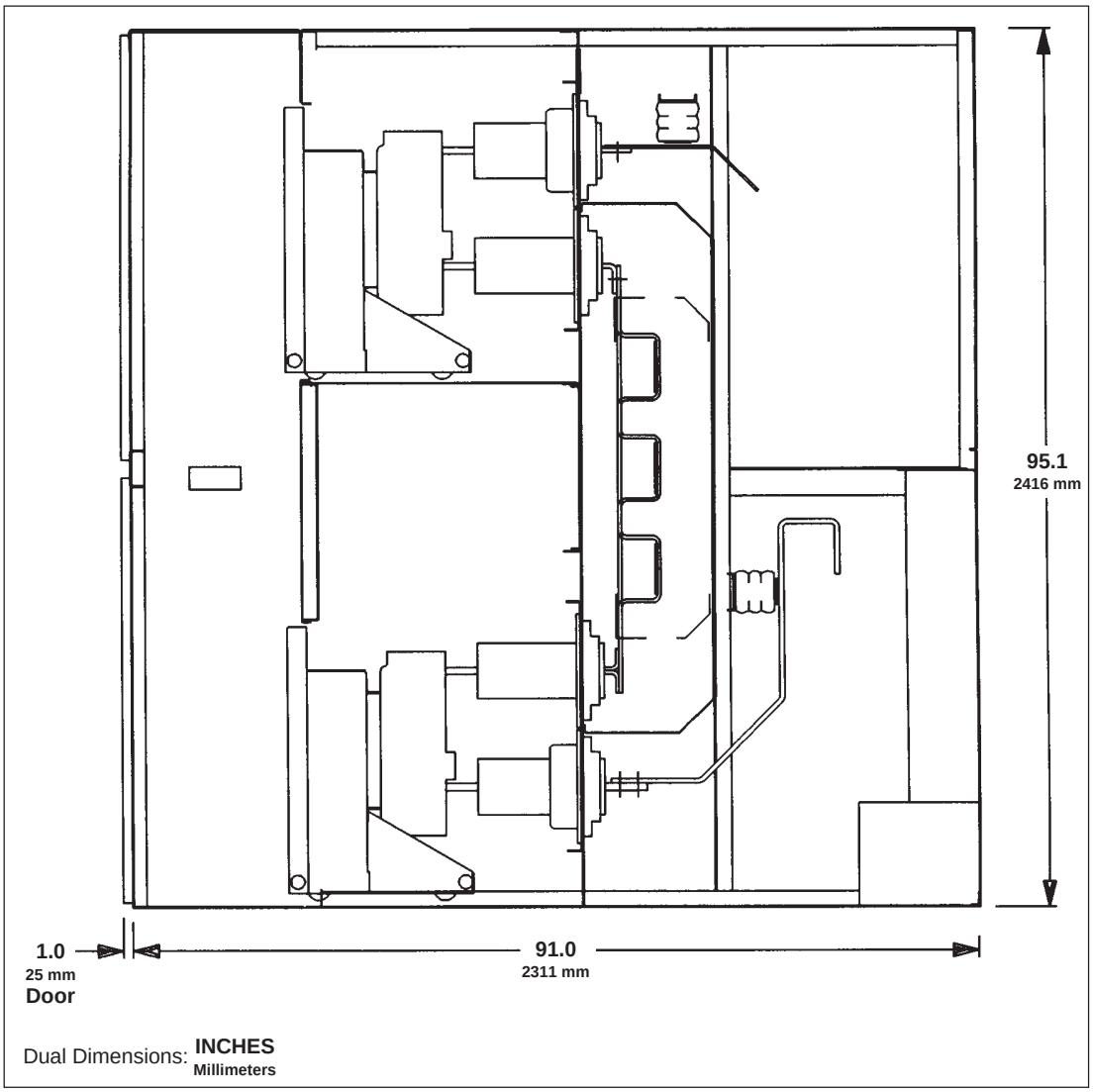

Figure 32: MASTERCLAD indoor switchgear outline

© 1996 Square D All Rights Reserved

SECTION 11—INSTALLATION AND MAINTENANCE LOG

© 1996 Square D All Rights Reserved

© 1996 Square D All Rights Reserved

© 1996 Square D All Rights Reserved

Square D Company
330 Weakley Road
Smyrna, TN 37167 USA

SQUARE D

Bulletin No. 6055-30

Printed in USA