Bitronics

PowerPlex

Modbus Plus™ Interface Option Manual

August 7, 2009
ML0003 Document Revision B
© 2009 by Bitronics, LLC

-S500 (formerly DOS50) Modbus Plus Protocol
Firmware Version 4.00 and Later
Includes Information on CI1 Option (1 Amp Inputs)

NovaTech®
Bitronics ◆ D/3 ◆ Orion

TABLE OF CONTENTS

TABLE OF CONTENTS i
CERTIFICATION ii
INSTALLATION AND MAINTENANCE ii
WARRANTY AND ASSISTANCE ii
COPYRIGHT iii
TRADEMARKS iii

1.0 DESCRIPTION 1
1.1 Introduction 1
1.2 Features 1
1.3 Specifications 1

2.0 PRINCIPLES OF OPERATION 4
2.1 Construction 4
2.2 Output Connector Board 4
2.3 Modbus Plus PEER Processor Board 4

3.0 MODBUS PLUS INTERFACE 5
3.1 Description 5
3.2 PowerPlex Modbus Plus Implementation 6
3.3 Modbus Plus Routing Address 6
3.4 Transaction Timing 7
3.5 Data Format 8
3.5.1 Instantaneous Registers 2½ or 3 Elem 10
3.5.2 Demand Registers 2½ or 3 Elem 13
3.5.3 RTH Summary Registers 2½ or 3 Elem 14
3.5.4 RTH Individual Registers 2½ or 3 Elem 16
3.5.5 RTS Registers 2½ Element Mode 17
3.5.6 Instantaneous Registers 2 Elem 18
3.5.7 Demand Registers 2 Elem 21
3.5.8 RTH Summary Registers 2 Elem 23
3.5.9 RTH Individual Registers 2 Elem 24
3.5.10 RTS Registers 2 Element Mode 25
3.6 Writeable Registers 26
3.6.1 Setting CT & PT Ratios 26
3.6.2 Resetting Energy & Demand 26
3.6.3 TDD Writeable Denominators 27
3.6.4 Display Screen Configuration Registers 28
3.6.5 Configuration Registers 28
3.6.6 Tag Register 28
3.7 Converting Data to Engineering Units 29
3.8 Health Check 31
3.9 Diagnostic LED 33
3.10 Heartbeat State Counter 34
3.11 Meter ID Register 35

4.0 INSTALLATION 35
4.1 Setting Modbus Plus Address 35
4.2 Modbus Plus Cable 36

 Copyright 2009 Bitronics, LLC

CERTIFICATION

Bitronics, LLC certifies that the calibration of its products are based on measurements using equipment whose calibration is traceable to the United States National Institute of Standards Technology (NIST).

INSTALLATION AND MAINTENANCE

Bitronics' products are designed for ease of installation and maintenance. As with any product of this nature, however, such installation and maintenance can present electrical hazards and should only be performed by properly trained and qualified personnel. If the equipment is used in a manner not specified by Bitronics, the protection provided by the equipment may be impaired.

WARRANTY AND ASSISTANCE

Products manufactured by Bitronics, LLC are warranted against defects in materials and workmanship for a period of thirty-six (36) months from the date of their original shipment from the factory. Products repaired at the factory are likewise warranted for eighteen (18) months from the date the repaired product is shipped, or for the remainder of the product's original Warranty, whichever is greater. Obligation under this warranty is limited to repairing or replacing, at Bitronics' factory, any part or parts which Bitronics' examination shows to be defective. Warranties only apply to products subject to normal use and service. There are no warranties, obligations, liabilities for consequential damages, or other liabilities on the part of Bitronics except this Warranty covering the repair of defective materials. The warranties of merchantability and fitness for a particular purpose are expressly excluded.

For assistance, contact Bitronics LLC at:

Telephone: 610.997.5100
Fax: 610.997.5450
Email: bitronics@novatechps.com
Website: www.novatechweb.com/bitronics

Shipping:

261 Brodhead Road
Bethlehem, PA 18017-8698
USA

 Copyright 2009 Bitronics, LLC

COPYRIGHT NOTICE

This manual is copyrighted and all rights are reserved. The distribution and sale of this manual are intended for the use of the original purchaser or his agents. This document may not, in whole or part, be copied, photocopied, reproduced, translated or reduced to any electronic medium or machine-readable form without prior consent of Bitronics, LLC except for use by the original purchaser.

The product described by this manual contains hardware and software that is protected by copyrights owned by one or more of the following entities:

Bitronics, LLC, 261 Brodhead Road, Bethlehem, PA 18017;
Phar Lap Software, Inc., 60 Aberdeen Ave., Cambridge, MA 02138;
Sisco, Inc., 6605 19½ Mile Road, Sterling Heights, MI 48314-1408;
General Software, Inc., Box 2571, Redmond, WA 98073;
Schneider Automation, Inc., One High Street, North Andover, MA 01845;
Triangle MicroWorks, Inc., 2213 Middlefield Court, Raleigh, NC 27615

TRADEMARKS

The following are trademarks or registered trademarks of Bitronics, Inc.:
Bitronics the Bi logo PowerPlex Triplex Triple-II
PowerServe MultiCOMM SubCycleStuf SubCycle Technology

The following are trademarks or registered trademarks of the DNP User's Group:
DNP DNP 3

The following are trademarks or registered trademarks of Schneider Automation, Inc.:
MODSOFT Modicon Modbus Plus Modbus 984
Compact 984 PLC

The following are trademarks or registered trademarks of Phar Lap Software, Inc.:
Phar Lap the Phar Lap logo

The following are trademarks or registered trademarks of Systems Integration Specialists Company, Inc. (SISCO):
SISCO MMS-EASE Lite AX-S4MMS

The following are trademarks or registered trademarks of General Software, Inc.:
General Software the GS logo EMBEDDED BIOS
Embedded DOS

1.0 DESCRIPTION

1.1 Introduction

The Modbus Plus [1] protocol option for the PowerPlex family of transducers is designed to allow operation of these transducers on MODBUS PLUS networks. The PowerPlex transducers are MODICON certified, and can connect directly to MODBUS PLUS networks. The MODBUS PLUS protocol is a high speed peer to peer token passing network designed by Modicon. The MODBUS PLUS network allows a wide variety of devices and topologies.

1.2 Features

* Rugged Bitronics design
* Dedicated communications processor: fast response for maximum instrument polling rates.
* User selectable instrument address
* MODBUS PLUS network status/diagnostic LED visible from front panel
* Simple command to read any number of instrument quantities
* Simple energy and demand reset commands
* Data available through HOLDING REGISTER READ or GLOBAL DATA
* MODICON Certified
* Remote setup of CT and PT ratios.

1.3 Specifications

Resolution:

Amperes:	0.1% of 5* A nominal
Volts:	0.07% of 120V nominal
Frequency:	0.01 Hz

* - When CT1 Option (1Amp Input) is installed, divide this value by 5

[1] - MODICON® and MODBUS PLUS™ are registered trademarks of Schneider, Inc.

 Copyright 2009 Bitronics, LLC

1.3 Specifications, Cont'd

Watts/VARs/VAs:

Per Phase: 0.1% of 500* secondary Watts nominal
Total: 0.1% of 1500* secondary Watts nominal (2 ½ or 3 ELEMENT)
0.1% of 1000* secondary Watts nominal (2 ELEMENT)

Power Factor: 0.001
Phase Angle: 0.1° (MTWIN4B only)
K Factor: 0.01
TDD, THD: 0.1%

Accuracy: Same as base transducer (0.25% Class per ANSI Std 460-1988)

Modbus Plus

Connector: 9-pin D-connector for shielded twisted pair Modbus Plus

Communication: Modbus Plus 1 Megabit per second

Distance: 1,500 ft (450m) per section, 6,000 ft (1800m) with repeaters

Functions: Global Data and Read Holding Registers (FUNC 3)
Preset Single Register (FUNC 6) and Preset Multiple Register (FUNC 16) for writing Energy/Demand RESET and CT/PT Ratios

Response Time:

Model	Response Time MAX (TYP)	Global Data Updated	All 8 Task Paths Serviced MAX
MTWIN_	650ms (300ms)	600ms	650ms
MTWDN_	650ms (300ms)	600ms	650ms
MTWIN_B	150ms (75ms)	100ms[1]	150ms
MTWDN_B	200ms (100ms)	150ms[1]	200ms

[1] - No READ or WRITE requests and input 56Hz to 75Hz, otherwise use Max Response Time

Addressability: Modbus Plus Device Node Addresses 1 .. 64
Task Path Addresses 1 .. 8

Mode: Host Device (must specify task path in routing address)

 Copyright 2009 Bitronics, LLC

EEPROM Memory Endurance:

Writeable Registers: 1,000,000 minimum changes per register (Register Writes)

* - When CT1 Option (1Amp Input) is installed, divide this value by 5

 Copyright 2009 Bitronics, LLC

2.0 PRINCIPLES OF OPERATION

2.1 Construction

The Bitronics PowerPlex Transducer Modbus Plus Option is composed of two major sections. The Modbus Plus network connects to the output connector board which in turn is driven by the by the Modbus Plus Peer processor, which is controlled by the Modbus Plus Interface Processor.

2.2 Output Connector Board

The Modbus Plus network connection is made via the DB-9 connector on the front of the transducer. An EARTH GROUND connection is provided on the front of the unit, by the power input. This EARTH GROUND connection is required for proper Modbus Plus operation, and should be connected to a good earth ground. Both the DB9 and the Earth Ground input are connected to the Modbus Plus Connector Board, which also contains transformer and capacitive isolation of the meter from the actual Modbus Plus cable. The shield of the Modbus Plus cable is connected to the EARTH GROUND terminal through a transient protection network. A ribbon cable connects this board with the Modbus Plus Network Interface Board (see Figure 3 for schematic).

2.3 Modbus Plus Network Interface Board

The Modbus Plus Network Interface Board contains an Intel 80C152JA communications controller and its associated circuitry. This processor handles all the token-passing, error detecting, message transaction and other network overhead required by the Modbus Plus network. When the network interface processor receives a Modbus Plus message, it checks if the Modbus Plus ADDRESS is the address of this node. The NODE ADDRESS is set via two 16-position rotary switches SW3 and SW4, which are located on the output connector board (See section 4.1 for instructions on setting the NODE ADDRESS). If the Modbus Plus address matches this node, the peer processor passes the transaction message through the DUAL-PORT RAM to the Main processor. The Main processor then completes the transaction, and sends a response through the DUAL-PORT RAM back to the network interface processor, which then sends the appropriate Modbus Plus message on the network.

The transceiver IC is also located on this board. This IC provides the drive to transmit and receive messages on the Modbus Plus cable. The transceiver is connected to the Modbus Plus Connector Board via a Kapton ribbon cable which plugs into a three pin connector.

Status of the Modbus Plus network at this node is indicated by the Diagnostic Status LED which is visible through the clear cover on the front panel of the transducer. Section 3.9 describes the operation of the Diagnostic Status LED.

 Copyright 2009 Bitronics, LLC

3.0 MODBUS PLUS INTERFACE

3.1 Description

The Modbus Plus network is a local area network originally designed for industrial control applications, which has recently been applied to a wide range of utility applications. The network enables programmable controllers, host computers, MMIs and a wide variety of other devices (such as Bitronics PowerPlex transducers and MultiComm instruments) to communicate throughout an industrial plant or substation. The network supports up to 64 addressable node devices at a data rate of 1 million bits per second. Up to 32 devices can connect directly to the network cable (shielded twisted pair) over a length of 1500 feet (450 meters). Repeater devices are used to extend the cable distance to 6000 feet (1800 meters) and up to the full 64 node devices.

The network is a physical bus - all nodes are attached to a piece of cable. At each end of the cable must be a terminator. This terminator prevents unwanted electrical reflections of the signal sent on the network cable. Modicon sells Modbus Plus cable connectors that come in two types. Inline connectors are dark grey in color and are used in the middle of a Modbus Plus network cable. Special terminating connectors that are light grey contain the terminator, and are used at both ends of the Modbus Plus cable.

Multiple Modbus Plus networks can be joined through Bridge Plus or similar devices. Messages originating at a node on one network can be routed through one or more bridges to a destination node on another network. Data is passed through bridges to other networks only when needed.

Logically, the network is a ring, a token ring to be more specific. Network nodes are identified by addresses assigned by the user. Each node's address is independent of its physical site location. Addresses are within the range of 1 to 64 decimal, and do not have to be sequential. Duplicate addresses are not allowed.

Network nodes function as peer members of a logical ring, gaining access to the network upon receipt of a token frame. The token is a grouping of bits that is passed in a rotating address sequence from one node to another. Where multiple networks are joined by a bridge or bridges, the token is not passed through the bridge device. Each network maintains its own token rotation sequence independently of the other networks.

While holding the token, a node initiates message transactions with other nodes. Each message contains routing fields that define the source and destination, including its routing path through bridges to the final destination node on a remote network.

When passing the token, a node can write into a global database that is broadcast to all nodes on the network. Each node has a maximum of 32 global registers (16 bits each) that it can write. Global data is transmitted as a field within the token frame. Other nodes monitor the token pass and can extract the global data. Each node therefore maintains its own copy of the global database (64 nodes x 32 global registers/node) which allows for rapid updating of alarms, set points and other data. Each network maintains its own unique global database, as the token is not passed through a bridge

 Copyright 2009 Bitronics, LLC

to another network.

For more information, the manual "MODICON MODBUS PLUS NETWORK PLANNING AND INSTALLATION GUIDE" (GM-MBPL-001) may be purchased for a nominal fee directly from Modicon Inc.

3.2 PowerPlex Modbus Plus Implementation

The Modbus Plus implementation in the PowerPlex transducer conforms to all the standard Modbus Plus specifications and capabilities, such as maximum nodes, distance, signal sensitivity, etc. The PowerPlex transducer is classified as a HOST-BASED DEVICE in the Modbus Plus structure. Of the 44 data items (70 data items in transducers with demand measurements, 341 data items in transducers with demand and harmonics measurements) that are available from the PowerPlex transducer, 27 (31 in “B” Versions) can be obtained over the Modbus Plus Network via GLOBAL DATA. Global Data is a common data base shared by all nodes on a MODBUS PLUS network. Any of the 44 (70 on transducers with demand measurements, 341 data items in transducers with demand and harmonics measurements) can be read directly by issuing a READ HOLDING REGISTERS command from the requesting node.

3.3 Modbus Plus Routing Address

The MODBUS PLUS routing address is 5 bytes long. This allows for communications over one or more Bridge Plus devices that connect two separate MODBUS PLUS networks together. Because the PowerPlex transducer is a HOST-BASED DEVICE, the Modbus Plus address must contain two routing addresses. The next-to-last NON-ZERO byte is the **PHYSICAL ADDRESS (1-64)** of the meter. The last NON-ZERO byte in the routing field is the **TASK PATH NUMBER (1-8)** inside the instrument. If you are familiar with addressing MODICON's PLCs, you will notice that the routing path is slightly different. When addressing PLCs it is not necessary to specify a task path number in the routing field. This is because the task path number is automatically selected inside a PLC designated device. In a HOST designated device, the task path number is NOT automatically selected, so it is necessary to specify it in the routing address field. Since the address of the meter and the task number each require 1 byte of information, the remaining 3 bytes allow for communications through one, two or three Bridge Plus devices.

Example 1: Communications to a node on the same network.
42.4.0.0.0 Transducer address #42, task path #4

Example 2: Communications to a node on another MODBUS PLUS network connected by one Bridge Plus device.
33.42.4.0.0 Bridge address #33 on local network, Transducer address #42, task path #4

 Copyright 2009 Bitronics, LLC

Example 3: Communications to a node on another MODBUS PLUS network connected by three Bridge Plus devices.

21.5.63.42.4 1st Bridge address #21 on local network
2nd Bridge address #5 on next network
3rd Bridge address #63 on the subsequent network
Transducer address #42
Task path #4

When reading register(s) of the PowerPlex transducer from different requesting devices, it is recommended to use a different task path number for each of the separate requesting devices. This will prevent contention when the two requesting devices try to read the meter at the same time.

3.4 Transaction Timing

The PowerPlex transducer completes a complete set of calculations approximately every 150 milliseconds (600msec for non "B" Models). At the completion of the calculation the MAIN processor updates the GLOBAL DATA in the NETWORK processor, and then the MAIN processor also services any pending transactions on the eight task paths. All eight tasks are serviced at this time, however they are serviced only once. If a transaction is received on a task path that has just been serviced, that request will be serviced after the next set of calculations are completed (max response time).

Model	Response Time MAX (TYP)	Global Data Updated	All 8 Task Paths Serviced MAX
MTWIN1,2,3	650ms (300ms)	600ms	650ms
MTWDN1,2,3	650ms (300ms)	600ms	650ms
MTWIN1B,2B,3B,4B	150ms (75ms)	100ms[1]	150ms
MTWDN1B,2B,3B	200ms (100ms)	150ms[1]	200ms

[1] - No READ or WRITE requests and input 56Hz to 75Hz, otherwise use Max Response Time.

The Energy, Demand and Harmonic Demand registers can be RESET by writing the appropriate value to Holding Register 40100. The resets and their associated values are listed in Table 1 (see Section 3.2). The Registers will be reset within 0.6 seconds, however it takes the PowerPlex transducer 5 seconds to clear the energy data stored in EEPROM and up to 10 seconds to reset the demand data stored in EEPROM. The USER must ensure that the power is not interrupted to the transducer for this 5 or 10 second period after this command is issued.

The CT/PT Ratio and Divisor Registers (40041-40044), TDD Amps Denominators (40101-40103), Tag Register (40099) and the Display Setup Registers (40092-40096) can be set by writing to the proper register. The registers will be written to EEPROM within 700 milliseconds.

 Copyright 2009 Bitronics, LLC

3.5 Data Format

The PowerPlex transducer contains a set of holding registers (4XXXX) into which the instrument places values that correspond to the measurements the instrument is making. These holding registers can be read by any other device on the network using a READ HOLDING REGISTER or READ DATA command.

The PowerPlex transducer also writes 27 words of data (31 words for any “B” version) to the Modbus Plus GLOBAL DATA SPACE. Every node on this network maintains this data in its own memory. The global data is accessed by using the MSTR function block (in a PLC). Users of other devices are advised to refer to their specific user's guide to determine how their device handles GLOBAL DATA. GLOBAL DATA is not transmitted across BRIDGES, nor is it transmitted to Modbus devices connected via a BRIDGE-PLUS.

For both GLOBAL DATA and HOLDING REGISTER DATA, the Health Check Register should always be read and checked before interpreting data, since some failure modes will cause erroneous data to be presented (See Section 3.8). Most of the data is represented in **OFFSET BINARY** format, for conversion of the register data into **ENGINEERING UNITS**, please refer to Section 3.7. For specifics concerning the correct command and its implementation, users are directed to the User's manual for the specific device that will request the data. Listed on the following pages are the register assignments for the PowerPlex transducers. The available registers depend upon the particular model of PowerPlex. The registers have been broken down into five blocks, which are shown in Figure 1. These various blocks are listed on the following pages. Table 2 indicates which blocks pertain to which models. The registers are also divided into two sections by Element Mode, 2½ or 3 Element Mode is in the first section, and 2 Element Mode is in the second section. Note that unless otherwise specified, all registers are READ-ONLY.

	Instantaneous	Demand	RTH Summary	RTH Individuals	RTS (Sync)
MTWIN1,2,3,1B,2B,3B	X				
MTWDN1,2,3	X	X			
MTWDN1B,2B,3B	X	X	X	X	
MTWIN4B,5B,6B	X				X

Table 2 - Register Block Assignments

 Copyright 2009 Bitronics, LLC

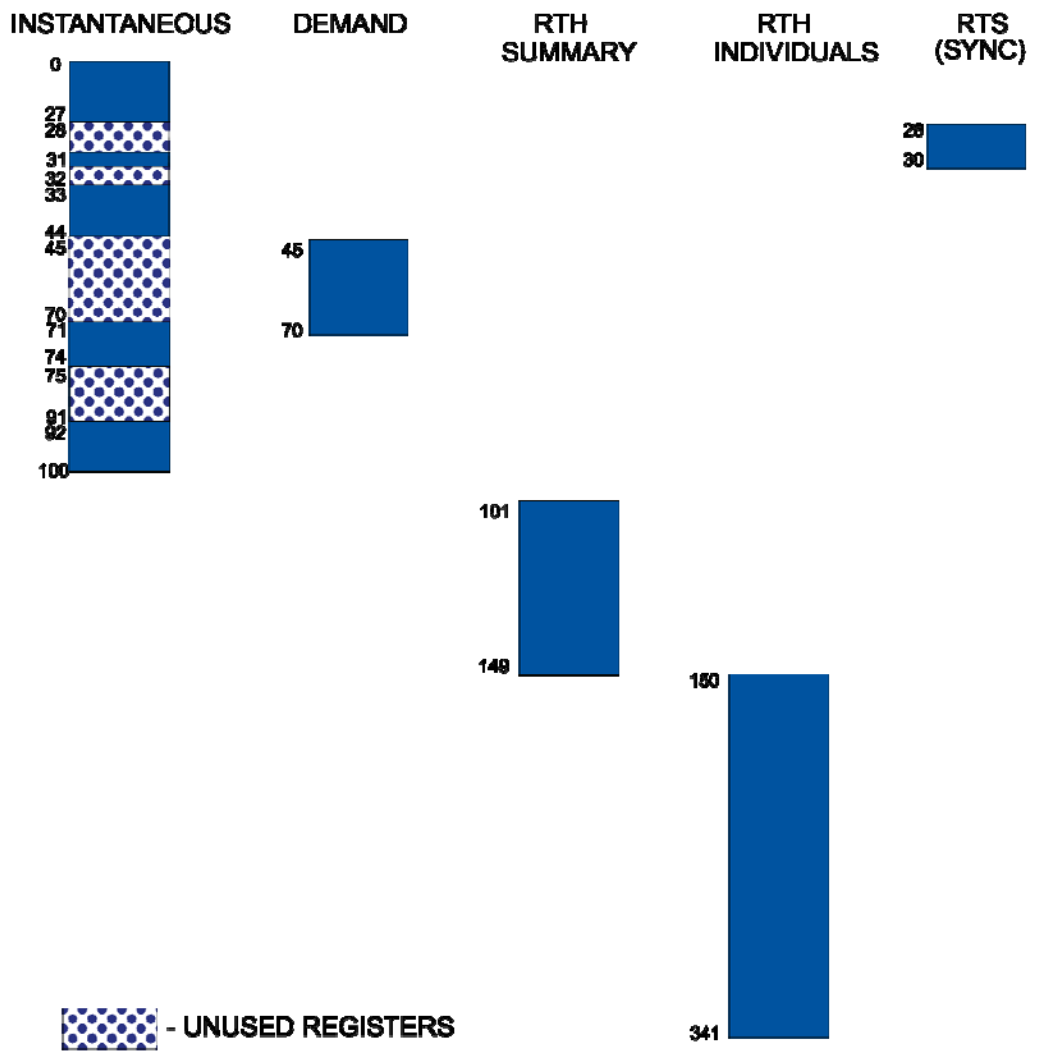

Figure 1 - Register Memory Map

 Copyright 2009 Bitronics, LLC

3.5.1 INSTANTANEOUS Data Registers for 2 ½ or 3 Element Mode

Quantity	Holding Register	Global Register	Representation
Health Check	40001	1	Refer to Section 3.8
Amperes Phase A	40002	2	
Amperes Phase B	40003	3	2047 = 0Amps; 4095 = 10.0*Amps
Amperes Phase C	40004	4	
Volts Phase A-N	40005	5	
Volts Phase B-N	40006	6	2047 = 0Volts; 4095 = 150.0Volts
Volts Phase C-N	40007	7	
Watts Total 3 Phase	40008	8	0 = -3000*Watts; 2047 = 0Watts; 4095 = +3000*Watts
VARs Total 3 Phase	40009	9	0 = -3000*VARs; 2047 = 0VARs; 4095 = +3000*VARs
Watts Phase A	40010	10	0 = -1000*Watts; 2047 = 0Watts
Watts Phase B	40011	11	4095 = +1000*Watts
Watts Phase C	40012	12	
VARs Phase A	40013	13	0 = -1000*VARs; 2047 = 0VARs
VARs Phase B	40014	14	4095 = +1000*VARs
VARs Phase C	40015	15	
CT Ratio	40016	16	Normalized ratio (Does not include decimal point)
PT Ratio	40017	17	500< Ratio <9999 (CT:5) or (CT:1 with CT1 option) 1000 < Ratio < 9999 (PT:1)
Neutral Current	40018	18	2047 = 0Amps; 4095 = 15.0*Amps
+ kWatthour (High)	40019	19	0=0kWh; 9999=99,990,000kWh
+ kWatthour (Low)	40020	20	0=0kWh; 9999=9,999kWh
- kWatthour (High)	40021	21	0=0kWh; 9999=-99,990,000kWh
- kWatthour (Low)	40022	22	0=0kWh; 9999=-9,999kWh
+ kVARhour (High)	40023	23	0=0kVARh; 999=99,990,000kVARh
+ kVARhour (Low)	40024	24	0=0kVARh; 9999=9,999kVARh
- kVARhour (High)	40025	25	0=0kVARh; 99=-99,990,000kVARh
- kVARhour (Low)	40026	26	0=0kVARh; 9999=-9,999kVARh

* - When CT1 Option (1Amp Input) is installed, divide this value by 5

 Copyright 2009 Bitronics, LLC

3.5.1 INSTANTANEOUS Data Registers for 2 ½ or 3 Element Mode (Cont'd)

Quantity	Holding Register	Global Register	Representation
Frequency	40027	27	0 = <45.00Hz; 4500 = 45.00Hz 7500 = 75.00Hz; 9999 =>75.00Hz
Unused	40028	28[2]	Always 2047
Unused	40029	29[2]	
Unused	40030	30[2]	
Unused	40031	31[2]	Always 2047, Except "B" Models See Section 3.10
Unused	40032	N/A	Always 2047
VAs Phase A	40033	N/A	2047 = 0VA; 4095 = 1000*VA
VAs Phase B	40034	N/A	
VAs Phase C	40035	N/A	
VAs Total 3 Phase	40036	N/A	2047 = 0VAs; 4095 = 3000*VAs
PF Phase A	40037	N/A	1047 = -1; 2047 = 0; 3047 = +1 4046 = Amps or Volts too low (-) lagging; (+) leading
PF Phase B	40038	N/A	
PF Phase C	40039	N/A	
PF Total 3 Phase	40040	N/A	1047 = -1; 2047 = 0; 3047 = +1 4046 = Amps or Volts too low (-) lagging; (+) leading
CT Ratio	40041	N/A	Read/Write normalized ratio, copied to 40016
CT Ratio Divisor	40042	N/A	Read/Write; = 1,10,100, or 1000
PT Ratio	40043	N/A	Read/Write normalized ratio, copied to 40017
PT Ratio Divisor	40044	N/A	Read/Write; = 1,10,100, or 1000
Unused	40045-70	N/A	Always 2047

* - When CT1 Option (1Amp Input) is installed, divide this value by 5

[2] "B" Version Instruments Only

 Copyright 2009 Bitronics, LLC

3.5.1 INSTANTANEOUS Data Registers for 2 ½ or 3 Element Mode (Cont'd)

Quantity	Holding Register	Representation
Meter Type Identifier	40071	See **Table 5**
Communications Firmware Rev. Host Firmware Rev. Host Micro Firmware Rev.	40072 40073 40074	Packed BCD XX.XX
Unused	40075-91	Always 2047
Display Screen Setup Register 1 Display Screen Setup Register 2 Display Screen Setup Register 3 Display Screen Setup Register 4 Display Screen Setup Register 5	40092 40093 40094 40095 40096	Read/Write - Future Expansion
Configuration Setup Register 1 Configuration Setup Register 2	40097 40098	Read/Write - Future Expansion Always returns 0
User Writeable Tag Register	40099	Read/Write - 0 to 32,767
Energy RESET	40100	Write ONLY; Bit 0 - See **Table 3**
Unused	40101-103	Always 2047

 Copyright 2009 Bitronics, LLC

3.5.2 DEMAND Data Registers for 2 ½ or 3 Element Mode

Quantity	Holding Register	Representation
Present Demand Amps φA	40045	2047[1] = 0Amps; 4095 = 10.0*Amps
Present Demand Amps φB	40046	
Present Demand Amps φC	40047	
Max Demand Amps φA	40048	2047[1] = 0Amps; 4095 = 10.0*Amps
Max Demand Amps φB	40049	
Max Demand Amps φC	40050	
Present Demand Amps N	40051	2047[1] = 0Amps; 4095 = 15.0*Amps
Max Demand Amps N	40052	2047[1] = 0Amps; 4095 = 15.0*Amps
Present Demand Volts φA	40053	2047[1] = 0Volts; 4095 = 150.0Volts
Present Demand Volts φB	40054	
Present Demand Volts φC	40055	
Max Demand Volts φA	40056	2047[1] = 0Volts; 4095 = 150.0Volts
Max Demand Volts φB	40057	
Max Demand Volts φC	40058	
Min Demand Volts φA	40059	2047[1] = 0Volts; 4095 = 150.0Volts
Min Demand Volts φB	40060	
Min Demand Volts φC	40061	
Present Demand Watts Total	40062	0 = -3000*Watts; 2047[1] = 0Watts
Max Demand Watts Total	40063	4095 = +3000*Watts
Min Demand Watts Total	40064	
Present Demand VARs Total	40065	0 = -3000*VARs; 2047[1] = 0VARs
Max Demand VARs Total	40066	4095 = +3000*VARs
Min Demand VARs Total	40067	
Present Demand VAs Total	40068	2047[1] = 0VAs; 4095 = +3000*VAs
Max Demand VAs Total	40069	
Min Demand VAs Total	40070	
Amp Demand RESET	40100	Read/Write Bit 1 - See **Table 3**
Volt Demand RESET	40100	Read/Write Bit 2 - See **Table 3**
Power Demand RESET	40100	Read/Write Bit 3 - See **Table 3**

* - When CI1 Option (1Amp Input) is installed, divide this value by 5
[1] - MTWINxB models always return the value 2047

 Copyright 2009 Bitronics, LLC

3.5.3 RTH SUMMARY Data Registers for 2 ½ or 3 Element Mode

Quantity	Holding Register	Representation
Amp Demand RESET	40100	Read/Write Bit 1 - See **Table 3**
Volt Demand RESET	40100	Read/Write Bit 2 - See **Table 3**
Power Demand RESET	40100	Read/Write Bit 3 - See **Table 3**
Harmonic Demand RESET	40100	Read/Write Bit 4 - See **Table 3**
TDD Denominator Amps φA	40101	Read/Write 2047[1] = 0Amps;
TDD Denominator Amps φB	40102	4095 = 10.0*Amps. If reg = 2047, then
TDD Denominator Amps φC	40103	Fund Amps will be used (THD)
		Factory Default = 5* Amps Secondary
Fundamental Amps φA	40104	
Fundamental Amps φB	40105	2047 = 0Amps; 4095 = 10.0*Amps
Fundamental Amps φC	40106	
Fundamental Amps Neutral	40107	2047 = 0Amps; 4095 = 15.0*Amps
Fundamental Volts φA	40108	
Fundamental Volts φB	40109	2047 = 0Volts; 4095 = 150.0Volts
Fundamental Volts φC	40110	
TDD[2] Amps φA	40111	
TDD[2] Amps φB	40112	0 = 0.0%; 9999 = 999.9%
TDD[2] Amps φC	40113	Set to 0 on low signal
TDD[2] Odd Amps φA	40114	
TDD[2] Odd Amps φB	40115	0 = 0.0%; 9999 = 999.9%
TDD[2] Odd Amps φC	40116	Set to 0 on low signal
TDD[2] Even Amps φA	40117	
TDD[2] Even Amps φB	40118	0 = 0.0%; 9999 = 999.9%
TDD[2] Even Amps φC	40119	Set to 0 on low signal
THD Volts φA	40120	
THD Volts φB	40121	0 = 0.0%; 9999 = 999.9%
THD Volts φC	40122	Set to 0 on low signal
THD Odd Volts φA	40123	
THD Odd Volts φB	40124	0 = 0.0%; 9999 = 999.9%
THD Odd Volts φC	40125	Set to 0 on low signal
THD Even Volts φA	40126	
THD Even Volts φB	40127	0 = 0.0%; 9999 = 999.9%
THD Even Volts φC	40128	Set to 0 on low signal

* - When CI1 Option (1Amp Input) is installed, divide this value by 5

[1] - MTWINxB models always return the value 2047

[2] - If TDD Denominator is set to 2047 (0Amps) the TDD calculation will use Fundamental Amps as the Denominator, which will result in all Current Distortions being expressed as THD.

 Copyright 2009 Bitronics, LLC

3.5.3 RTH SUMMARY Data Registers for 2 ½ or 3 Element Mode (Cont'd)

Quantity	Holding Register	Representation
K-Factor Amps φA	40129	100 = 1.00; 65,535 = 655.35
K-Factor Amps φB	40130	
K-Factor Amps φC	40131	Set to 100 on low signal
Displacement PF φA	40132	1047 = -1; 2047 = 0; 3047 = +1
Displacement PF φB	40133	4046 = Amps or Volts too low
Displacement PF φC	40134	(-) lagging; (+) leading
Displacement PF Total	40135	1047 = -1; 2047 = 0; 3047 = +1 4046 = Amps or Volts too low (-) lagging; (+) leading
Present Demand Fund. Amps N	40136	2047 = 0Amps; 4095 = 15.0*Amps
Max Demand Fund. Amps N	40137	2047 = 0Amps; 4095 = 15.0*Amps
Present Demand TDD[1] Amps φA	40138	0 = 0.0%; 9999 = 999.9%
Present Demand TDD[1] Amps φB	40139	
Present Demand TDD[1] Amps φC	40140	
Max Demand TDD[1] Amps φA	40141	0 = 0.0%; 9999 = 999.9%
Max Demand TDD[1] Amps φB	40142	
Max Demand TDD[1] Amps φC	40143	
Present Demand THD Volts φA	40144	0 = 0.0%; 9999 = 999.9%
Present Demand THD Volts φB	40145	
Present Demand THD Volts φC	40146	
Max Demand THD Volts φA	40147	0 = 0.0%; 9999 = 999.9%
Max Demand THD Volts φB	40148	
Max Demand THD Volts φC	40149	

* - When CT1 Option (1Amp Input) is installed, divide this value by 5

[1] If TDD Denominator is set to 2047 (0Amps) the TDD calculation will use Fundamental Amps as the Denominator, which will result in all Current Distortions being expressed as THD.

 Copyright 2009 Bitronics, LLC

3.5.4 RTH INDIVIDUAL Data Registers for 2 ½ or 3 Element Mode

Quantity	Holding Register	Representation
φA Amps Distortion Denominator	40150	2047 = 0Amps; 4095 = 10.0*Amps =40101 if TDD, =40104 if THD
φA Amps Demand Distortion[1] - I_1	40151	0 = 0.0%; 9999 = 999.9% Set to 0 on low signal
φA Amps Demand Distortion[1] - I_2	40152	
:		
:		
φA Amps Demand Distortion[1] - I_{30}	40180	
φA Amps Demand Distortion[1] - I_{31}	40181	
φA Volts Distortion Denominator	40182	2047 = 0Volts; 4095 = 150.0Volts =40108
φA Volts Harm. Distortion - V_1	40183	0 = 0.0%; 9999 = 999.9% Set to 0 on low signal
φA Volts Harm. Distortion - V_2	40184	
:		
:		
φA Volts Harm. Distortion - V_{30}	40212	
φA Volts Harm. Distortion - V_{31}	40213	
φB Amps Distortion Denominator	40214	2047 = 0Amps; 4095 = 10.0*Amps =40102 if TDD, =40105 if THD
φB Amps Demand Distortion[1] - I_1	40215	0 = 0.0%; 9999 = 999.9% Set to 0 on low signal
φB Amps Demand Distortion[1] - I_2	40216	
:		
:		
φB Amps Demand Distortion[1] - I_{30}	40244	
φB Amps Demand Distortion[1] - I_{31}	40245	
φB Volts Distortion Denominator	40246	2047 = 0Volts; 4095 = 150.0Volts =40109
φB Volts Harm. Distortion - V_1	40247	0 = 0.0%; 9999 = 999.9% Set to 0 on low signal
φB Volts Harm. Distortion - V_2	40248	
:		
:		
φB Volts Harm. Distortion - V_{30}	40276	
φB Volts Harm. Distortion - V_{31}	40277	

* - When CT1 Option (1Amp Input) is installed, divide this value by 5

[1] If TDD Denominator is set to 2047 (0Amps) the TDD calculation will use Fundamental Amps as the Denominator, which will result in all Current Distortions being expressed as THD.

 Copyright 2009 Bitronics, LLC

3.5.4 RTH INDIVIDUAL Data Registers for 2 ½ or 3 Element Mode (Cont'd)

Quantity	Holding Register	Representation
φC Amps Distortion Denominator	40278	| 2047 = 0Amps; 4095 = 10.0*Amps | =40103 if TDD, =40106 if THD
φC Amps Demand Distortion[1] - I_1 φC Amps Demand Distortion[1] - I_2 : : :: φC Amps Demand Distortion[1] - I_{30} φC Amps Demand Distortion[1] - I_{31}	40279 40280 40308 40309	| | | 0 = 0.0%; 9999 = 999.9% | Set to 0 on low signal | |
φC Volts Distortion Denominator	40310	| 2047 = 0Volts; 4095 = 150.0Volts | =40110
φC Volts Harm. Distortion - V_1 φC Volts Harm. Distortion - V_2 : :: φC Volts Harm. Distortion - V_{30} φC Volts Harm. Distortion - V_{31}	40311 40312 40340 40341	| | | 0 = 0.0%; 9999 = 999.9% | Set to 0 on low signal | |

* - When CT1 Option (1Amp Input) is installed, divide this value by 5

[1] If TDD Denominator is set to 2047 (0Amps) the TDD calculation will use Fundamental Amps as the Denominator, which will result in all Current Distortions being expressed as THD.

3.5.5 RTS Data Registers for 2 ½ Element Mode

Quantity	Holding Register	Global Register	Representation
Reference Volts[2] Phase Φ[3]-N	40028	28	2047 = 0Volts; 4095 = 150.0Volts
Phase Difference[2]	40029	29	247 = -180.0°; 2047 = 0°; 3847 = +180.0° (+ indicates that the Line Φ[3]-N voltage is LEADING the Reference Φ[3]-N voltage)
Reference Frequency[2]	40030	30	0 = <45.00Hz; 4500 = 45.00Hz 7500 = 75.00Hz; 9999 =>75.00Hz
Heartbeat State Counter	40031	31	See Section 3.10

[2] Registers 40028,29 & 30 are available on PowerPlex RTS (MTWIN4B/5B/6B) ONLY. All other instruments do not use these registers, and return a value of 2047.
[3] MTWIN4B Φ =A, MTWIN5B Φ =B, MTWIN6B Φ =C

 Copyright 2009 Bitronics, LLC

3.5.6 INSTANTANEOUS Data Registers for 2 Element Mode

Quantity	Holding Register	Global Register	Representation
Health Check	40001	1	Refer to Section 3.8
Amperes Phase A	40002	2	2047 = 0Amps; 4095 = 10.0*Amps
Amperes Phase B	40003	3	
Amperes Phase C	40004	4	
Volts Phase A-B	40005	5	2047 = 0Volts; 4095 = 150.0Volts
Volts Phase B-C	40006	6	
Volts Phase C-A	40007	7	
Watts Total 3 Phase	40008	8	0 = -2000*Watts; 2047 = 0Watts; 4095 = +2000*Watts
VARs Total 3 Phase	40009	9	0 = -2000*VARs; 2047 = 0VARs; 4095 = +2000*VARs
Unused	40010	10	Always 2047
Unused	40011	11	
Unused	40012	12	
Unused	40013	13	Always 2047
Unused	40014	14	
Unused	40015	15	
CT Ratio	40016	16	Normalized ratio (Does not include decimal point) 500< Ratio <9999 (CT:5) or (CT:1 with CT1 option) 1000 < Ratio < 9999 (PT:1)
PT Ratio	40017	17	
Unused	40018	18	Always 2047
+ kWatthour (High)	40019	19	0=0kWh; 9999=99,990,000kWh
+ kWatthour (Low)	40020	20	0=0kWh; 9999=9,999kWh
- kWatthour (High)	40021	21	0=0kWh; 9999=-99,990,000kWh
- kWatthour (Low)	40022	22	0=0kWh; 9999=-9,999kWh
+ kVARhour (High)	40023	23	0=0kVARh;9999=99,990,000kVARh
+ kVARhour (Low)	40024	24	0=0kVARh; 9999=9,999kVARh
- kVARhour (High)	40025	25	0=0kVARh; 9999=-99,990,000kVARh
- kVARhour (Low)	40026	26	0=0kVARh; 9999=-9,999kVARh

* - When CT1 Option (1Amp Input) is installed, divide this value by 5

 Copyright 2009 Bitronics, LLC

3.5.6 INSTANTANEOUS Data Registers for 2 Element Mode (Cont'd)

Quantity	Holding Register	Global Register	Representation
Frequency	40027	27	0 = <45.00Hz; 4500 = 45.00Hz 7500 = 75.00Hz; 9999 =>75.00Hz
Unused	40028	28[3]	|
Unused	40029	29[3]	| Always 2047
Unused	40030	30[3]	|
Unused	40031	31[3]	| Always 2047, Except "B" Models See Section 3.10
Unused	40032	N/A	|
Unused	40033	N/A	| Always 2047
Unused	40034	N/A	|
Unused	40035	N/A	|
VAs Total 3 Phase	40036	N/A	2047 = 0VAs; 4095 = 2000*VAs
Unused	40037	N/A	|
Unused	40038	N/A	| Always 2047
Unused	40039	N/A	|
PF Total 3 Phase	40040	N/A	1047 = -1; 2047 = 0; 3047 = +1 4046 = Amps or Volts too low (-) lagging; (+) leading
CT Ratio	40041	N/A	Read/Write normalized ratio, copied to 40016
CT Ratio Divisor	40042	N/A	Read/Write; = 1,10,100, or 1000
PT Ratio	40043	N/A	Read/Write normalized ratio, copied to 40017
PT Ratio Divisor	40044	N/A	Read/Write; = 1,10,100, or 1000
Unused	40045-70	N/A	Always 2047

* - When CT1 Option (1Amp Input) is installed, divide this value by 5

[3] "B" Version Instruments Only

 Copyright 2009 Bitronics, LLC

3.5.6 INSTANTANEOUS Data Registers for 2 Element Mode (Cont'd)

Quantity	Holding Register	Representation
Meter Type Identifier	40071	See **Table 5**
Communications Firmware Rev.	40072	|
Host Firmware Rev.	40073	| Packed BCD XX.XX
Host Micro Firmware Rev.	40074	|
Unused	40075-91	Always 2047
Display Screen Setup Register 1	40092	|
Display Screen Setup Register 2	40093	|
Display Screen Setup Register 3	40094	| Read/Write - Future Expansion
Display Screen Setup Register 4	40095	|
Display Screen Setup Register 5	40096	|
Configuration Setup Register 1	40097	| Read/Write - Future Expansion
Configuration Setup Register 2	40098	| Always returns 0
User Writeable Tag Register	40099	Read/Write - 0 to 32,767
Energy RESET	40100	Write ONLY; Bit 0 - See **Table 3**
Unused	40101-103	Always 2047

 Copyright 2009 Bitronics, LLC

3.5.7 DEMAND Data Registers for 2 Element Mode

Quantity	Holding Register	Representation
Present Demand Amps φA	40045	2047[1] = 0Amps; 4095 = 10.0[*]Amps
Present Demand Amps φB	40046	
Present Demand Amps φC	40047	
Max Demand Amps φA	40048	2047[1] = 0Amps; 4095 = 10.0[*]Amps
Max Demand Amps φB	40049	
Max Demand Amps φC	40050	
Unused	40051	Always 2047[1]
Unused	40052	Always 2047[1]
Present Demand Volts φA-B	40053	2047[1] = 0Volts; 4095 = 150.0Volts
Present Demand Volts φB-C	40054	
Present Demand Volts φC-A	40055	
Max Demand Volts φA-B	40056	2047[1] = 0Volts; 4095 = 150.0Volts
Max Demand Volts φB-C	40057	
Max Demand Volts φC-A	40058	
Min Demand Volts φA-B	40059	2047[1] = 0Volts; 4095 = 150.0Volts
Min Demand Volts φB-C	40060	
Min Demand Volts φC-A	40061	
Present Demand Watts Total	40062	0 = -2000[*]Watts; 2047[1] = 0Watts
Max Demand Watts Total	40063	4095 = +2000[*]Watts
Min Demand Watts Total	40064	
Present Demand VARs Total	40065	0 = -2000[*]VARs; 2047[1] = 0VARs
Max Demand VARs Total	40066	4095 = +2000[*]VARs
Min Demand VARs Total	40067	
Present Demand VAs Total	40068	2047[1] = 0VAs; 4095 = +2000[*]VAs
Max Demand VAs Total	40069	
Min Demand VAs Total	40070	
Amp Demand RESET	40100	Read/Write Bit 1 - See **Table 3**
Volt Demand RESET	40100	Read/Write Bit 2 - See **Table 3**
Power Demand RESET	40100	Read/Write Bit 3 - See **Table 3**

[*] - When CI1 Option (1Amp Input) is installed, divide this value by 5
[1] - MTWIExB models always return the value 2047

 Copyright 2009 Bitronics, LLC

3.5.8 RTH SUMMARY Data Registers for 2 Element Mode

Quantity	Holding Register	Representation
Amp Demand RESET	40100	Read/Write Bit 1 - See **Table 3**
Volt Demand RESET	40100	Read/Write Bit 2 - See **Table 3**
Power Demand RESET	40100	Read/Write Bit 3 - See **Table 3**
Harmonic Demand RESET	40100	Read/Write Bit 4 - See **Table 3**
TDD Denominator Amps φA	40101	| Read/Write 2047[1] = 0Amps;
TDD Denominator Amps φB	40102	| 4095 = 10.0[*]Amps. If reg = 2047, then
TDD Denominator Amps φC	40103	| Fund Amps will be used (THD)
		| Factory Default = 5[*] Amps Secondary
Fundamental Amps φA	40104	|
Fundamental Amps φB	40105	| 2047 = 0Amps; 4095 = 10.0[*]Amps
Fundamental Amps φC	40106	|
Unused	40107	Always 2047
Fundamental Volts φA-B	40108	|
Fundamental Volts φB-C	40109	| 2047 = 0Volts; 4095 = 150.0Volts
Fundamental Volts φC-A	40110	|
TDD[2] Amps φA	40111	|
TDD[2] Amps φB	40112	| 0 = 0.0%; 9999 = 999.9%
TDD[2] Amps φC	40113	| Set to 0 on low signal
TDD[2] Odd Amps φA	40114	|
TDD[2] Odd Amps φB	40115	| 0 = 0.0%; 9999 = 999.9%
TDD[2] Odd Amps φC	40116	| Set to 0 on low signal
TDD[2] Even Amps φA	40117	|
TDD[2] Even Amps φB	40118	| 0 = 0.0%; 9999 = 999.9%
TDD[2] Even Amps φC	40119	| Set to 0 on low signal
THD Volts φA-B	40120	|
THD Volts φB-C	40121	| 0 = 0.0%; 9999 = 999.9%
THD Volts φC-A	40122	| Set to 0 on low signal
THD Odd Volts φA-B	40123	|
THD Odd Volts φB-C	40124	| 0 = 0.0%; 9999 = 999.9%
THD Odd Volts φC-A	40125	| Set to 0 on low signal
THD Even Volts φA-B	40126	|
THD Even Volts φB-C	40127	| 0 = 0.0%; 9999 = 999.9%
THD Even Volts φC-A	40128	| Set to 0 on low signal

[*] - When CI1 Option (1Amp Input) is installed, divide this value by 5
[1] - MTWINxB models always return the value 2047
[2] If TDD Denominator is set to 2047 (0Amps) the TDD calculation will use Fundamental Amps as the Denominator, which will result in all Current Distortions being expressed as THD.

 Copyright 2009 Bitronics, LLC

3.5.8 RTH SUMMARY Data Registers for 2 Element Mode (Cont'd)

Quantity	Holding Register	Representation
K-Factor Amps φA	40129	100 = 1.00; 65,535 = 655.35 Set to 100 on low signal
K-Factor Amps φB	40130	
K-Factor Amps φC	40131	
Unused	40132	Always 2047
Unused	40133	
Unused	40134	
Displacement PF Total	40135	1047 = -1; 2047 = 0; 3047 = +1 4046 = Amps or Volts too low (-) lagging; (+) leading
Unused	40136	Always 2047
Unused	40137	
Present Demand TDD[1] Amps φA	40138	0 = 0.0%; 9999 = 999.9%
Present Demand TDD[1] Amps φB	40139	
Present Demand TDD[1] Amps φC	40140	
Max Demand TDD[1] Amps φA	40141	0 = 0.0%; 9999 = 999.9%
Max Demand TDD[1] Amps φB	40142	
Max Demand TDD[1] Amps φC	40143	
Present Demand THD Volts φA-B	40144	0 = 0.0%; 9999 = 999.9%
Present Demand THD Volts φB-C	40145	
Present Demand THD Volts φC-A	40146	
Max Demand THD Volts φA-B	40147	0 = 0.0%; 9999 = 999.9%
Max Demand THD Volts φB-C	40148	
Max Demand THD Volts φC-A	40149	

[*] - When CT1 Option (1Amp Input) is installed, divide this value by 5

[1] If TDD Denominator is set to 2047 (0Amps) the TDD calculation will use Fundamental Amps as the Denominator, which will result in all Current Distortions being expressed as THD.

 Copyright 2009 Bitronics, LLC

3.5.9 RTH INDIVIDUAL Data Registers for 2 Element Mode

Quantity	Holding Register	Representation
φA Amps Distortion Denominator	40150	| 2047 = 0Amps; 4095 = 10.0*Amps | =40101 if TDD, =40104 if THD
φA Amps Demand Distortion[1] - I_1	40151	|
φA Amps Demand Distortion[1] - I_2	40152	|
: :		| 0 = 0.0%; 9999 = 999.9%
: :		| Set to 0 on low signal
φA Amps Demand Distortion[1] - I_{30}	40180	|
φA Amps Demand Distortion[1] - I_{31}	40181	|
φA-B Volts Distortion Denominator	40182	| 2047 = 0Volts; 4095 = 150.0Volts | =40108
φA-B Volts Harm. Distortion - V_1	40183	|
φA-B Volts Harm. Distortion - V_2	40184	|
: :		| 0 = 0.0%; 9999 = 999.9%
: :		| Set to 0 on low signal
φA-B Volts Harm. Distortion - V_{30}	40212	|
φA-B Volts Harm. Distortion - V_{31}	40213	|
φB Amps Distortion Denominator	40214	| 2047 = 0Amps; 4095 = 10.0*Amps | =40102 if TDD, =40105 if THD
φB Amps Demand Distortion[1] - I_1	40215	|
φB Amps Demand Distortion[1] - I_2	40216	|
: :		| 0 = 0.0%; 9999 = 999.9%
: :		| Set to 0 on low signal
φB Amps Demand Distortion[1] - I_{30}	40244	|
φB Amps Demand Distortion[1] - I_{31}	40245	|
φB-C Volts Distortion Denominator	40246	| 2047 = 0Volts; 4095 = 150.0Volts | =40109
φB-C Volts Harm. Distortion - V_1	40247	|
φB-C Volts Harm. Distortion - V_2	40248	|
: :		| 0 = 0.0%; 9999 = 999.9%
: :		| Set to 0 on low signal
φB-C Volts Harm. Distortion - V_{30}	40276	|
φB-C Volts Harm. Distortion - V_{31}	40277	|

* - When CT1 Option (1Amp Input) is installed, divide this value by 5

[1] If TDD Denominator is set to 2047 (0Amps) the TDD calculation will use Fundamental Amps as the Denominator, which will result in all Current Distortions being expressed as THD.

 Copyright 2009 Bitronics, LLC

3.5.9 RTH INDIVIDUAL Data Registers for 2 Element Mode (Cont'd)

Quantity	Holding Register	Representation
φC Amps Distortion Denominator	40278	| 2047 = 0Amps; 4095 = 10.0*Amps | =40103 if TDD, =40106 if THD
φC Amps Demand Distortion[1] - I_1 φC Amps Demand Distortion[1] - I_2 : : : : φC Amps Demand Distortion[1] - I_{30} φC Amps Demand Distortion[1] - I_{31}	40279 40280 40308 40309	| | | 0 = 0.0%; 9999 = 999.9% | Set to 0 on low signal | |
φC-A Volts Distortion Denominator	40310	| 2047 = 0Volts; 4095 = 150.0Volts | =40110
φC-A Volts Harm. Distortion - V_1 φC-A Volts Harm. Distortion - V_2 : : : : φC-A Volts Harm. Distortion - V_{30} φC-A Volts Harm. Distortion - V_{31}	40311 40312 40340 40341	| | | 0 = 0.0%; 9999 = 999.9% | Set to 0 on low signal | |

* - When CT1 Option (1Amp Input) is installed, divide this value by 5

[1] If TDD Denominator is set to 2047 (0Amps) the TDD calculation will use Fundamental Amps as the Denominator, which will result in all Current Distortions being expressed as THD.

3.5.10 RTS Data Registers for 2 Element Mode

Quantity	Holding Register	Global Register	Representation
Reference Φ-Φ[3] Volts[2]	40028	28	2047 = 0Volts; 4095 = 150.0Volts
Phase Difference[2]	40029	29	247 = -180.0°; 2047 = 0°; 3847 = +180.0° (+ indicates that the Line Φ-Φ[3] voltage is LEADING the Reference Φ-Φ[3] voltage)
Reference Frequency[2]	40030	30	0 = <45.00Hz; 4500 = 45.00Hz 7500 = 75.00Hz; 9999 =>75.00Hz
Heartbeat State Counter	40031	31	See Section 3.10

[2] Registers 40028,29 & 30 are available on PowerPlex RTS (MTWIN4B/5B/6B) ONLY. All other instruments do not use these registers, and return a value of 2047.
[3] MTWIN4B Φ-Φ =A-B, MTWIN5B Φ-Φ =B-A, MTWIN6B Φ-Φ =B-C

 Copyright 2009 Bitronics, LLC

3.6 Writeable Registers

3.6.1 Setting CT and PT Ratios

The PowerPlex Digital Transducer is capable of internally storing and recalling CT and PT ratios. The only output quantities that are scaled by these ratios are the Energy quantities, registers 40019 through 40026 (Refer to Section 3.5 for register assignments). The CT and PT ratios are written to registers 40041 through 40044 over the Modbus Plus communication port, and are stored in non-volatile memory on the CT/PT Board. Each ratio is stored in two registers, one for the normalized format ratio, and the other for the divisor. Allowable constants for CT Value (40041) are 500 to 9999, and 1000 to 9999 for PT Value (40043). The divisors may be 1, 10, 100, or 1000 only. The number stored will be the high side rating of the CT. A 500:5 ratio CT will have a value of 500 stored, while a 100:1 CT will have a value of 100 stored. For example, to calculate a CT ratio from the data stored in the PowerPlex, use the following equation:

$$CT_{RATIO} = \frac{CT\ Value\ (40041)}{CT\ Ratio\ Divisor\ (40042)\ \acute{}\ CT\ Secondary}$$

$$PT_{RATIO} = \frac{PT\ Value\ (40043)}{PT\ Ratio\ Divisor\ (40044)}$$

The CT and PT ratios values may be used with the equations in Section or 3.7 to derive primary unit quantities from the PowerPlex. For example, the equation for amperes becomes:

$$AMPERE\text{s} = \frac{Value - 2047}{2048}\ \acute{}\ Full\ Scale\ Value\ \acute{}\ CT\ Ratio$$

The values stored in registers 40041 and 40043 are duplicated in registers 40016 and 40017 respectively. Registers 40016 and 40017 are READ ONLY and cannot be written to. In the event of a CT/PT Ratio Checksum Failure, the value in the CT Ratio and PT Ratio registers default to 65535 (FFFF Hex), and the value in the CT Ratio Divisor and PT Ratio Divisor default to 0001. See Section 3.8 for more details.

WARNING - THE RATIO NON-VOLATILE MEMORY STORAGE HAS A 1,000,000 CYCLE ENDURANCE (RATIOS CAN BE CHANGED 1,000,000 TIMES). ONLY WRITE TO RATIO REGISTERS WHEN THE RATIOS NEED TO BE CHANGED.

3.6.2 Resetting Energy and Demands

The Energy and Demand registers can be RESET by writing a bit pattern to Holding Register 40100. Any "1" bits in the proper position cause initiation of the corresponding RESET. Multiple RESETs can be accomplished by using either multiple

 Copyright 2009 Bitronics, LLC

WRITE commands or a single WRITE command with multiple bits set. Table 1 shows the correspondence between the RESET functions and the bits set. The Registers will be reset within 0.6 seconds, however it may take the meter up to 10 seconds to clear the data stored in the EEPROM. The USER must ensure that the power is not interrupted to the meter for this 10 second period after this command is issued.

Bit Position	Value	Description	Registers Affected	Global
0	1	Reset (ZERO) Energy	40019 .. 40026	19..26
1	2	Reset AMP Demands	40045 .. 40052, 40136, 40137	N/A
2	4	Reset Volt Demands	40053 .. 40061	N/A
3	8	Reset Power Demands	40062 .. 40070	N/A
4	16	Reset Harmonic Demands	40138 .. 40149	N/A

3.6.3 TDD Writeable Denominators

The PowerPlex RTH Digital Transducer is capable of internally storing and recalling Current Values that are used as Denominators in determining the Total Demand Distortion (TDD). The denominator values are stored for each phase, and are stored in Registers 40101, 40102, 40103 for Phase A, Phase B, and Phase C respectively. These denominators affect all Current Harmonic Measurements (Refer to Section 3.5 for register assignments). The Denominators are written to registers 40101 through 40103 over the Modbus Plus communication port, and are stored in non-volatile memory on the Analog Board. The value that needs to be stored follows the same offset binary equation that is used with the other measurements. For a 5A secondary CT, the equation for amperes becomes:

$$AMPEREs = \frac{Value - 2047}{2048} \times 10 \times \frac{CT\ Value}{CT\ Ratio\ Divisor \times 5}$$

where *Value* is the Binary Value that should be stored in the denominator register, and Amperes is the actual value of primary current that the user intends for the TDD calculations. The factory default value is 3071 which corresponds to 5 Amps Secondary (1 Amp for CI1 option). If the value stored in the denominator register are set to Zero amps (Value = 2047), then the Harmonic Distortion calculations will use the Fundamental Magnitude of the current, which will result in the Distortion Values to be in the form of THD instead of TDD. The values stored in registers 40101, 40102 and 40103 are duplicated in registers 40150, 40214 and 40278 respectively if the value are non-zero (TDD). If registers 40101,2,3 are set to zero (THD) then the registers 40150, 40214 and 40278 will contain the Magnitude of the Fundamental.

WARNING - THE DENOMINATOR NON-VOLATILE MEMORY STORAGE HAS A 1,000,000 CYCLE ENDURANCE (DENOMINATORS CAN BE CHANGED 1,000,000 TIMES). ONLY WRITE TO THE DENOMINATOR REGISTERS WHEN THE DENOMINATORS NEED TO BE CHANGED.

 Copyright 2009 Bitronics, LLC

3.6.4 Display Configuration Registers

PowerPlex “B” instruments provide READ/WRITE Display Configuration Registers. These registers are provided for future expansion and compatibility with MultiComm RTH instruments. These registers do not currently have any effect on PowerPlex units, however the registers are operational in that they can be written to and read from. They are stored in non-volatile memory (EEPROM) to allow for future upgrades.

WARNING - THE DISPLAY CONFIGURATION NON-VOLATILE MEMORY STORAGE HAS A 1,000,000 CYCLE ENDURANCE (DISPLAY CONFIGURATION CAN BE CHANGED 1,000,000 TIMES). ONLY WRITE TO THE DISPLAY CONFIGURATION REGISTERS WHEN THE DISPLAY CONFIGURATION NEEDS TO BE CHANGED.

3.6.5 Configuration Registers

PowerPlex “B” instruments provide READ/WRITE Configuration Registers that allow the user to configure various parameters within the instrument. These Configuration Registers are currently undefined for Modbus Plus, and will always return 0, however they are stored in non-volatile memory (EEPROM) to allow for future upgrades.

WARNING - THE CONFIGURATION NON-VOLATILE MEMORY STORAGE HAS A 1,000,000 CYCLE ENDURANCE (CONFIGURATION CAN BE CHANGED 1,000,000 TIMES). ONLY WRITE TO THE CONFIGURATION REGISTERS WHEN THE CONFIGURATION NEEDS TO BE CHANGED.

3.6.6 Tag Register

PowerPlex “B” instruments provide a “TAG” register for user identification purposes. This register is READ/WRITE register that allows the user to write a number from 1 to 32,767 in the tag register. The Instrument will write this value in non-volatile memory EEPROM, so that the value will be available after any power outage. Any attempts to write values above 32,767 will return an illegal value error. Units will be set to 0 from the factory.

WARNING - THE TAG REGISTER NON-VOLATILE MEMORY STORAGE HAS A 1,000,000 CYCLE ENDURANCE (THE TAG REGISTER CAN BE CHANGED 1,000,000 TIMES). ONLY WRITE TO THE TAG REGISTER WHEN THE TAG NEEDS TO BE CHANGED.

 Copyright 2009 Bitronics, LLC

3.7 Converting Data to Engineering Units

As was mentioned in Section 3.5, the majority of the data in the Holding Registers is stored in a **12-BIT OFFSET BINARY** format. This format was chosen to allow efficient use of registers, since both positive and negative quantities can be transmitted without the use of a SIGN (polarity) register. In this format, ZERO (0) is represented as 2047 counts, the most negative number is represented by 0 counts and the most positive number is represented by 4095 counts. While it would appear that this format limits the **ACCURACY** of the values transmitted in the registers, the **RESOLUTION** of this method is one part in 2048 which is 0.05%, actually 5 times better than the rated accuracy of the transducer, and therefore has no measurable effect on the accuracy of the transmitted value.

When displaying these values at another location, it may be desirable to convert the offset binary format into **ENGINEERING UNITS**. This conversion is readily accomplished using the following simple scaling equations:

BASIC EQUATION FOR OFFSET BINARY:

$$\textit{Engineering Units} = \frac{\textit{Value} - 2047}{2048} \times \textit{Full Scale}_{SECONDARY} \times \textit{Ratio}$$

The CT and PT ratios are the **NAMEPLATE** ratings of the transducer transformers. The PT ratio in these equations is the same as the PT ratio stored in the transducer since convention is to specify the PT ratio as a ratio to 1. The CT ratio in these equations, however is not the same as the ratio stored in the meter, but rather the number stored in the meter divided by 5. This is due to the fact that CT ratios are normally specified as a ratio to 5. For example a 500:5 CT and a 4:1 PT would have the following ratios:

$$CT_{RATIO} = 500{:}5 = \frac{500}{5} = 100 \qquad PT_{RATIO} = 4{:}1 = \frac{4}{1} = 4$$

The **Value** referred to in the equations would be the value stored in the register that you wished to convert to engineering units. For example if you wanted to convert Phase A Amperes into engineering units, Value would be the value in Holding Register 40002.

The **ENERGY Registers** are stored in the **BIN8** format, making these values readily usable with the standard **Double Precision Integer Math** functions available on PLCs. Using this data format, the address specifying the **WORD** (both registers) is the address of the first of the two registers in the pair (i.e. the one with the lowest register number). This register will have the most significant portion of the number. If the BIN8 data format is specified, no conversion is required.

FREQUENCY is stored as a single binary value that is the actual frequency times 100.

PHASE is stored as an offset binary value that is the phase difference times 10.

THD and **TDD** are stored as a single binary value that is the actual THD or TDD times 10.

K FACTOR is stored as a single binary value that is the actual K Factor times 100.

 Copyright 2009 Bitronics, LLC

2 ½ or 3 ELEMENT EQUATIONS:

$$AMPERES_{(Inst,Fund,Demand,Max)} = \frac{Value - 2047}{2048} \times 10^{*} \times CT_{RATIO}$$

$$AMPERES_{N\ (Inst,Fund,Demand,Max)} = \frac{Value - 2047}{2048} \times 15^{*} \times CT_{RATIO}$$

$$VOLTS_{L\text{-}N\ (Inst,Fund,Demand,Min,Max)} = \frac{Value - 2047}{2048} \times 150 \times PT_{RATIO}$$

$$VOLTS_{L\text{-}L\ (Inst,Demand,Min,Max)}(SCALED) = \frac{Value - 2047}{2048} \times 150 \times PT_{RATIO} \times \sqrt{3}$$

$$WATTS\ (VARS)\ (VAS)_{TOTAL\ (Inst,Demand,Min,Max)} = \frac{Value - 2047}{2048} \times 3000^{*} \times PT_{RATIO} \times CT_{RATIO}$$

$$WATTS\ (VARS)\ (VAS)_{PER\ PHASE\ (Inst)} = \frac{Value - 2047}{2048} \times 1000^{*} \times PT_{RATIO} \times CT_{RATIO}$$

$$kWh\ (kVARh) = Value_{HIGH} \times 10{,}000 + Value_{LOW}$$

$$FREQUENCY = \frac{Value}{100}$$

$$PF_{(True,\ Displacement)} = \frac{Value - 2047}{1000}\ (-Lag, +Lead)$$

$$PHASE\ DIFFERENCE = \frac{Value - 2047}{10}\ (+Line\ Leading\ Ref)$$

$$THD, TDD_{(Amps,Volts,Inst,Demand,Max)} = \frac{Value}{10}$$

$$K\ FACTOR = \frac{Value}{100}$$

** For CT1 Option, divide this value by 5*

 Copyright 2009 Bitronics, LLC

2 ELEMENT EQUATIONS:

$$AMPERES_{(Inst,Fund,Demand,Max)} = \frac{Value - 2047}{2048} \times 10^{*} \times CT_{RATIO}$$

$$VOLTS_{L\text{-}L\ (Inst,Fund,Demand,Min,Max)} = \frac{Value - 2047}{2048} \times 150 \times PT_{RATIO}$$

$$WATTS\ (VARs)\ (VAs)_{TOTAL\ (Inst,Demand,Min,Max)} = \frac{Value - 2047}{2048} \times 2000^{*} \times PT_{RATIO} \times CT_{RATIO}$$

$$kWh\ (kVARh) = Value_{HIGH} \times 10{,}000 + Value_{LOW}$$

$$FREQUENCY = \frac{Value}{100}$$

$$PF_{(True,Displacement)} = \frac{Value - 2047}{1000}\ (-Lag, +Lead)$$

$$PHASE\ DIFFERENCE = \frac{Value - 2047}{10}\ (+Line\ Leading\ Ref)$$

$$THD, TDD_{(Amps,Volts,Inst,Demand,Max)} = \frac{Value}{10}$$

$$K\ FACTOR = \frac{Value}{100}$$

$$*\ For\ CT1\ Option,\ divide\ this\ value\ by\ 5$$

The above equations provide answers in fundamental units (VOLTs, AMPs, WATTs and VARs). If the user desires other units such as KILOVOLTs, KILOWATTs or KILOVARs, the answers given by the equations should be divided by 1,000. If the user desires MEGAWATTs or MEGAVARs, the answers given by the equations should be divided by 1,000,000.

3.8 Health Check

The following information is contained in the Health Check register (bit 15 is the high order bit) and the description indicates the meaning when the bit is set. **The Health Check Register should always be read and checked before interpreting data, since some failure modes will cause erroneous data to be presented.** Please consult Table 4 for a full description of the failures.

 Copyright 2009 Bitronics, LLC

TABLE 4 - HEALTH CHECK CODES for PowerPlex DIGITAL TRANSDUCER

Bit	Description	Effects of Fault	Corrective Action
0	CT/PT Ratio Checksum Failure	All measurements except energy are accurate, CT & PT ratio may be corrupted. All Energies calculated after the failure will be in secondary units (CTR = 5:5 & PTR = 1:1). CT & PT Ratio register values default to 65535 (FFFF Hex), and CT & PT Ratio Divisor register values default to 0001.	Attempt to reset the CT&PT ratios. If Fault continues, replace CT/PT Board and recalibrate the instrument.
1	CT/PT Board Calibration Checksum Failure	Calibration constants for the CT/PT Board are in error. The communication option output is reduced in accuracy to approximately +/-3%.	Replace CT/PT Board and recalibrate the instrument.
2	Analog calibration Checksum Failure	Calibration constants for the Main Processor Board are in error. The communication option output is reduced in accuracy to approximately +/-3%.	Replace Main Processor Board.
3	Input Over-Range (Clipping)	Peak input quantity exceeds the range of the instrument. Communication option output accuracy reduced by an amount depending upon the degree of over-range.	Verify input signals are within range. If within range, replace Main Processor board.
4	Program Memory (EPROM) Failure	The microcontroller has detected a fault in program memory and is attempting to restart itself. Communication option will cease transmitting as long as the fault exists.	Replace Main Processor Board.
5	Analog-to-Digital converter (ADC) Self-Test Error	Instrument cannot read any signals. Data returned by communications option will be corrupted.	Replace Main Processor board.
6	External Memory (XRAM) Failure	Data returned by communications option may be corrupted.	Replace Main Microcontroller Board.
7	Main Processor - Network Interface Crash	Communications data will not be available. Host processor will attempt to restart interface every 30 seconds.	If failure continues, replace Network Interface Board
8	Phase Calibration	Calibration constants for Phase	Replace CT/PT Board

 Copyright 2009 Bitronics, LLC

	Checksum Failure	correction are in error. The communication option output is reduced in accuracy to approximately +/-.5%.	and recalibrate the instrument
9	Energy Storage Checksum Failure	Energy values that are stored and recalled at powerup may be corrupted and inaccurate.	Replace CT/PT Board and recalibrate the instrument.
10	Demand Storage Checksum Failure	Demand value that is stored in EEPROM and recalled at powerup is corrupted and inaccurate. The corrupted demand value will appear as overranged.	Reset corrupted demand value. If failure is reoccurring, replace Main Processor Board.
11	Configuration Parity Error	Instrument Configuration Corrupted	Rewrite Configuration

3.9 Modbus Plus Diagnostic Status LED

The Modbus Plus Diagnostic LED is an indicator that shows the type of communications activity on the Modbus Plus port on the PowerPlex transducer. The Diagnostic LED is a green indicator that is located on the front panel next to the power indicator. A specific flash pattern indicates the nature of the Modbus Plus communication activity as listed below:

Six flashes per second: The normal operating state for a Modbus Plus node. The node is successfully receiving and passing the token. All nodes on the network should be flashing this pattern.

One flash per second: The node is offline after just being powered up, or after hearing a message from another node with the same address (duplicate addresses are not allowed). In this state, the node monitors the network and builds a table of active nodes and token-holding nodes. It remains in this state for five seconds, then attempts to go to its normal operating state.

Two flashes, then OFF for two seconds: The node is hearing the token being passed among other nodes, but is never receiving the token. Check the network link for an open or short circuit, or for a defective termination. Check that the flexible circuit connector inside the PowerPlex transducer is correctly seated.

Three flashes, then OFF for 1.7 seconds: The node is not hearing any other nodes. It is periodically claiming the token, but finding no other node to which to pass it. Check the network link for an open or short circuit, or for a defective termination. Check that the flexible circuit connector inside the PowerPlex transducer is correctly seated.

Four flashes, then OFF for 1.4 seconds: The node has heard a valid message from another node that is using the same address as this node. The node remains

 Copyright 2009 Bitronics, LLC

offline in this state as long as it continues to hear the duplicate address. If the duplicate address is not heard for five seconds, the node then changes to the pattern of one flash every second.

3.10 Heartbeat State Counter

PowerPlex “B” instruments provide a Heartbeat State Counter Register that allows the user to determine when the data is updated within the instrument. This counter will increment by the number of internal 10 millisecond states that have elapsed since the last time the data was updated. Users can use a change in this value as an indication of the instant that the data has been updated in the PowerPlex processor. On sequential poles, users can also use the difference in this counter to determine the time that has elapsed between poles. A third use of this register as a visual indicator that the data is changing, allows users of certain MMIs to identify disruption in the polling of the instrument. The Heartbeat State Counter is a full 16bit counter that rolls over at 65535 (655.35 seconds - 10.9225 minutes). The counter starts at zero on power-up, and is NOT stored in non-volatile memory.

 Copyright 2009 Bitronics, LLC

3.11 Meter ID Register

PowerPlex “B” instruments provide an “ID” register for model identification purposes. This register is preprogrammed at the factory, refer to table 5.

Model	ID	Model	ID
MTWIN1B-S500 - 3 Elem. Mode	1	MTWDN1B-S500 - 3 Elem. Mode	101
MTWIN1B-S500 - 2 Elem. Mode	2	MTWDN1B-S500 - 2 Elem. Mode	102
MTWIN1B-S5x0 - 3 Elem. Mode	3	MTWDN1B-S5x0 - 3 Elem. Mode	103
MTWIN1B-S5x0 - 2 Elem. Mode	4	MTWDN1B-S5x0 - 2 Elem. Mode	104
MTWIN2B-S500 - 3 Elem. Mode	5	MTWDN2B-S500 - 3 Elem. Mode	105
MTWIN2B-S500 - 2 Elem. Mode	6	MTWDN2B-S500 - 2 Elem. Mode	106
MTWIN2B-S5x0 - 3 Elem. Mode	7	MTWDN2B-S5x0 - 3 Elem. Mode	107
MTWIN2B-S5x0 - 2 Elem. Mode	8	MTWDN2B-S5x0 - 2 Elem. Mode	108
MTWIN3B-S500 - 2½ or 3 El. Mode	9	MTWDN3B-S500 - 2½ or 3 El Mode	109
MTWIN3B-S500 - 2 Element Mode	10	MTWDN3B-S500 - 2 Element Mode	110
MTWIN3B-S5x0 - 2½ or 3 El. Mode	11	MTWDN3B-S5x0 - 2½ or 3 El Mode	111
MTWIN3B-S5x0 - 2 Element Mode	12	MTWDN3B-S5x0 - 2 Element Mode	112
MTWIN4B-S500 - 2½ Elem. Mode	13		
MTWIN4B-S500 - 2 Element Mode	14		
MTWIN3B-S500-NS0012 2½ or 3 Elem. Mode (Special)	15		
MTWIN3B-S500-NS0012 2 Element Mode (Special)	16		

 Copyright 2009 Bitronics, LLC

Model	ID	Model	ID
MTWIN5B-S500 - 2½ Elem. Mode	17		
MTWIN5B-S500 - 2 Element Mode	18		
MTWIN6B-S500 - 2½ Elem. Mode	19		
MTWIN6B-S500 - 2 Element Mode	20		
MTWIN3B-S500-NS0068 2 Element Mode (Only) (Special)	21		

Table 5 - Instrument ID Numbers

 Copyright 2009 Bitronics, LLC

4.0 INSTALLATION

4.1 Setting Modbus Plus Address

The PowerPlex transducer provides for direct connection to a Modbus Plus Network. As was mentioned in Section 3.1, each device on a given network must have a different PHYSICAL ADDRESS. A pair of address selector switches (SW3 & SW4) are located on the PowerPlex Output Connector Board, and they are accessible by removing the clear cover on the front panel.

If the address needs to be changed, the following procedure should be followed:

1. With power removed from the PowerPlex transducer, remove the two screws holding the clear cover to the front panel of the transducer.

2. The ADDRESS selector switches are SW3 & SW4, and are located on the right hand side of the front panel, just below the Power and Status lamps. The switches have 16 positions (0-9,A-F). The switch can be rotated with a small flat blade screwdriver, or a small phillips screwdriver. Using the table on the next two pages, find the desired MODBUS PLUS address and dial the switches SW4 and SW3 to the corresponding hexadecimal values. **The NEW address will take effect when power is restored**.

3. Replace the front cover, replace the two cover screws. Done!!

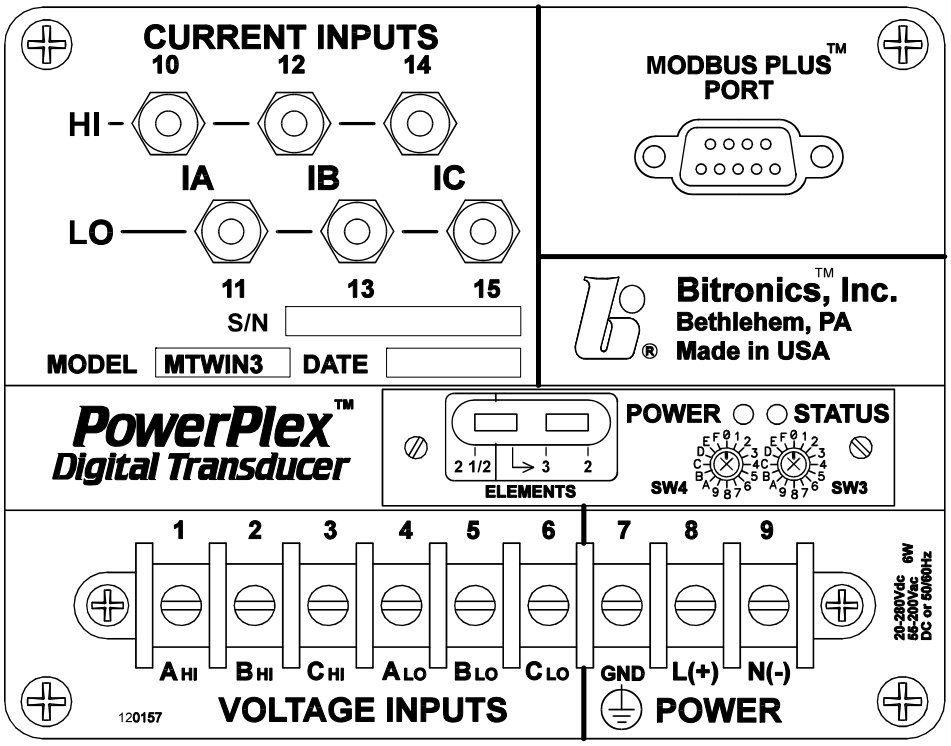

+ ADDR	SW4	SW3
1	0	0
2	0	1
3	0	2
4	0	3
5	0	4
6	0	5
7	0	6
8	0	7
9	0	8
10	0	9
11	0	A
12	0	B
13	0	C
14	0	D
15	0	E
16	0	F

MB+ ADDR	SW4	SW3
17	1	0
18	1	1
19	1	2
20	1	3
21	1	4
22	1	5
23	1	6
24	1	7
25	1	8
26	1	9
27	1	A
28	1	B
29	1	C
30	1	D
31	1	E
32	1	F

MB+ ADDR	SW4	SW3
33	2	0
34	2	1
35	2	2
36	2	3
37	2	4
38	2	5
39	2	6
40	2	7
41	2	8
42	2	9
43	2	A
44	2	B
45	2	C
46	2	D
47	2	E
48	2	F

MB+ ADDR	SW4	SW3
49	3	0
50	3	1
51	3	2
52	3	3
53	3	4
54	3	5
55	3	6
56	3	7
57	3	8
58	3	9
59	3	A
60	3	B
61	3	C
62	3	D
63	3	E
64	3	F

4.2 Modbus Plus Cable

The Modbus Plus cable connects to the PowerPlex transducer via a standard 9-pin D connector located on the front of the transducer. Modicon recommends Belden 9841 cable or equivalent. The transducer is designed to accept standard Modicon Modbus Plus Connectors. The cable should enter the connector from the side with 4 pins, i.e. the narrow side. If the user is employing the Modicon Connector Tool (AS-MBPL-001), the wires should be dressed the same as the Modicon 385/485. This cable dress will put the Modbus Plus Cable to the outside of the transducer, and will minimize the interference between the cable and the input studs. The Modbus Plus Connector should be secured to the PowerPlex transducer using #4-40 screws supplied with the Modicon Connector Kit. For additional details, request Modicon publication GM-MBPL-001 “Modicon Modbus Plus Network Planning and Installation Guide” directly from your local Modicon distributor.

 Copyright 2009 Bitronics, LLC

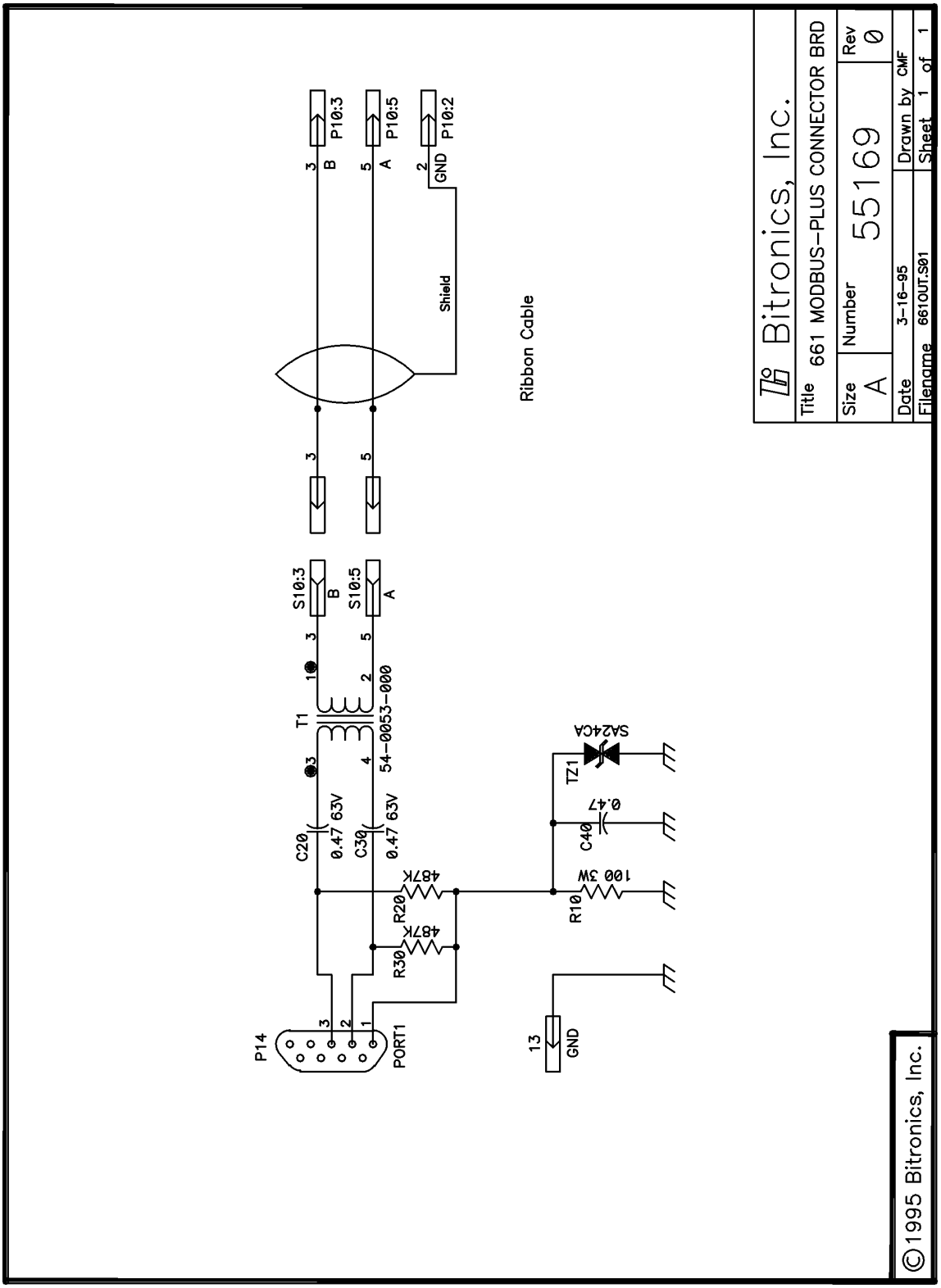
P14
PORT1
C20
0.47 63V
C30
0.47 63V
T1
54-0053-000
S10:3
B
S10:5
A
R20
48ZK
R30
48ZK
13
GND
R10
100 3W
C40
0.47
TZ1
SA24CA
P10:3
P10:5
P10:2
GND
Shield
Ribbon Cable
Bitronics, Inc.
Title
661 MODBUS-PLUS CONNECTOR BRD
Size
A
Number
55169
Rev
0
Date
3-16-95
Drawn by
CMF
Filename
6610UT.S01
Sheet
1 of 1
©1995 Bitronics, Inc.

Revision	Date	Changes	By
A	01/30/2009	Update Bitronics Name, Logo	E. Demicco
B	08/09/09	Updated logos and cover page	MarCom
C			

Bitronics LLC. 261 Brodhead Road, Bethlehem, PA. 18017
(610) 997-5100 Fax (610) 997-5450
www.novatechweb.com/bitronics