Power Generation

Installation Manual

PowerCommand® FT-10 Network LonWorks® System Annunciator

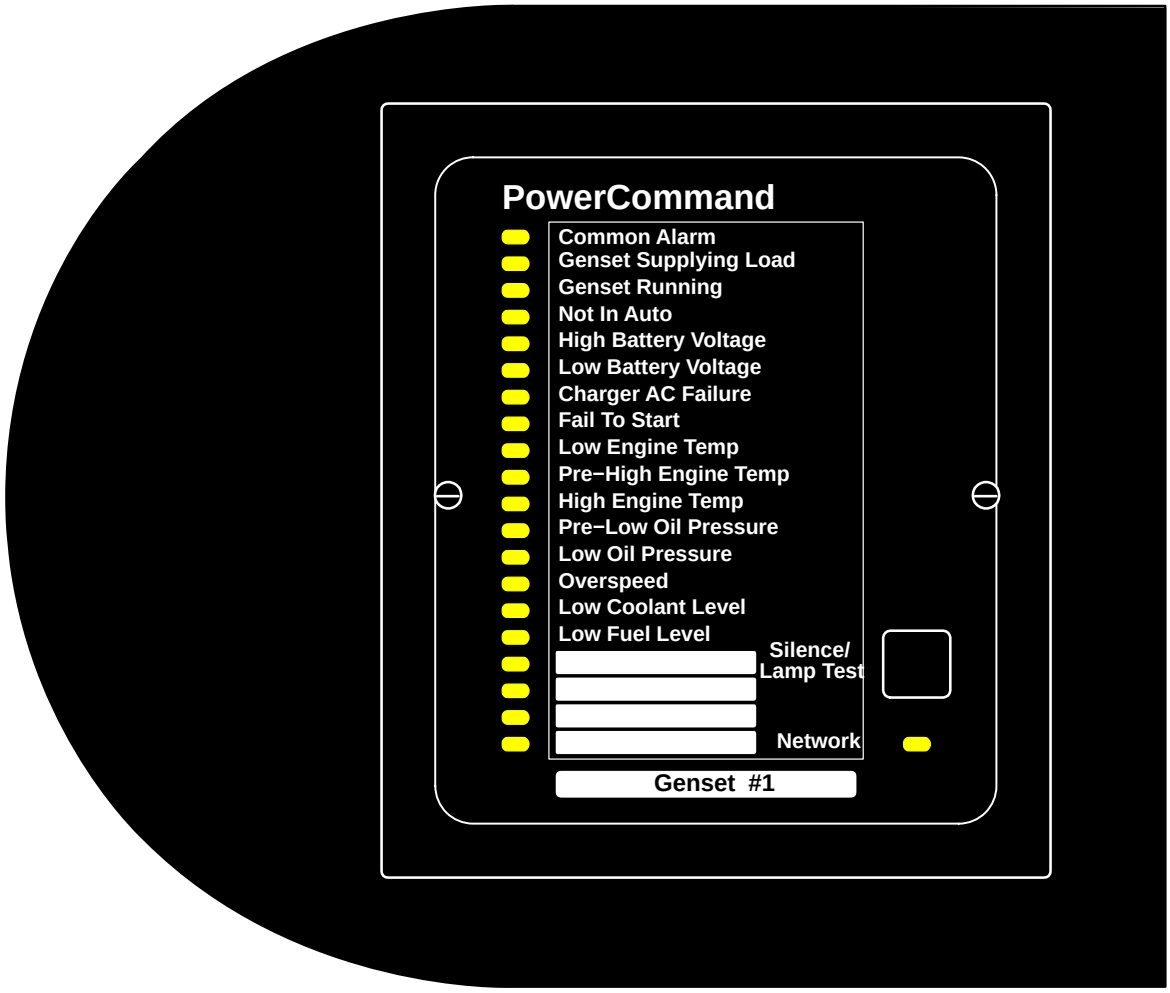

Printed in U.S.A.

900-0293B 10-2004

Safety Precautions

⚠ DANGER ***High voltage is deadly. Installation and service of the network annunciator involves working with high voltage equipment. Installation and service must be performed by trained and experienced personnel working with such equipment. Disconnect the utility line from the transfer switch and disconnect power from the battery charger, day tank and any other power equipment where connections are to be made.***

⚠ WARNING ***Accidental starting of the generator set while working on it can cause severe injury or death. Disconnect the battery cables to prevent accidental starting. Always disconnect the negative (−) cable first, and connect it last, to prevent arcing if a tool accidentally touches the frame or other grounded metal parts of the set while connecting or disconnecting the positive (+) cable. Arcing can ignite explosive hydrogen gas given off by the battery and cause severe injury. Ventilate the battery compartment before removing cables.***

Table of Contents

TITLE **PAGE**

SAFETY PRECAUTIONS . . . . . **Inside Front Cover**

INTRODUCTION **1**

About This Manual 1

Requirements 1

How to Obtain Service 1

DESCRIPTION **3**

Network Overview 4

INSTALLATION **5**

Physical Installation 5

Mounting 5

Wiring 6

Termination 6

Power 6

Conduit 7

Inserts 7

Self-Installation 8

Configuration 8

Annunciation Set 9

Lamps 9

Horn 9

Logical Installation 9

Binding Sequence 10

Verify Binding 10

Removing Bindings 10

Re-Binding 10

LonMaker Installation 10

Network Variables 11

Configuration 12

OPERATION **13**

Status Lamps 13

Horn 13

Silence/Lamp Test 13

Network Status Lamp 13

TROUBLESHOOTING **15**

Pre-Checks 15

Annunciator 15
Installation 15
Network 15

Troubleshooting 15

Status Lamps 15
Network Status Lamp 15
Silence/Lamp Test Button 16
Horn 16
LonMaker 16

PARTS INFORMATION **17**

APPENDIX A − DEFAULT LAMP SETTINGS . . . . . A−1

Self-Installed Lamp Settings . . . . . A−1

APPENDIX B − ANNUNCIATOR SET FUNCTIONS . . . . . B−1

Genset Annunciation Sets . . . . . B−1

ATS Annunciation Sets . . . . . B−2

APPENDIX C − CUSTOM INSERTS . . . . . C−1

Creating Custom Inserts . . . . . C−1

Refer to the *PowerCommand Network Installation and Operation Manual* (900−0529) for instructions on wiring, installation and connection of this module to the PowerCommand Network.

Introduction

ABOUT THIS MANUAL

This manual covers the operation and installation of the LonWorks® FT-10 System Annunciator in a PowerCommand® FT-10 Network.

The LonWorks System Annunciator (LSA) monitors and reports operational status of a generator set and/or transfer switch connected to a network.

The following topics are covered in this manual:

- Installation
  - Physical Installation
  - Self-Installation
- Operation
- Troubleshooting
- Parts

Requirements

- PowerCommand FT-10 Genset, Transfer Switch, CCM-G, or CCM-T
- NEMA Level IV Stranded Twisted-Pair Cable
- 14−22 AWG copper stranded wire (depending on distance)
- LonMaker™ Software
- Cummins Power Generation (CPG) Device Stencil (LonMaker installed only)

Network installation must be performed by trained and experienced network personnel.

Refer to the *PowerCommand Network Installation and Operation Manual* (900−0529) for instructions on network wiring and LonMaker software.

All network data wiring must follow a specific network topology and must fall within distance limits. Network power wiring must be sized according to source voltage, distance and load.

A parts list is also included for all available service parts. Study this manual carefully and observe all warnings, cautions and installation procedures.

HOW TO OBTAIN SERVICE

When the equipment requires service, contact the nearest dealer or distributor. Factory-trained Parts and Service representatives are ready to handle all your service needs.

If you are unable to locate a dealer or distributor, consult the Yellow Pages. Typically, our distributors are listed under:

GENERATORS-ELECTRIC or
ELECTRICAL PRODUCTS

For the name of your local Cummins® Distributor in the United States or Canada, call 1-800-888-6626 (this automated service utilizes touch-tone phones only). By entering your area code and the first three digits of your local telephone number, you will receive the name and telephone number of the distributor nearest you.

For outside North America, call Cummins Power Generation, 1-763-574-5000, 7:30 AM to 4:00 PM, Central Standard Time, Monday through Friday. Or, send a fax using the fax number 1-763-528-7229.

⚠WARNING

INCORRECT SERVICE OR PARTS REPLACEMENT CAN RESULT IN SEVERE PERSONAL INJURY, DEATH, AND/OR EQUIPMENT DAMAGE. SERVICE PERSONNEL MUST BE TRAINED AND EXPERIENCED TO PERFORM ELECTRICAL AND/OR MECHANICAL SERVICE ON HIGH VOLTAGE EQUIPMENT.

PowerCommand is a registered trademark of Cummins Inc.
LonWorks and Echelon are registered trademarks of Echelon Corp.
LonMaker is a trademark of Echelon Corp.

THIS PAGE INTENTIONALLY LEFT BLANK

Description

The LonWorks System Annunciator:

- Available with or without an enclosure
- Includes NFPA 110 English and Spanish language inserts with blank backs
- Self-Installs (4 nodes) or LonMaker programmed and Installed
- Verifies Network Communications
- Configurable Lamps (LonMaker programmed only)
- Configurable Horn
- Annunciates Multiple Devices Simultaneously (Genset, Automatic Transfer Switch [ATS], etc.)
- Customizable Lamp Nameplate Insert.

The LonWorks System Annunciator contains 20 programmable[1] lamps and a horn to annunciate the system status and fault conditions of the emergency power system (see Figure 1). The lamp colors can be configured as *green, red*, or *amber* as well as *steady on* or *flashing*.

Each lamp may be configured to sound an audible horn. The horn can be configured for loud or soft operation, or disabled entirely.

The *Network Status* lamp indicates the state of the network in the event that communications to the emergency power system have failed.

The Annunciator can install itself into the network (self-installed) or may be programmed and installed using LonMaker. For simple limited installations, up to 4 Annunciators may be installed in the same network with a single Genset and ATS. However, more complicated network systems require LonMaker for installation.

1 Requires LonMaker installation method to customize the lamp operation.

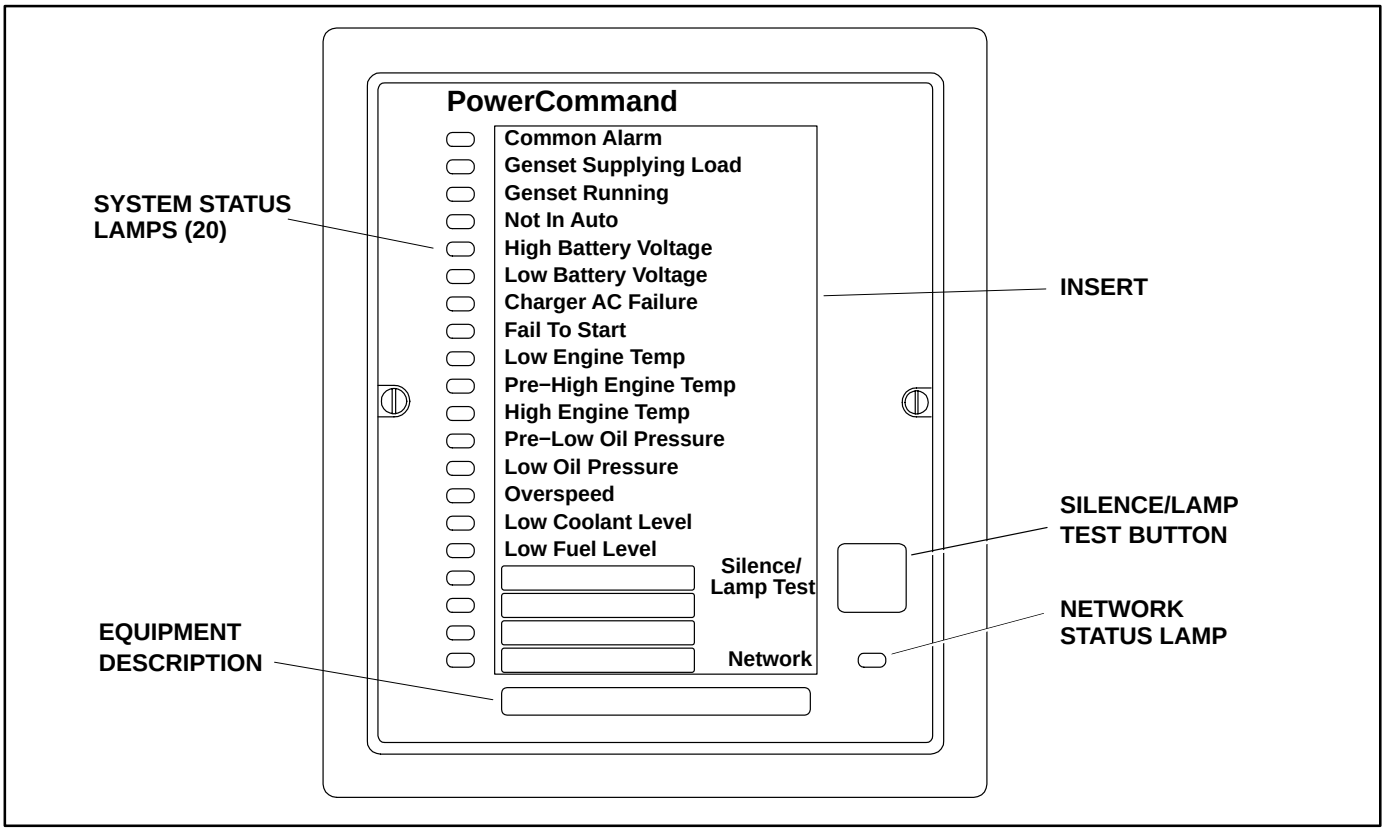

FIGURE 1. ANNUNCIATOR PANEL

NETWORK OVERVIEW

After mounting, the LonWorks System Annunciator is ready to install itself into a network. LonMaker is not required to install the device(s), if the following criteria are met.

- The system consists of a single genset and/ or a single ATS.
- All devices in the system have the ability to self-install to an FT-10 network (see Figure 2). The following genset and ATS devices have the ability to self-install:
  - PCC 3100 genset with an FT-10 GCM
  - PCC 3200 genset with an FT-10 GLC
  - PCC 2100 genset with an FT-10 NCM
  - Non-PCC genset with an FT-10 CCM-G
  - PowerCommand ATS with an FT-10 NCM
  - Non-PowerCommand ATS with an FT-10 CCM-T
- NFPA 110, Genset Extended*, Genset Custom, or ATS Extended *Annunciation Set* is selected.
- A maximum of 4 Annunciators are being installed. Each Annunciator must display a different *Annunciation Set*. (See page 9.)

* A CCM-G does not support a Genset Extended Annunciation set.

If the above conditions are met, all devices in the system can be automatically installed (self-install) when powered up. After power up, proceed with *Self-Installation* on page 8.

If any of the above conditions are not satisfied, the entire system must be programmed and installed using LonMaker (Page 10).

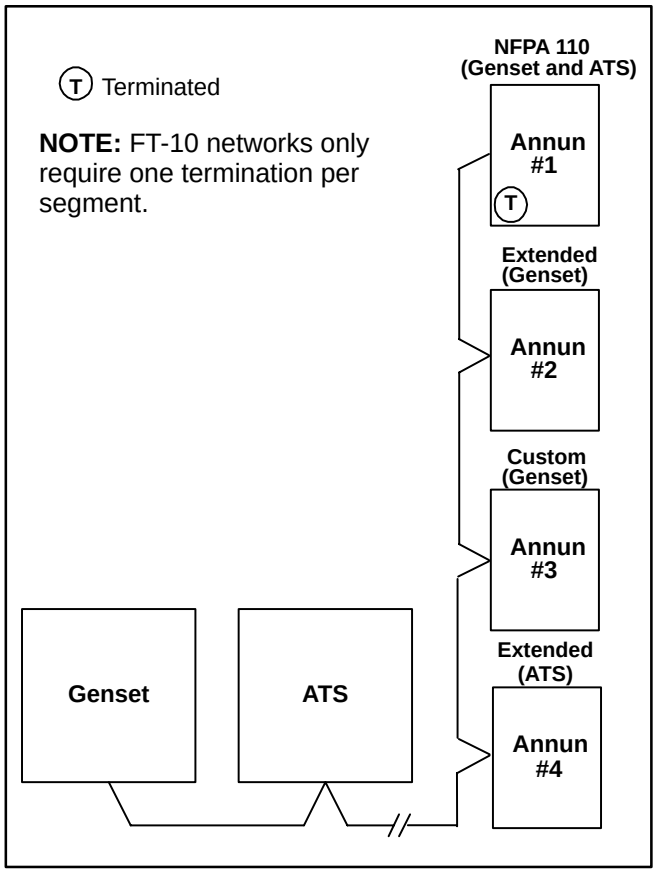

FIGURE 2. SELF-INSTALLED NETWORK REPRESENTATION

Installation

PHYSICAL INSTALLATION

⚠ DANGER ***High voltage is deadly. Installation and service of the network annunciator involves working with high voltage equipment. Installation and service must be performed by trained and experienced personnel working with such equipment. Disconnect the utility line from the transfer switch and disconnect power from the battery charger, day tank, and any other power equipment where connections are to be made.***

⚠ WARNING ***Accidental starting of the generator set while working on it can cause severe injury or death. Disconnect the battery cables to prevent accidental starting. Always disconnect the negative (−) cable first, and connect it last, to prevent arcing if a tool accidentally touches the frame or other grounded metal parts of the set while connecting or disconnecting the positive (+) cable. Arcing can ignite explosive hydrogen gas given off by the battery and cause severe injury. Ventilate the battery compartment before removing cables.***

Mounting

The Annunciator is available either with a panel or enclosure mounting.

Enclosure Mounting

1. Remove the front panel assembly from the enclosure.

2. Punch out necessary hole(s) in the enclosure for conduit or wires.

   ⚠ WARNING ***Drilling into utility lines can cause severe personal injury or death. Make sure no wires, plumbing, or gas lines run behind the mounting area before drilling the mounting holes.***

3. Locate the desired location on wall. Using the enclosure as a template, mark the required holes (see Figure 3). Before cutting or drilling, make sure no wiring, plumbing or gas lines run behind the wall. Attach mounting brackets to annunciator using the screws provided.

4. Mount the enclosure securely to the wall at the desired location.

5. Install conduit and wiring as needed. See page 6.

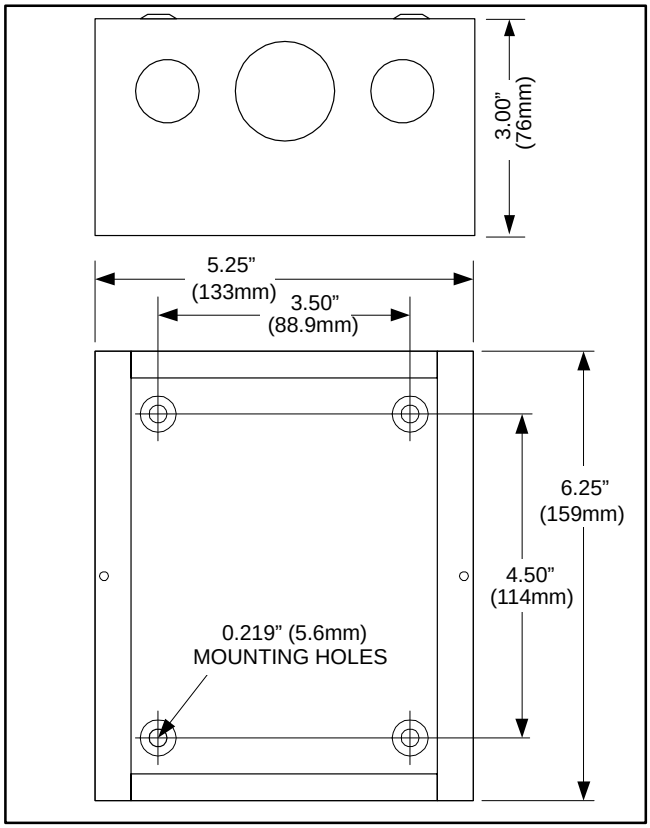

FIGURE 3. ENCLOSURE FOOTPRINT

Panel Mounting

1. Remove hex nuts from the front panel assembly.

2. Locate desired location on the modular panel and cutout rectangle and holes as shown in Figure 4.

3. Install conduit and wiring as needed. See page 6.

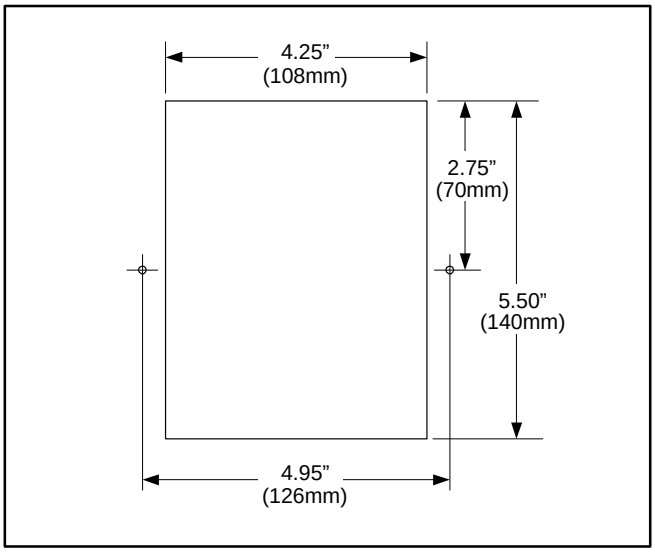

FIGURE 4. PANEL FOOTPRINT

WIRING

Termination

If the Annunciator is terminated, the termination switch S1 must be set. This is accomplished by moving it to the ON or TERM position.

NOTE: For free topology, only one device on each segment must be terminated. The device terminator switch can be used for this type of termination. Multidrop bus topology requires termination at each end of the bus using multidrop bus terminators (Echelon P/N 44101).

Power

Power Inputs: J1-3 (+) and J1-5 (−)

Power Outputs: J1-4 (+) and J1-6 (−)

Operating Voltage: 8.0 to 30.0 VDC

Power: 3.5 W max, 0.8 W typical

Input Current: 430 mA max, 80 mA typical

Distance: See Table 1.

TABLE 1. DISTANCE vs WIRE SIZE

Copper Wire Size (AWG)	Maximum Distance in feet	
	12V	24V
22[1]	330 (100m)	1110 (338m)
20	520 (158m)	1760 (537m)
18	820 (250m)	2790 (852m)
16	1300 (398m)	4430 (1352m)
14	2070 (631m)	4600[2] (1400m)

1. Twisted-pair cable (use orange/orange-white).
2. Limited by maximum data bus length.

See the *PowerCommand Network Installation and Operator’s Manual (900−0529)* for more information.

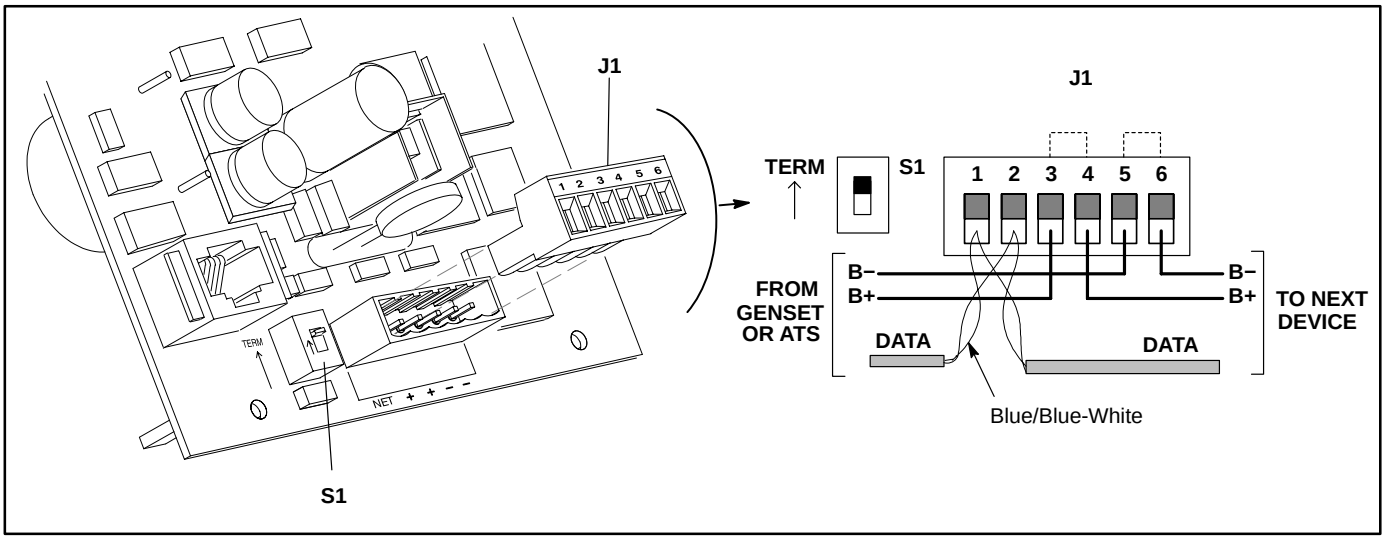

FIGURE 5. ANNUNCIATOR WIRING AND TERMINATION

Conduit

When installing conduit, observe the following precautions:

1. Before beginning conduit installation, cover all components to prevent accidental entry of metal shavings.

2. If using rigid conduit, install at least 2 feet (0.6m) of flexible conduit between the rigid conduit and the Genset to absorb vibration.

3. Always follow local code and use correct materials when installing cable. There is no technical limitation associated with single conduit for both network and power supply wiring, but some authorities may require separate conduit for data and DC lines.

   NOTE: The second twisted-pair (orange/orange-white) may be used for DC wiring. See wiring distance limits for 22 AWG (Table 1).

4. Always run DC wiring in separate conduit from AC power lines to avoid interference that could cause control problems.

⚠CAUTION ***Installation debris can cause equipment failure. Cover all equipment before drilling to prevent entry of metal shavings.***

Inserts

Pre-printed labels for the lamps are located on a removable insert. The Annunciator is shipped with pre-printed NFPA 110 inserts for English and Spanish. To create your own custom insert, turn the English or Spanish insert over and label each lamp line individually. Place the insert completely into the slot at the top of the Annunciator.

Appendix C contains instructions for creating a custom insert using Microsoft Word.

The wide blank label at the bottom of the insert allows for identifying the Genset and/or ATS being monitored.

SELF-INSTALLATION

Configuration

When using the self-installation method, the Annunciator is configured with switch S2 only. Switch S2 sets the *Node Address, Annunciation Set,* and *Horn* operation. *Node Address* and *Annunciation Set* configuration apply only to self-installed devices.

NOTE: Lamps cannot be individually configured when self-installed.

Node Address

Each node on a self-installed network must have a unique address. Switches 1 through 4 of S2 are used to set the *Node Address* of the Annunciator. The default binary node address is 0100 (decimal address = 4), which is an “OK” LED pulse rate of 4.

The switches are oriented so that switch S2-1 is the most significant bit (MSB) of the *Node Address.* Thus, S2-1 has a value of “8” when it is ON. S2-2 has a value of 4, S2-3 has a value of 2, and S2-4 has a value of 1.

Example: To set up a *Node Address* of 3, set switch node configuration switch S2 as follows: S2-1 OFF, S2-2 OFF, S2-3 ON and S2-4 ON (binary setting 0011=0+0+2+1=3 decimal). See Figure 6 and Table 2.

TABLE 2. SETTING THE NODE ADDRESS (S2-1−4)

S2-1 (8)	S2-2 (4)	S2-3 (2)	S2-4 (1)	Address (binary)	Address (decimal)
OFF	OFF	OFF	OFF	0000	0[1]
OFF	OFF	OFF	ON	0001	1
OFF	OFF	ON	OFF	0010	2
OFF	OFF	ON	ON	0011	3
				↓	↓
ON	ON	ON	ON	1111	15

Note 1: “0” (zero) is not a valid Address.

Be sure to assign each node in the network a unique address. The *Node Address* can be verified by counting the number of pulses of the “OK” LED (DS22). See Figure 6.

NOTE: If the Annunciator is installed using LonMaker, switches S2-1 thru S2-4 have no bearing on the Node Address.

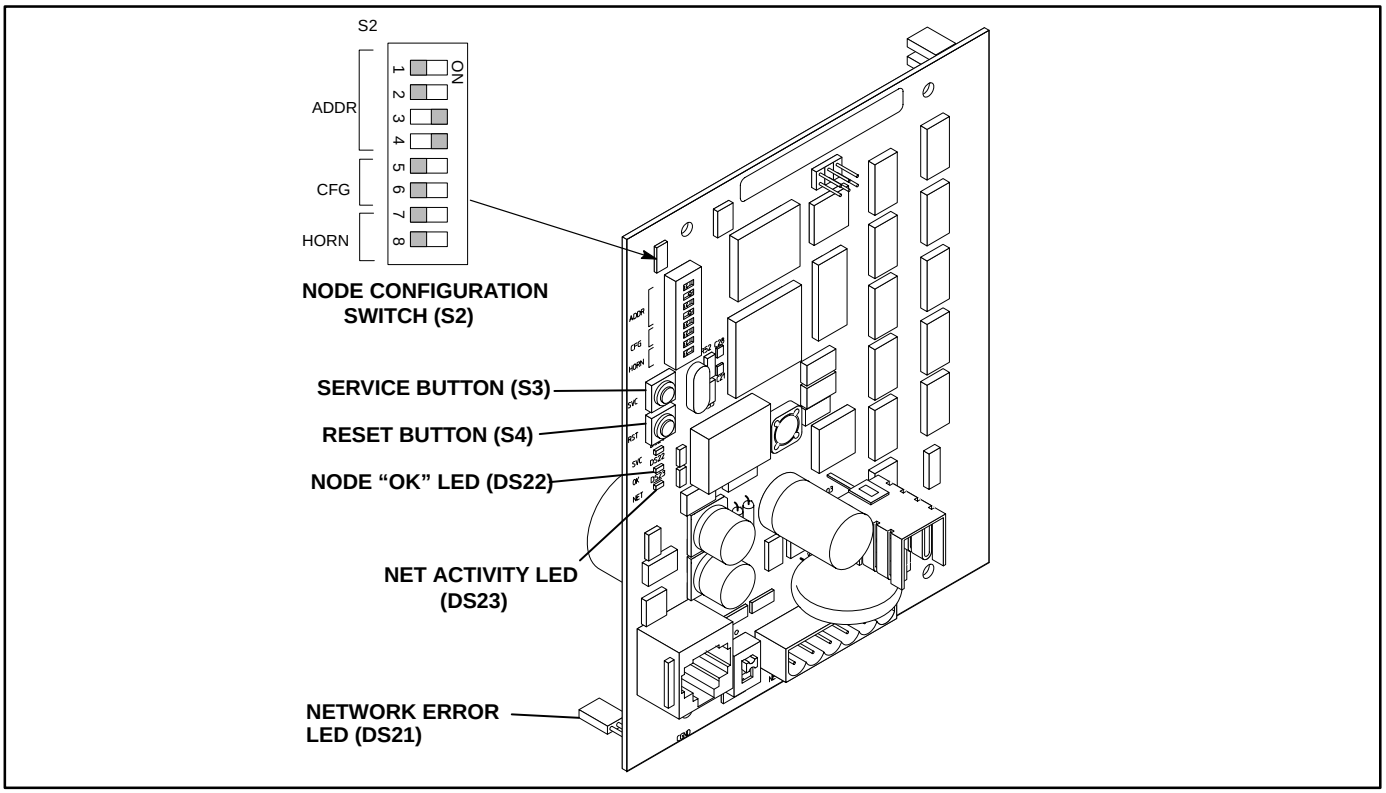

FIGURE 6. ANNUNCIATOR SWITCHES AND LEDs (EXAMPLE OF NODE ADDRESS = 3)

Annunciation Set

For self-installation, the LonWorks System Annunciator may be configured for 1 of 4 Annunciations Sets: *NFPA 110, Genset Extended* or *Genset Custom, ATS Extended*. Up to 4 Annunciators may be self-installed without requiring LonMaker. However, each Annunciator must be configured for a different *Annunciation Set* (*NFPA 110, Genset Extended, Genset Custom or ATS Extended*). See the table below to configure switches S2-5 and S2-6.

Appendix B shows the contents of each Annunciator Set.

When changing the desired *Annunciation Set*, rebind to the Genset and/or ATS to the network. See *Binding*.

TABLE 3. SETTING THE ANNUNCIATION SET

S2-5	S2-6	ANNUNCIATION SET	CONFIG. VALUE*
OFF	OFF	NFPA 110	0
OFF	ON	Genset Extended	1
ON	OFF	Genset Custom	2
ON	ON	ATS Extended	3

*Note: Annunciation Set Configuration flashes out the value shown at the end of the Lamp Test.
Refer to *Appendix B* to see annunciation set functions.

Lamps

The lamps are **not** configurable when the Annunciator is self-installed. They are fixed based on the Annunciator Set chosen. See *Appendix A* for default lamp configurations.

Horn

Switch S2-7 enables the horn (see Figure 6). If enabled, switch S2-8 is used to control the horn volume. The horn settings take place immediately and the node does not have to be reset.

TABLE 4. HORN SETTINGS

S2-7	S2-8	HORN
OFF	OFF	Disabled
ON	OFF	Enabled − *Soft*
ON	ON	Enabled − *Loud*

Logical Installation

After configuring S2 as desired and the Annunciator is *physically* connected to the Genset and/or ATS, the Annunciator is ready to be *logically* connected to a Genset and/or ATS. Logically connecting to another device is referred to as *binding*. Binding may be done at any time after all nodes are installed, connected, and powered.

1. Make sure the Annunciator, Genset, and/or ATS LonWorks modules are all powered and all are connected to the twisted-pair data bus.
2. Make sure S2-1, S2-2, S2-3, and S2-4 on the Annunciator are configured for the desired address. Each device on the network must have a unique address.
3. Make sure S2-5 and S2-6 are configured for the desired annunciation. Each Annunciator on the network must be configured differently.
4. Make sure S2-7 and S2-8 on the annunciator are configured for the desired horn settings.
5. Install the front panel assembly into the enclosure or panel.
6. The front panel *Network Status* lamp should be on (amber) indicating it is powered but not bound.
7. Press and hold the Service button (S3) (see Figure 6) until the *Network Status* lamp (see Figure 1) begins flashing (amber).
8. Release the Service button.

At this time, the Annunciator will self-install and bind to the Genset and/or ATS. If it is able to bind to either a Genset or ATS, the *Network Status* lamp turns green. If no Genset or ATS devices are detected, the lamp remains amber. If lamp remains amber, verify data connections to Genset and/or ATS.

Binding Sequence

Logically connecting to another device is referred to as *binding*. *Binding* may be done when all the nodes are installed, connected, and powered.

Binding the node must occur in the proper sequence. Logically install the genset first, followed by

the transfer switch, and then the annunciator(s) and other network accessories.

NOTE: The Genset and ATS must be Cummins Power Generation (CPG) devices that are able to self-install in the network. Each device on the network must have a unique address.

Verify Binding

To verify the genset has installed itself properly and is bound to the ATS, disconnect the J1 data cable from the engine interface board. The “Network Error” LED (DS21) (see Figure 6) should turn on (red) within 10 seconds. This indicates communications have failed and that the device was properly bound.

Reconnect the twisted pair cable and confirm that DS21 turns off within ten seconds.

Removing Bindings

If unresolved system errors occur, the bindings can be removed and then re-installed to reset the system. The bindings can also be removed if the network is being changed or the device is being moved to another network.

To remove all bindings from the device, change the *Node Address* (S2) to 0 (zero) and logically re-install the device.

The node will remove all bindings at this time, including the genset and annunciator bindings. The NODE “OK” LED (DS22) will not flash when the *Node Address* is 0, nor will it attempt to bind to a genset.

Re-Binding

Re-Binding the node must occur in the proper sequence. Logically install the genset first, followed by the transfer switch, and then the annunciator(s), DIMs, and other network accessories.

To re-bind an annunciator, DIM, or ATS to the genset node, press and hold the Service pin for two seconds.

LONMAKER INSTALLATION

The LonWorks System Annunciator can be installed with LonMaker. The CPG Device Stencil is required. To install with LonMaker:

1. Run **LonMaker**. Refer to the *PowerCommand Network Installation and Operation Manual* (900−0529).
2. Open the Device Stencil.
3. Create a new site (or update an existing site).
4. Define, install and bind devices.
5. Verify system operation.

The Annunciator is defined and installed like any other device in LonMaker.

Network Variables

The Annunciator lamps may be controlled in a number of ways. They may be individually controlled with one binding for one lamp or they may be controlled in groups of 16, 8, or 4. Table 5 shows possible bindings to the various Annunciator inputs. Any combination may be used.

Example

A single annunciator is used to show the status of 2 Gensets and the source status of an ATS. Using LonMaker, the bindings shown in Figure 7 could be made to accomplish this.

TABLE 5. NETWORK VARIABLES WITH TYPICAL SYSTEM BINDINGS

NETWORK VARIABLE	TYPE	LAMP(S)	TYPICAL BINDINGS	
			GENSET	ATS
nvi16PointAnnunA	SNVT_state	1 ... 16	*nvoAnnunNFPA110* *nvoAnnunCustom* *nvoAnnunExtended*	
nvi16PointAnnunB	SNVT_state	1 ... 16		*nvoAnnunNFPA110* *nvoAnnunExtended*
nvi8PointAnnunA *nvi8PointAnnunB*	SNVT_state	1 ... 8 9 ... 16	*nvoAnnun8Point*	*nvoAnnun8Point*
nvi4PointAnnunA *nvi4PointAnnunB* *nvi4PointAnnunC* *nvi4PointAnnunD* *nvi4PointAnnunE*	SNVT_state	1 ... 4 5 ... 8 9 ... 12 13 ... 16 17 ... 20	*nvoAnnun4Point* *nvoAnnunCustom*[2]	*nvoAnnun4Point*
nviLamp [0 .. 20]*	SNVT_switch	1 ... 20	*nvoCustomStatus [0 .. 7]* *nvoFaultStatus* *nvoNotInAuto* *nvoRunStatus*	*nvoFaultStatus* *nvoNotInAuto* *nvoSrc1Available* *nvoSrc1Connected* *nvoSrc2Available* *nvoSrc2Connected* *nvoTestStatus*

*Note1 nviLamp 0 is not used

Note2 nvoAnnunCustom is autobound to nvi4PointAnnunE in NFPA 110 annunciation set for PCC 2100 and PCC 3200 only. Only the first four events of nvuAnnunCustom are used.

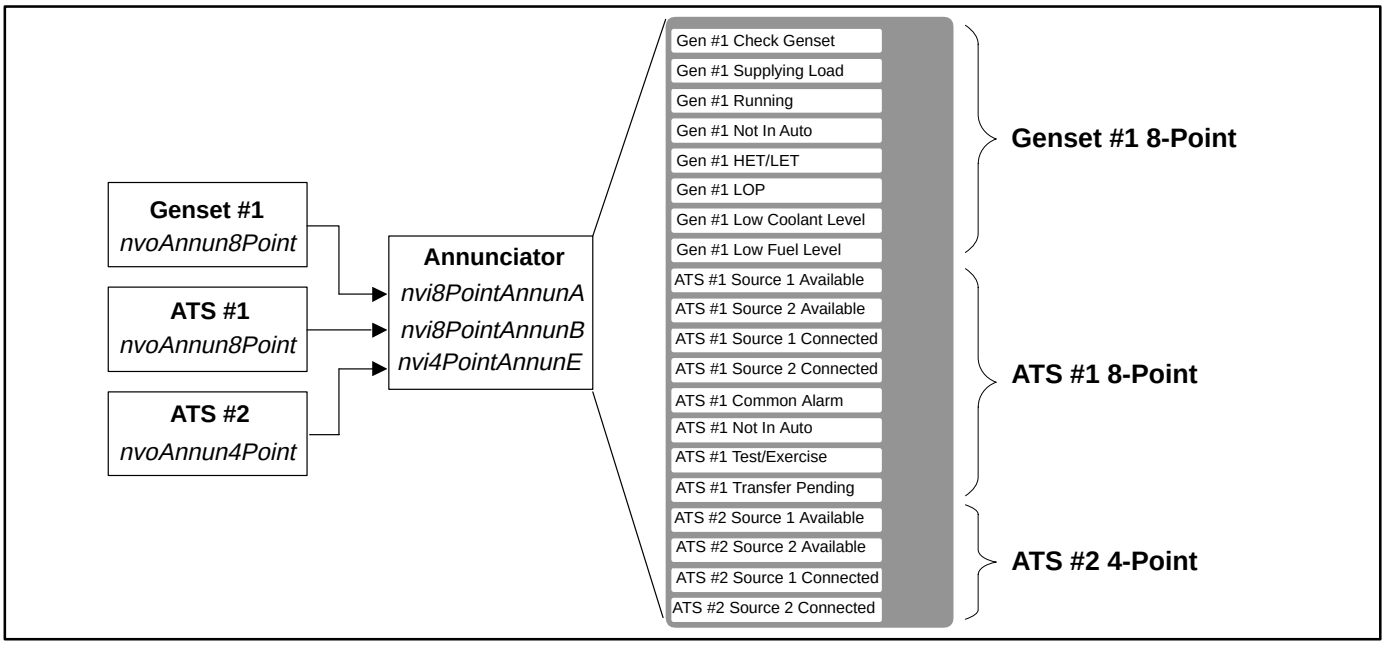

FIGURE 7. EXAMPLE SYSTEM BINDINGS

Configuration

When the Annunciator is installed with LonMaker, only the lamps and horn may be configured. LonMaker assigns the *Node Address*, and the *Annunciation Set* is set by binding Annunciator inputs. The horn is configured using switch S2-7 and S2-8.

Status Lamps

The 20 Status lamps may be individually configured using the Annunciator Configuration Plug-In, which may be launched while running LonMaker. The lamps may be configured for *color*, *horn,* and *flash* (see Figure 8). In LonMaker, to set or change a lamp's configuration:

1. Right click on the annunciator and select "Configure" to launch the Configuration Plug-in.
2. Select the "Annunciator" tab.
3. Set "Color," "Horn," and "Flash" for each lamp (see Figure 8).
4. Select "Apply" to activate the changes.
5. Select "OK" to exit.

Changes will take effect immediately. The *Network Status* lamp cannot be configured.

If you are installing additional annunciators, the lamp configurations can be saved (File → Save) and applied to any or all of the annunciators.

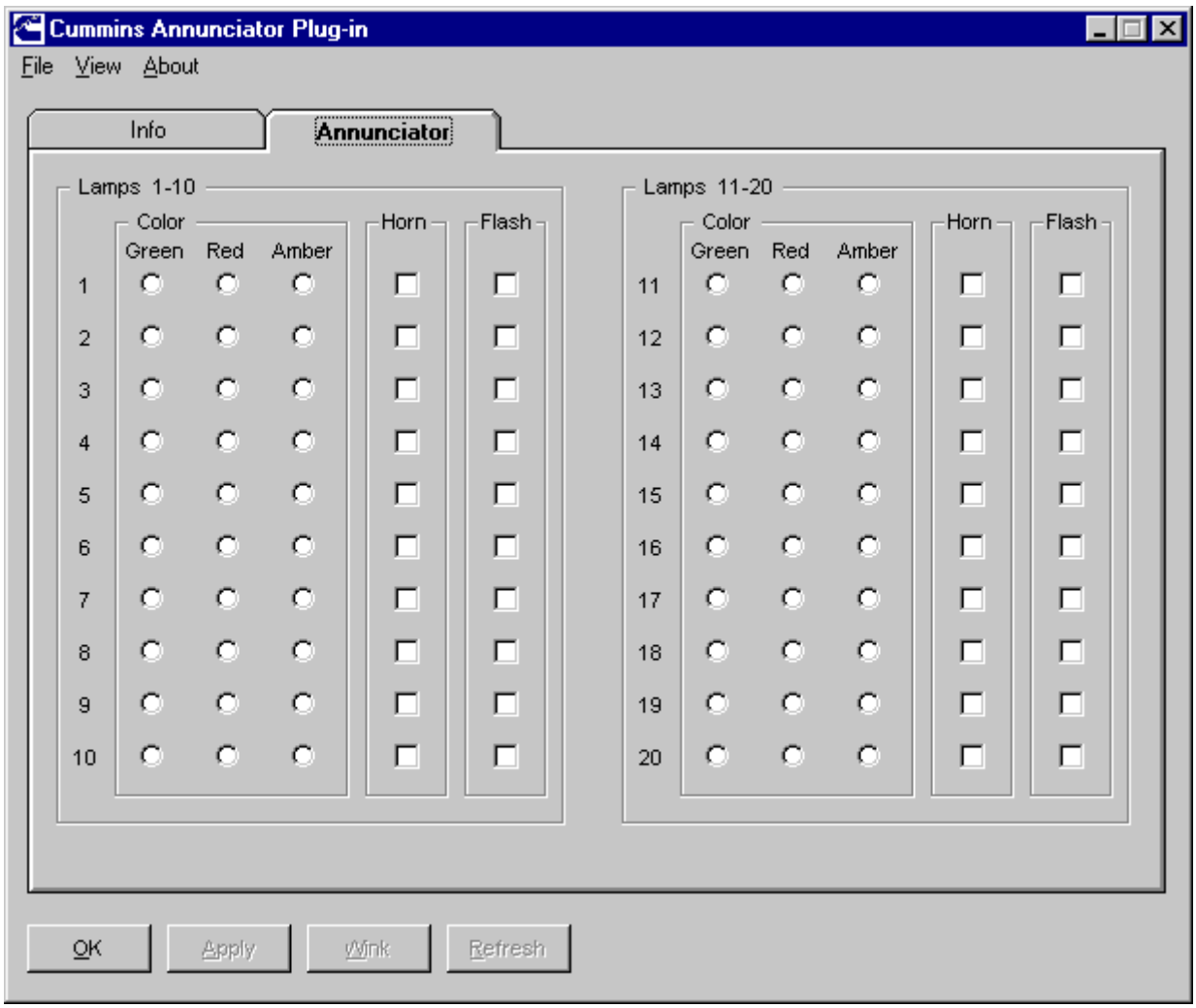

FIGURE 8. CONFIGURING ANNUNCIATOR LAMPS IN LONMAKER

Operation

Status Lamps

A lamp that is steady-on green or steady-on amber with no alarm indicates normal operation. Amber lamps with a sounding alarm are alerting to potential problems with the Genset. Steady-on or flashing red lamps with an alarm indicate a problem with the Genset or ATS that requires immediate attention.

Horn

Switch S2-7 enables the horn. If enabled, switch S2-8 is used to control the horn volume. The horn settings take place immediately and the node does not have to be reset.

TABLE 6. HORN SETTINGS

S2-7	S2-8	HORN
OFF	OFF	Disabled
ON	OFF	Enabled − *Soft*
ON	ON	Enabled − *Loud*

Silence/Lamp Test

The *Silence/Lamp Test* button on the front panel may be used to:

- Silence an alarm
- Test the lamps

If the horn is on, pressing the *Silence/Lamp Test* button will silence the horn. The horn will not turn on again until another alarm condition is present.

When the horn is off, pressing the *Silence/Lamp Test* button triggers a lamp test in which the annunciator cycles all lamps (green, red, amber) On and Off (500ms each); then returns to normal operation.

NOTE: When self-installed, the *Silence/Lamp Test* button can be used to initiate the “Binding” process. Refer to page 9.

Network Status Lamp

The front panel *Network Status* lamp indicates the status of communications with all devices “bound” to the Annunciator. If communications have failed at any input, the *Network Status* lamp flashes red and the horn will activate (if enabled). The lamp remains flashing red until communication with all devices has been restored.

The *Network Activity* LED (DS23) pulses whenever an update has been received by the Annunciator. When the Annunciator is bound, the *Network Activity* LED pulses regularly, indicating that updates are being received from the network. The location of DS23 is shown in Figure 6.

TABLE 7. NETWORK STATUS LAMP INDICATIONS

NETWORK STATUS LAMP	INDICATION
Off	No power or unit failure.
Amber	No inputs are “bound”.
Green	Annunciator is “bound” and all inputs are functioning normal.
Red − Flashing	Annunciator is “bound” but at least one device is not communicating.

THIS PAGE INTENTIONALLY LEFT BLANK

Troubleshooting

WARNING ***Many troubleshooting procedures present hazards that can result in severe personal injury or death. Only trained and experienced service personnel with knowledge of high voltage power generating systems should perform service procedures.***

PRE-CHECKS

Annunciator

Verify that the power supply voltage is between 8 and 30 VDC at the network annunciator terminal strip J1. Refer to Figure 5 for wiring connection information.

Reset the node to make sure selections have been activated (S4).

Verify the “OK” LED (DS22) is flashing at 1 Hz. (If self-installed it will flash the *Node Address*.)

If bound, verify the “NET” LED (DS23) flashes periodically.

Verify the horn is configured as desired.

Installation

Verify each device on the network has a unique *Node Address* by counting pulses of the “OK” LED.

Verify the correct *Annunciation Set* has been selected (S2-5 and S2-6).

Verify Annunciator is bound. The *Network Status* lamp is green when bound. Press and hold the *Silence/Lamp Test* button or service pin for 2 seconds to bind or rebind.

Network

Verify power at each device (varies by device).

Verify data bus is securely connected at each device and the network is properly terminated at one point.

Verify that the distance between any two nodes on a channel and the termination does not exceed 1312 feet (400 meters) and the total amount of wire in a channel does not exceed 1640 feet (500 meters).

TROUBLESHOOTING

Status Lamps

Some or all lamps fail to light:

- Verify power to node is acceptable.
- Verify *Node Status* lamp is green. (Indicates all bindings are functioning).
- Verify node is reinstalled after changing *Annunciation Set.*
- Verify correct *Annunciation Set* (self-installation only) has been selected. Annunciation Set Configuration flashes out the value shown at the end of the Lamp Test (refer to Table 3).

Lamps are wrong color:

- If self-installed, lamp color cannot be changed.
- If installed using LonMaker, configure lamp as desired using the Annunciator Configuration Plug-in.

Network Status Lamp

Off

- Node has no power or has failed.

Amber

- Node has power but is not bound. Bind Annunciator, either with LonMaker or *Silence/Lamp Test* button or service pin.

Flashing Red

- Communications to at least one input has failed.
- Verify “NET ACTIVITY LED” (DS23) is pulsing about once every 5 seconds.
- Verify all external devices are powered and connected.
- If an external device has been replaced or removed from the system, re-bind the Annunciator.

Silence/Lamp Test Button

Lamp Test occurs each time the generator starts:

- Input voltage is dropping below 8 VDC, causing the Lamp Test. This is normal operation and no corrective action is required.

Lamp Test fails to complete:

- Annunciator is too far from power source. Decrease distance or increase gauge of power wiring.

Lamp Test fails to sound horn:

- Verify the horn is enabled (S2-7).

Cannot silence or run Lamp Test:

- Verify ribbon cable to J3 of PCB is connected. Short leads of J3 to test. If fails, replace the Annunciator.

Horn

Horn is off when lamp lights

- Verify the horn is enabled (S2-7).
- If self-installed, individual horn settings are not configurable.
- If installed with LonMaker, configure lamp as desired using the Annunciator Configuration Plug-in.

Horn is too loud/soft:

- Verify the horn volume is set as desired (S2-8).

LonMaker

Cannot communicate after installing:

Cannot view lamp configuration:

- Set *nviMfgTest* = 6 to activate all *Status* lamps in their configured state.

Parts Information

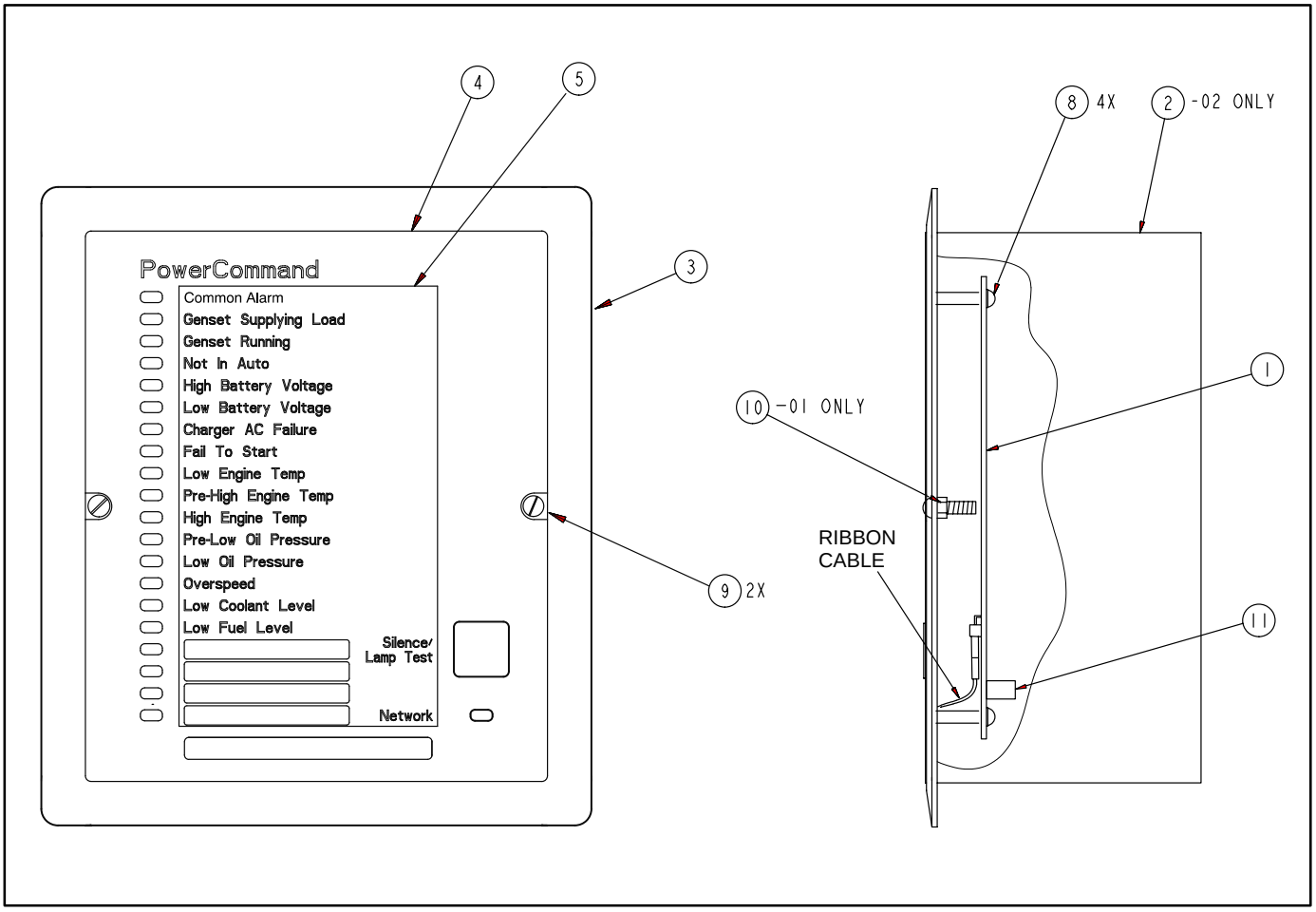

FIGURE 9 ANNUNCIATOR ASSEMBLY. 300−5637

REF NO.	PART NO.	QTY USED	PART DESCRIPTION
			Kit, Annunciator
	541−0814−01	1	Panel Mount
	541−0814−02	1	Enclosure Mount
			Annunciator Assembly
	300−5637−01	1	Panel Mount
	300−5637−02	1	Enclosure Mount
1	327−1309	1	PCB, Annunciator Assembly
2	301−3090	1	Control Box (-02 only)
3	319−4182−02	1	Panel, Face Plate
4	300−5338	1	Panel, Membrane
5			Insert, NFPA 110
	098−8019−01	1	English
	098−8019−02	1	Spanish
8	815−0947	4	Screw PRHMS; M3 x 1/2 x 10
9	822−2160−12	2	Screw, Blk, 6−32 x 1/2
10	870−0183	2	Nut, Hex; 6−32 (-01 only)
11	323−1678−05	1	Connector, 5-Pin, Black (J1)

THIS PAGE INTENTIONALLY LEFT BLANK

Appendix A – Default Lamp Settings

Self-Installed Lamp Settings

When the Annunciator is self-installed, the lamps are not configurable. The default lamp configurations are shown below. When LonMaker is used to install the Annunciator, the lamps default to the NFPA 110 settings, but may be reconfigured.

LAMP SETTINGS

	NFPA 110		GENSET EXTENDED		GENSET CUSTOM		ATS EXTENDED	
S2 SWITCH SETTING	S2-5 OFF	S2-6 OFF	S2-5 OFF	S2-6 ON	S2-5 ON	S2-6 OFF	S2-5 ON	S2-6 ON
LAMP	**COLOR**	**HORN**	**COLOR**	**HORN**	**COLOR**	**HORN**	**COLOR**	**HORN**
1	Red	No	Red*	Yes	Red	Yes	Green	No
2	Amber	No	Amber	Yes	Red	Yes	Amber	No
3	Green	No	Red	Yes	Red	Yes	Green	No
4	Red*	Yes	Red	Yes	Red	Yes	Amber	No
5	Amber	Yes	Red	Yes	Red	Yes	Red*	Yes
6	Amber	Yes	Amber	Yes	Red	Yes	Red*	Yes
7	Amber	Yes	Red	Yes	Red	Yes	Amber	No
8	Red	Yes	Red	Yes	Red	Yes	Red	Yes
9	Amber	Yes	Red	Yes	Red	Yes	Amber	No
10	Amber	Yes	Red	Yes	Red	Yes	Amber	No
11	Red	Yes	Amber	Yes	Red	Yes	Amber	No
12	Amber	Yes	Red	Yes	Red	Yes	Red	Yes
13	Red	Yes	Red	Yes	Red	Yes	Red	Yes
14	Red	Yes	Red	Yes	Red	Yes	Red	Yes
15	Red	Yes	Red	Yes	Red	Yes	Amber	No
16	Amber	Yes	Red	Yes	Red	Yes	Amber	No
17	Green	Yes	Red	Yes	Red	Yes	Red	Yes
18	Amber	Yes	Red	Yes	Red	Yes	Red	Yes
19	Amber	Yes	Red	Yes	Red	Yes	Red	Yes
20	Red	Yes	Red	Yes	Red	Yes	Red	Yes

*Flashing

Indicates default settings for LonMaker installation

THIS PAGE INTENTIONALLY LEFT BLANK

Appendix B – Annunciator Set Functions

Genset Annuciation Sets

The following Annunciator Sets are available for the Genset*.

NFPA 110	FAULT CODE	EXTENDED	CUSTOM**	8-POINT	4-POINT
Common Alarm	1483	Check Genset	User-defined Fault 1	Check Genset	Check Genset
Genset Supplying Load	2333	Ground Fault	User-defined Fault 2	Genset Supply-ing Load	Genset Supplying Load
Genset Running	1465	High AC Voltage	User-defined Fault 3	Genset Running	Genset Running
Genset Not In Auto	1463	Low AC Voltage	User-defined Fault 4	Not In Auto	Not In Auto
High Battery	442	Under Frequency	User-defined Fault 5	High/Low Engine Temp	
Low Battery	441	Overload	User-defined Fault 6	Low Oil Pressure	
Charger AC Failure	1311 or 1312	Overcurrent	User-defined Fault 7	Low Coolant Level	
Fail To Start	359	Short Circuit	User-defined Fault 8	Low Fuel Level	
Low Engine Temp	1435	Reverse kW	User-defined Fault 9		
Pre-High Engine Temp	146	Reverse kVAR	User-defined Fault 10		
High Engine Temp	151	Fail to Sync	User-defined Fault 11		
Pre-Low Oil Pressure	143	Fail to Close	User-defined Fault 12		
Low Oil Pressure	415	Load Demand	User-defined Fault 13		
Overspeed	234	Genset CB Tripped	User-defined Fault 14		
Low Coolant Level	197	Utility CB Tripped	User-defined Fault 15		
Low Fuel Level	1439 (Day Tank) or 1441 (Main Tank)	Emergency Stop	User-defined Fault 16		

* A CCM-G does not support a Genset Extended Annunciation set.
** Must be set for Genset/ATS with InPower

ATS Annunciation Sets

The following Annunciator Sets are available for the ATS.

NFPA 110	EXTENDED	8-POINT	4-POINT
Common Alarm	Source1 Available	Source1 Available	Source1 Available
Genset Supplying Load	Source2 Available	Source2 Available	Source2 Available
	Source1 Connected	Source1 Connected	Source1 Connected
ATS Not In Auto	Source2 Connected	Source2 Connected	Source2 Connected
	Check ATS	ATS Common Alarm	
	ATS Not In Auto	ATS Not In Auto	
Charger AC Failure	Test/Exercise	Test/Exercise	
	Low ATS Battery	Low ATS Battery	
	Load Shed		
	Transfer Inhibit		
	Retransfer Inhibit		
	Fail To Close		
	Fail To Disconnect		
	Fail To Sync		
	Bypass to Source 1		
	Bypass to Source 2		

Appendix C − Custom Inserts

Creating Custom Inserts

A custom insert can be created by using a table in Microsoft Word. To create a custom insert:

1. Create a table in a Word document as follows (See Figure C−1):

Column 1:	1.9”
Column 2:	0.9”
Rows 1−20, 22:	18pt
Row 21:	10pt
Merge:	Row 22 (after setting column widths)

2. Recommended Font: Arial 12 pt, bold

3. Enter description for each lamp.

4. If possible, print directly to a transparency.

   [Or, print to paper and use a copy machine to transfer to a transparency.]

5. Insert standard NFPA 110 insert backwards to show “blank” side.

6. Insert transparency in front of the “blank” insert.

7. Align as needed.

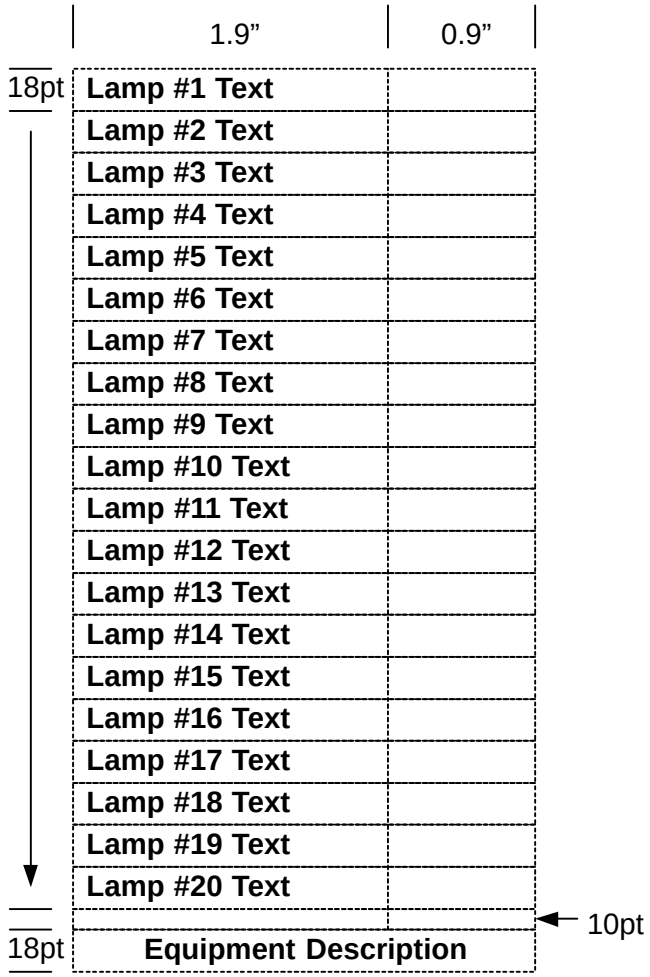

FIGURE C−1. CUSTOM INSERT

THIS PAGE INTENTIONALLY LEFT BLANK

Cummins Power Generation
1400 73rd Avenue N.E.
Minneapolis, MN 55432
1-800-888-6626
763-574-5000 International Use
Fax: 763-528-7229

Cummins is a registered trademark of Cummins Inc.

Power Generation