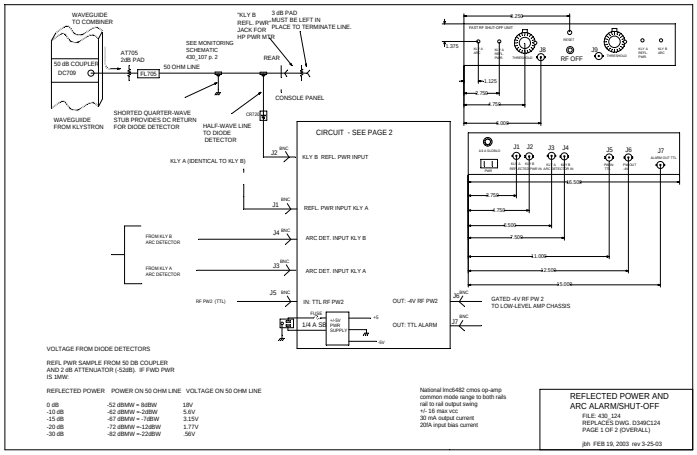

VOLTAGE FROM DIODE DETECTORS

REFL PWR SAMPLE FROM 50 DB COUPLER AND 2 dB ATTENUATOR (-52dB). IF FWD PWR IS 1MW:

REFLECTED POWER	POWER ON 50 OHM LINE	VOLTAGE ON 50 OHM LINE
0 dB	-52 dBMW = 8dBW	18V
-10 dB	-62 dBMW = -2dBW	5.6V
-15 dB	-67 dBMW = -7dBW	3.15V
-20 dB	-72 dBMW = -12dBW	1.77V
-30 dB	-82 dBMW = -22dBW	.56V

National lmc6482 cmos op-amp
common mode range to both rails
rail to rail output swing
+/- 16 max vcc
30 mA output current
20A input bias current

REFLECTED POWER AND ARC ALARM/SHUT-OFF
FILE: 430_124
REPLACES DWG. D349C124
PAGE 1 OF 2 (OVERALL)

jbh FEB 19, 2003 rev 3-25-03

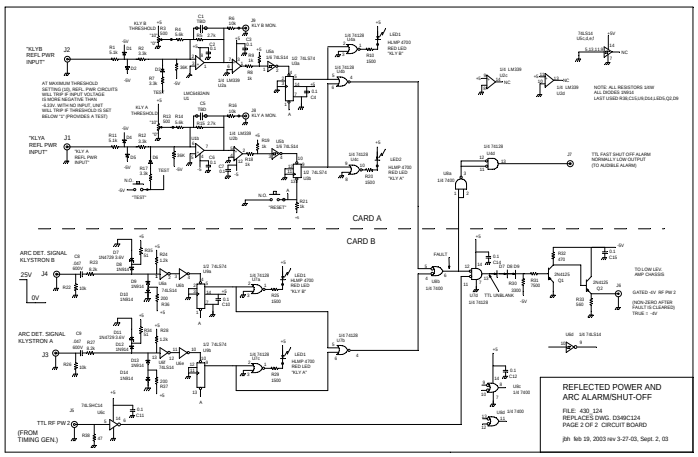

REFLECTED POWER AND ARC ALARM/SHUT-OFF
FILE: 430_124
REPLACES DWG. D349C124
PAGE 2 OF 2 CIRCUIT BOARD

jbh feb 19, 2003 rev 3-27-03, Sept. 2, 03